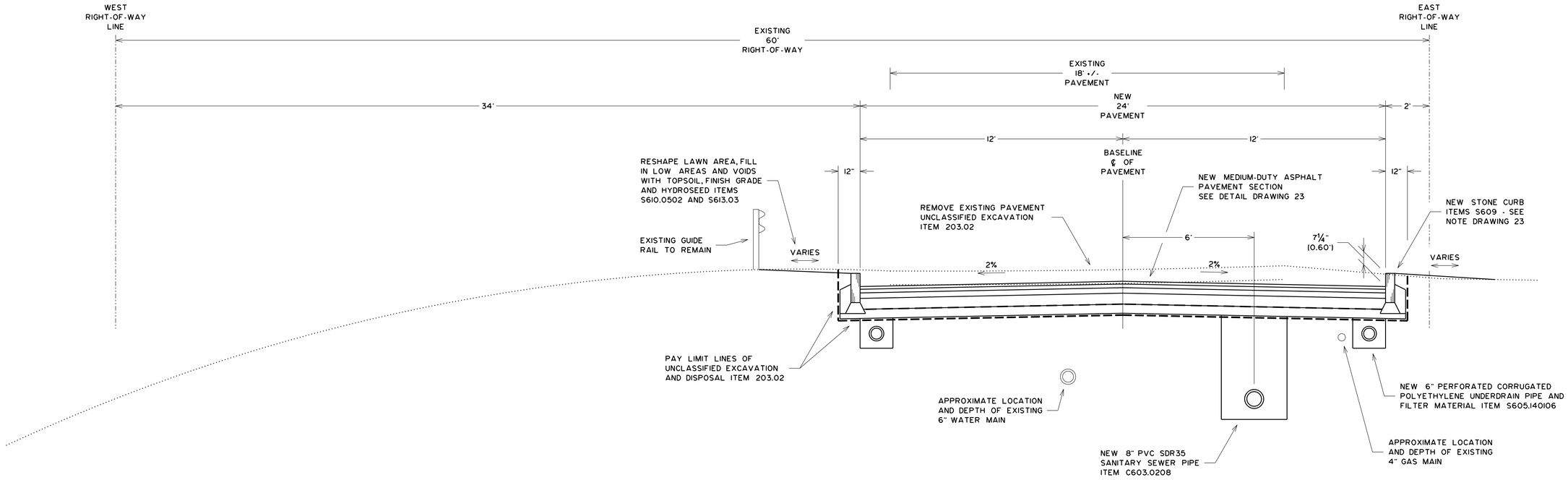

RUGGLES STREET
SOUTH END TO FLEMING STREET

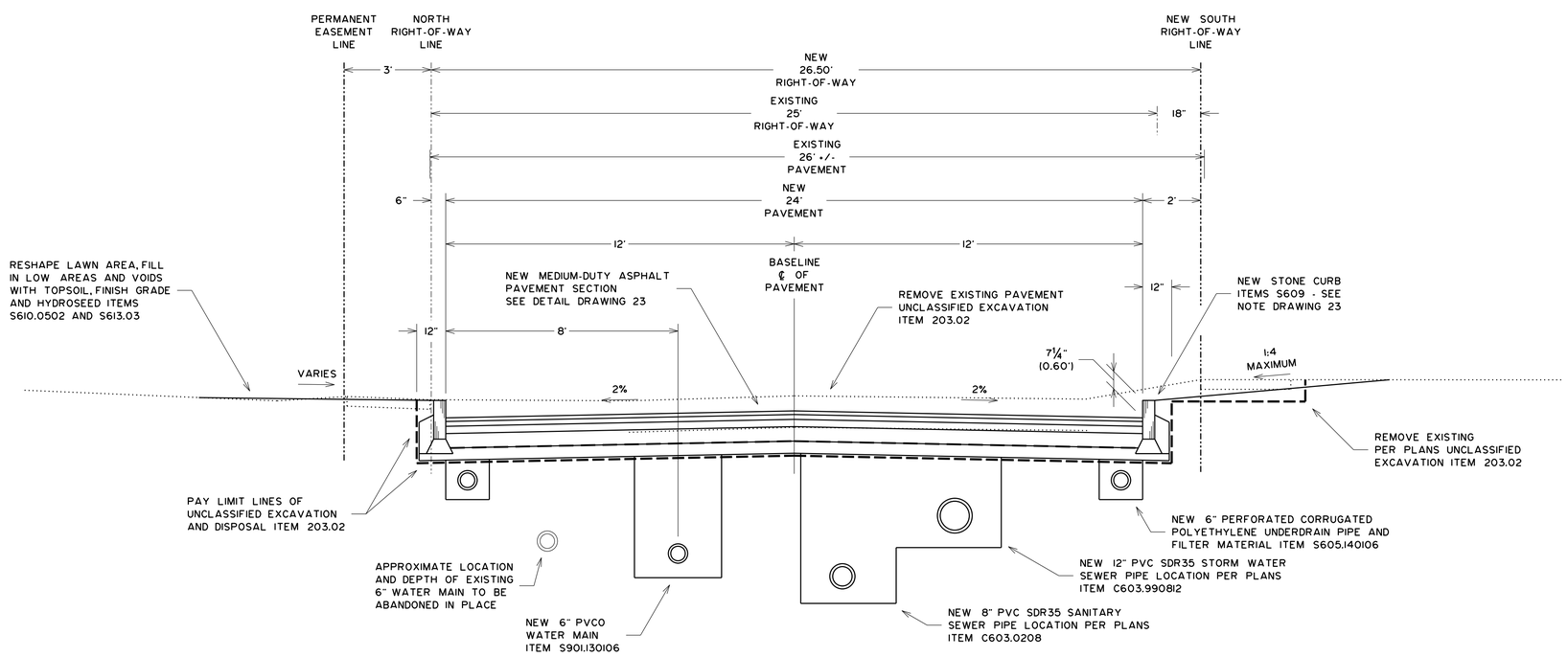

FLEMING STREET
RUGGLES STREET TO STATION RF12+80

Department of Environmental Services
Architecture and Engineering Services
City of Rochester, New York

MANAGING ENGINEER ALBERT J. GIGLIO, P.E.
CITY ENGINEER JAMES R. McINTOSH, P.E.

PROJECT TITLE
STREET IMPROVEMENT PROGRAM
HINCHER GROUP

NO.	REVISION	BY	DATE

ISSUED JUNE 1, 2015
CHECKED LYR
DRAWN RKS
DESIGN LYR
SCALE NONE
PROJECT NUMBER 12109

DRAWING TITLE
TYPICAL SECTION
RUGGLES STREET
FLEMING STREET

DRAWING NO.
18
OF
50