CONTRACT DRAWINGS FOR

WESTFALL ROAD IMPROVEMENTS (CR 239)

PHASE III - EAST HENRIETTA ROAD TO LAC-DE-VILLE BOULEVARD

CITY OF ROCHESTER, NEW YORK
TOWN OF BRIGHTON, NEW YORK
NYSDOT P.I.N. 4753.77
CAPITAL IMPROVEMENT PROJECT No. 1409
PROJECT LENGTH = 1.2 MILES

LOCATION MAP
1"=1.5 MILES (FULL SIZE)

"I hereby certify by my signature and seal below, that I have prepared this record drawing which is, to the best of my knowledge and in my professional opinion, a true representation of the work as constructed on the Westfall Road Improvements Phase III, Project No. 1409."

STATE OF NEW YORK · MATTHEW J. SCHOLLY · LICENSED PROFESSIONAL ENGINEER · No. 069983

COMPLETED CONSTRUCTION DRAWINGS

NYSDOT STANDARD SHEETS:

204-01, 209-01, 209-02, 209-03, 209-04, 603-02 603-04, 604-02, 608-03, 608-04, 608-05, 608-06, 619-02, 619-04, 619-10, 619-50, 619-51, 625-01, 655-04, 670-01, 670-02, 670-03, 680-01, 680-03, 680-04, 680-06, 680-08, 680-17

PREPARED FOR	PREPARED BY
MONROE COUNTY DEPARTMENT OF TRANSPORTATION CITY PLACE, SUITE 6100 50 WEST MAIN STREET ROCHESTER, NEW YORK, 14614-1231	Barton & Loguidice, P.C. Engineers · Environmental Scientists · Planners · Landscape Architects

INDEX

SHEET NUMBER	DESCRIPTION	DRAWING NUMBER
1	TITLE SHEET	COVER
2	INDEX & ABBREVIATIONS	IN-1
3	LEGEND & LINE SYMBOLOGY	L-1
4	LEGEND & POINT SYMBOLOGY	L-2
5-10	TYPICAL SECTIONS	TS-1 TO TS-6
11-12	ESTIMATE OF QUANTITIES	EQ-1 TO EQ-2
13-15	GENERAL NOTES	GN-1 TO GN-3
16-18	ROADWAY ALIGNMENT GEOMETRY	BT-1 TO BT-3
19-20	BASELINE TIES AND BENCH MARKS	BT-4 TO BT-5
21-24	WORK ZONE TRAFFIC CONTROL PLAN	MPT-1 TO MPT-4
25	WORK ZONE TRAFFIC CONTROL DETOUR PLAN	DET-1
26-28	MISCELLANEOUS TABLES	MT-1 TO MT-3
29-33	DRAINAGE TABLES	DT-1 TO DT-5
34-50	MISCELLANEOUS DETAILS	MD-1 TO MD-14
51	LANDSCAPING PLAN	LS-1
52-54	EROSION CONTROL PLAN	ECP-1 TO ECP-3
55-70	PLANS	PL-1 TO PL-16
71-82	PROFILES	PR-1 TO PR-12
83	INTERSECTION GRADING PLAN	IG-1
84-99	SIGNING & PAVEMENT MARKING PLAN	SPM-1 TO SPM-16
100-102	SIGNING & PAVEMENT MARKING DETAILS	SPM-17 TO SPM-19
103-106	TRAFFIC SIGNAL PLAN	TSP-1 TO TSP-4
107-109	TRAFFIC SIGNAL DETAILS	TSP-5 TO TSP-7
110-112	MAINTENANCE JURISDICTION PLANS	MJP-1 TO MJP-3

ALIGNMENT

ABBR.	DESCRIPTION
AH	AHEAD
AZ	AZIMUTH
BK	BACK
b	BASELINE
BRG	BEARING
c	CENTERLINE
CS	CURVE TO SPIRAL
e	SUPERELEVATION RATE (CROSS SLOPE)
EQ	EQUALITY
EXT	EXTERNAL
HCL	HORIZONTAL CONTROL LINE
HSD	HEADLIGHT SIGHT DISTANCE
L	LENGTH OF CIRCULAR CURVE
LS	LENGTH OF SPIRAL
LVC	LENGTH OF VERTICAL CURVE
E	CENTER CORRECTION OF VERTICAL CURVE
f	MAIN LINE
PC	POINT OF CURVATURE
PI	POINT OF INTERSECTION
POL	POINT ON LINE
PSD	PASSING SIGHT DISTANCE
PT	POINT OF TANGENT
PVC	POINT OF VERTICAL CURVE
PVI	POINT OF VERTICAL INTERSECTION
PVT	POINT OF VERTICAL TANGENT
R	RADIUS
SC	SPIRAL TO CURVE
SSD	STOPPING SIGHT DISTANCE
ST	SPIRAL TO TANGENT
STA	STATION
T	TANGENT LENGTH
TGL	THEORETICAL GRADE LINE
TS	TANGENT TO SPIRAL
VC	VERTICAL CURVE

TOPOGRAPHY (DRAINAGE)

ABBR.	DESCRIPTION
BB	BOTTOM OF BANK (STREAM)
BC	BOTTOM OF CURB
BO	BOTTOM OF OPENING
CAP	CORRUGATED ALUMINUM PIPE
CB	CATCH BASIN
CIP	CAST IRON PIPE
c STRM	CENTERLINE OF STREAM
CMP	CORRUGATED METAL PIPE
CP	CONCRETE PIPE
CSP	CORRUGATED STEEL PIPE
CULV	CULVERT
DIA	DIAMETER
DMH	DRAINAGE MANHOLE
DS	DRAINAGE STRUCTURE PIPE
D'XING	DITCH CROSSING
EHW	EXTREME HIGH WATER
EL	ELEVATION
ELEV	ELEVATION
ELW	EXTREME LOW WATER
ES	END SECTION
HW	HEADWALL
INV	INVERT
MH	MANHOLE
MHW	MEAN HIGH WATER
OHW	ORDINARY HIGH WATER
OLW	ORDINARY LOW WATER
RCP	REINFORCED CONCRETE PIPE
SICPP	SMOOTH INTERIOR CORRUGATED POLYETHYLENE PIPE
TB	TOP OF BANK (STREAM)
TC	TOP OF CURB
TG	TOP OF GRATE
VCP	VITRIFIED CLAY PIPE

TOPOGRAPHY (MISCELLANEOUS)

ABBR.	DESCRIPTION
ABUT	ABUTMENT
AOBE	AS ORDERED BY ENGINEER
ASPH	ASPHALT
BDY	BOUNDARY
BLDG	BUILDING
BM	BENCH MARK
CC	CENTER TO CENTER
CONC	CONCRETE
CONST	CONSTRUCTION
CR	COUNTY ROAD
D	DEED DISTANCE
DM	DIRECT MEASUREMENT
DWY	DRIVEWAY
EP	EDGE OF PAVEMENT
ES	EDGE OF SHOULDER
FEE	FEE ACQUISITION
FEE WO/A	FEE ACQUISITION WITHOUT ACCESS
FP	FENCE POST
FD	FOUNDATION
FL	FENCE LINE
GAR	GARAGE
GR	GRAVEL
HO	HOUSE
HWY	HIGHWAY
IP	IRON PIN OR IRON PIPE
MB	MAILBOX
MON	MONUMENT
N&W	NAIL AND WASHER
OG	ORIGINAL GROUND
O/H	OVERHEAD
P	PARCEL
PAV'T	PAVEMENT
PE	PERMANENT EASEMENT
PED POLE	PEDESTRIAN POLE
p	PROPERTY LINE
POR	PORCH
RR	RAILROAD
RTE	ROUTE
ROW	RIGHT OF WAY
RW	RETAINING WALL
SH	STATE HIGHWAY
SHLDR	SHOULDER
SPK	SPIKE
ST	STREET
STK	STAKE
STY	STORY
SW	SIDEWALK
TE	TEMPORARY EASEMENT
TO	TEMPORARY OCCUPANCY
U/G	UNDERGROUND
WW	WING WALL

UTILITIES

ABBR.	DESCRIPTION
E	ELECTRIC
EMH	ELECTRIC MANHOLE
G	GAS
GP	GUY POLE
GSB	GAS SERVICE BOX (HOUSE LINE)
GV	GAS VALVE (MAIN LINE)
HYD	HYDRANT
LP	LIGHT POLE
LPG	LOW PRESSURE GAS
PP	POWER POLE
SA	SANITARY SEWER
SMH	SANITARY MANHOLE
ST	STORM SEWER
T	TELEPHONE
TCB	TRAFFIC CONTROL BOX
TELBOX	TELEPHONE BOX
TEL P	TELEPHONE POLE
TMH	TELEPHONE MANHOLE
CTV	CABLE TELEVISION
W	WATER
WSB	WATER SERVICE BOX (HOUSE LINE)
WV	WATER VALVE (MAIN LINE)

SUBSURFACE EXPLORATION

ABBR.	DESCRIPTION
REPLACE ABBREVIATION "AB" WITH:	
AH	HAND AUGER
CP	CONE PENETROMETER
DA	60 mm CASED DRILL HOLE
DM	DRILLING MUD
DN	100 mm CASED DRILL HOLE
FH	HOLLOW FLIGHT AUGER
PA	POWER AUGER
PH	PROBE
PT	PERCOLATION TEST HOLE
RP	25 mm SAMPLER (RETRACTABLE PLUG)
	TO BE DEFINED AT THE TIME OF EXPLORATION
SP	SEISMIC POINT
TP	TEST PIT
ABBREVIATION "C" IN CATEGORIES: DA, DM, DN, AND FH WITH:	
B	BRIDGE
C	CUT
D	DAM
F	FILL
K	CULVERT
W	WALL
X	TO BE USED IF ONE OF THE ABOVE CANNOT BE DEFINED AT THE TIME THE EXPLORATION IS MADE

NO AS-BUILT REVISIONS

NO.	DATE	BY:	REVISION

Barton & Loguidice, P.C.

DRAFTED BY: JMW/JJB

DESIGN BY: JMW

DEPARTMENT OF TRANSPORTATION
50 WEST MAIN STREET, SUITE 6100
ROCHESTER, NEW YORK 14614-1231

UNAUTHORIZED ALTERATION OR ADDITION TO THIS DRAWING IS A VIOLATION OF THE NEW YORK STATE EDUCATION LAW ARTICLE 145, SECTION 7209

PROJECT NAME: WESTFALL ROAD
LIMITS: E. HENRIETTA ROAD TO LAC-DE-VILLE BLVD
TOWN: BRIGHTON
CITY: ROCHESTER
CAPITAL PROJECT NO.: 4753.77
BRIDGE IDENTIFICATION NO.: N.A.

INDEX AND ABBREVIATIONS

SCALE: NOT TO SCALE
DATE ISSUED: 4/25/2014
DRAWING NO. IN-1
SHEET NO. 2 OF 112

mek
I:\MicroStation\Workspace\PLOT\NYSDOT\NYSDOT_SIZE_B.TBL
I:\MicroStation\Workspace\Plot\NYSDOT\NYSDOT_HPLJ5200_B.plt
FILE NAME = I:\Shared\1000\1066005\AS-BUILTS\1066005_in_01.dgn
DATE = 4/25/2014
TIME = 9:39:43 AM

ALIGNMENT

STYLE	NAME	DESCRIPTION
	AC	CONTROL (CENTERLINE)
	AD_P	DETOUR
	AT_P	TRANSITION CONTROL

BRIDGE

STYLE	NAME	DESCRIPTION
	BR	RAIL
	BSHT	SHEET PILING

CONTROL

STYLE	NAME	DESCRIPTION
B	CB	BASELINE
	CBPR	BASELINE, PROJECTION

DRAINAGE

STYLE	NAME	DESCRIPTION
ST	DCP	CULVERT PIPE
ST	DCP_P	CULVERT PIPE (DIR)
	DDG_P	DITCH, GRASS LINED
	DDP_P	DITCH, PAVED INVERT
	DDS_P	DITCH, STONE LINED
	DFL_P	FLOW LINE
	DSSD	SLOTTED DRAIN

ENVIRONMENTAL

STYLE	NAME	DESCRIPTION
	EBLHS	BALE, STRAW
	ECT	CURTAIN, TURBIDITY
	EDMC	DAM, COFFER TYPE
	EDMEC_P	DAM, EARTHEN, CHECK
	EDMPC_P	DAM, PREFAB, CHECK
	EDMSC_P	DAM, STONE, CHECK
	EFNS	FENCE, SILT
	EFNSV	FENCE, SILT & VEGETATION
	EFNV	FENCE, VEGETATION
AA	EWAA_P	WETLAND, ADJACENT AREA
FW	EWF	WETLAND, FEDERAL
FW SW	EWFS	WETLAND, FEDERAL AND STATE
WM	EWM	WETLAND, MITIGATION AREA
SW	EWS	WETLAND, STATE

SIGNS

STYLE	NAME	DESCRIPTION
	SBLB	BILLBOARDS
	SM	MULTIPLE POST
	SSO	STRUCTURE, OVERHEAD
	SSOC	STRUCTURE, OVHD. CANTILEVER

LANDSCAPE

STYLE	NAME	DESCRIPTION
	LABL	AREA, BRUSH LINE
	LAHR	AREA, HEDGE ROW
	LAPB	AREA, PLANTING BED
	LAWA	AREA, WOODED AREA OUTLINE
	LAWE	AREA, WATERS EDGE
	LCUT_P	CUT LIMIT
	LFILL_P	FILL LIMIT
	LFNC	FENCE
	LTRC	TREE ROW, CONIFEROUS
	LTRD	TREE ROW, DECIDUOUS
	LWH	WALL, H PILE
	LWR	WALL, RETAINING
	LWS	WALL, STONE

ROW MAPPING

STYLE	NAME	DESCRIPTION
	MDL	DEED LINE
PE	MEE	EASEMENT, PERMANENT, EXISTING
PE	MEP_P	EASEMENT, PERMANENT, PROPOSED
APE	MEPA_P	EASEMENT, PERMANENT, APPROX. EXISTING
TE	MET_P	EASEMENT, TEMPORARY, PROPOSED
ATE	META_P	EASEMENT. TEMPORARY, APPROX. EXISTING
FEE	MF_P	FEE ACQUISITION, W/ ACCESS PROPOSED
HB	MHB	HIGHWAY BOUNDARY
AHB	MHBA	HIGHWAY BOUNDARY, APPROX.
	MHBW	HWY BOUNDARY, FACE OF WALL
HB W/OA	MHBWOA	HIGHWAY BOUNDARY, W/O ACCESS
	MJC	JURISDICTION, CITY
	MJCY	JURISDICTION, COUNTY
	MJHD	JURISDICTION, HISTORIC DISTRICT
	MJLL	JURIS., (GREAT, MILITARY) LOT LINE
	MJN	JURISDICTION, NATION
	MJPB	JURISDICTION, PUBLIC LANDS
	MJS	JURISDICTION, STATE
	MJT	JURISDICTION, TOWN
	MJV	JURISDICTION, VILLAGE
	MPL	PROPERTY LOT LINE
	MPLA	PROPERTY LOT LINE, APPROXIMATE
	MSL	SUB LOT LINE

ROADWAY

STYLE	NAME	DESCRIPTION
	RG	GUIDE RAIL, MISCELLANEOUS
	RGB	GUIDE RAIL, BOX BEAM
	RGBM	GUIDE RAIL, BOX BEAM, MEDIAN
	RGC	GUIDE RAIL, CABLE
	RGCB	GUIDE RAIL, CONCRETE BARRIER
	RGP_P	GUIDE POST
	RGW	GUIDE RAIL, W BEAM
	RGWM	GUIDE RAIL, W BEAM, MEDIAN
	RPB	PARKING BUMPER
	RRC	RAIL ROAD, CATENARY
3R	RRER	RAIL ROAD, 3RD RAIL
	RRPLS_P	RAIL, PHOTO, LARGE SCALE
	RRPSS	RAIL, PHOTO, SMALL SCALE
	RRS	RUMBLE STRIP
	RRSLS_P	RAIL, SURVEY, LARGE SCALE
	RRSSS	RAIL, SURVEY, SMALL SCALE

STRIPING

STYLE	NAME	DESCRIPTION
	STB•	BROKEN LINE
	STDB•	DOUBLE BROKEN LINE
	STDL•	DOTTED LINE LONG
	STDS•	DOTTED LINE SHORT
	STFB•	FULL BARRIER LINE
	STH•	HATCH LINE
	STPB•	PARTIAL BARRIER LINE
	STRCT	ROUNDABOUT, CAT TRACKS
	STRYL	ROUNDABOUT, YIELD LINE
	STSB	STOP BAR
	STSE•	SOLID, EDGE
	STXL•	X WALK, LADDER LINE
		• = W (WHITE) OR Y (YELLOW)

TRAFFIC CONTROL

STYLE	NAME	DESCRIPTION
	TCSW	SIGNAL, SPAN WIRE

UTILITIES

STYLE	NAME	DESCRIPTION
C	UC	CONDUIT, UNDERGROUND
]C[	UCH	CONDUIT, HANGING
OC	UCO	CONDUIT, OVERHEAD
E	UE	ELECTRIC LINE, UNDERGROUND
]E[	UEH	ELECTRIC LINE, HANGING
OE	UEO	ELECTRIC LINE, OVERHEAD
OET	UETO	ELECTRIC TRANSMISSION, OVERHEAD
	UESS	ELECTRIC, SUBSTATIONS
FO	UFO	FIBER OPTIC, UNDERGROUND
]FO[	UFOH	FIBER OPTIC, HANGING
OFO	UFOO	FIBER OPTIC, OVERHEAD
G	UG	GAS, UNDERGROUND
]G[	UGH	GAS, HANGING
OG	UGO	GAS, OVERHEAD
IC	UIC	INFORM CABLE, UNDERGROUND
]IC[	UICH	INFORM CABLE, HANGING
O	UO	OIL LINE, UNDERGROUND
]O[	UOH	OIL LINE, HANGING
	UPBP	POLE, BRACE, PUSH BRACE
	UPGW	POLE, GUY WIRE
SA	USA	SANITARY SEWER, UNDERGROUND
]SA[	USAH	SANITARY SEWER, HANGING
SAF	USAF	SANITARY SEWER, FORCE MAIN, UGND
]SAF[	USAFH	SANITARY SEWER, FORCE MAIN, HANG
T	UT	TELEPHONE, UNDERGROUND
]T[	UTH	TELEPHONE, HANGING
OT	UTO	TELEPHONE, OVERHEAD
CTV	UTV	CABLE TV, UNDERGROUND
]CTV[	UTVH	CABLE TV, HANGING
OCTV	UTVO	CABLE TV, OVERHEAD
UU	UUU	UNKNOWN, UNDERGROUND
]UU[	UUH	UNKNOWN, HANGING
OUU	UUO	UNKNOWN, OVERHEAD
W	UW	WATER LINE, UNDERGROUND
	UWS	WATER SERVICE LINE, UNDERGROUND
]W[	UWH	WATER LINE, HANGING
OW	UWO	WATER LINE, OVERHEAD

TRAFFIC MAINTENANCE

STYLE	NAME	DESCRIPTION
	TMBCD_P	BARRICADES
	TMBCDL_P	BARRICADES, LIGHTED
	TMBT_P	BARRIER, TEMPORARY
	TMBTL_P	BARRIER, TEMPORARY, LIGHTED
	TMDB_P	DEVICE, BARRELS
	TMDBL_P	DEVICE, BARRELS, LIGHTED
	TMDC_P	DEVICE, CONES

1. THE LEGEND ILLUSTRATES MAPPING FEATURES (EXISTING AND PROPOSED).
2. FEATURES ARE SHOWN AS EITHER LINEAR (ROADWAY GUIDERAIL, ROADWAY SIDEWALK, UTILITY LINES, ETC.) OR POINT (SIGN, UTILITY POLE, ETC.).
3. FEATURES SHOWN ON THE LEGEND AS EXISTING FEATURES ALSO HAVE CORRESPONDING PROPOSED FEATURES.
4. PROPOSED FEATURE SYMBOLOGY IS IDENTICAL TO EXISTING FEATURE SYMBOLOGY EXCLUDING LINE WEIGHT. LINE WEIGHT FOR PROPOSED FEATURES IS THICKER.
5. MAPPING FEATURES NOT INCLUDED ON THE LEGEND SHEET DO NOT HAVE A UNIQUE SYMBOLOGY (SUCH AS THE PAVEMENT EDGE, PAVEMENT EDGE OF TRAVEL WAY) AND SHOULD BE LABELED ON THE PLANS.
6. FEATURES SHOWN AT THE HEAVIER WEIGHT ARE PROPOSED ONLY AND DO NOT HAVE CORRESPONDING EXISTING FEATURES.

NO AS-BUILT REVISIONS

NO.	DATE	BY:	REVISION

Barton & Loguidice, P.C.

DRAFTED BY: JMW/JJB
DESGIN BY: JMW

DEPARTMENT OF TRANSPORTATION
50 WEST MAIN STREET, SUITE 6100
ROCHESTER, NEW YORK 14614-1231

UNAUTHORIZED ALTERATION OR ADDITION TO THIS DRAWING IS A VIOLATION OF THE NEW YORK STATE EDUCATION LAW ARTICLE 145, SECTION 7209

PROJECT NAME: WESTFALL ROAD
LIMITS: E. HENRIETTA ROAD TO LAC-DE-VILLE BLVD
TOWN: BRIGHTON
CITY: ROCHESTER
CAPITAL PROJECT NO.: 4753.77
BRIDGE IDENTIFICATION NO.: N.A.

LEGEND & LINE SYMBOLOGY

SCALE: NOT TO SCALE
DATE ISSUED: 4/25/2014
DRAWING NO. L-1
SHEET NO. 3 OF 112

mek
I:\MicroStation\Workspace\PLOT\NYSDOT\NYSDOT_SIZE_B.TBL
I:\MicroStation\Workspace\Plot\NYSDOT\NYSDOT_HPLJ5200_B.plt

FILE NAME = I:\Shared\1000\1066005\AS-BUILTS\1066005_leg_01.dgn
DATE = 4/25/2014
TIME = 9:45:16 AM

ALIGNMENT

CELL	NAME	DESCRIPTION
	ACC	CENTER OF CURVATURE
	ACOGO	COGO
	ACS	CURVE TO SPIRAL
	ADPI_P	DETOUR, POINT OF INTERSECT.
	ADPL_P	DETOUR, POINT ON LINE
	AEQN	EQUATION
	AEQNAHD	EQUATION AHEAD
	AEQNBK	EQUATION BACK
	AEVT	EVENT STATION
	APC	POINT OF CURVATURE
	APCC	POINT OF COMPOUND CURVATURE
	API	POINT OF INTERSECTION
	APOB	POINT OF BEGINNING
	APOC	POINT OF CURVATURE
	APOE	POINT OF END
	APOL	POINT ON LINE
	APOS	POINT ON SPIRAL
	APOT	POINT ON TANGENT
	APOVC	POINT ON VERTICAL CURVE
	APOVT	POINT ON VERTICAL TANGENT
	APORC	POINT ON REVERSE CURVE
	APT	POINT OF TANGENCY
	APVC	POINT OF VERTICAL CURVATURE
	APVCC	POINT OF VERT. CMPND CURVE
	APVI	POINT OF VERT. INTERSECTION
	APVRC	POINT OF VERT. REVERSE CURVE
	APVT	POINT OF VERTICAL TANGENCY
	ASC	SPIRAL TO CURVE
	ASPI	SPIRAL POINT OF INTERSECTION
	ASTS	SPIRAL TO SPIRAL
	AST	SPIRAL TO TANGENT
	ATS	TANGENT TO SPIRAL
	AVEVT	VERTICAL EVENT POINT
	AVHIGH	VERTICAL HIGH POINT
	AVLOW	VERTICAL LOW POINT

CONTROL

	CBP	BASELINE, POINT
	CBPOL	BASELINE, POINT ON LINE
	CBSP	BASELINE, SPUR POINT
	CBTP	BASELINE, TIE POINT
	CPBM	BENCHMARK
	CPH	POINT, HORIZ. PHOTOGRAMMETRY
	CPSM	POINT, SURVEY MARKER, PERM.
	CPSV	POINT, VERT., PHOTOGRAMMETRY

BRIDGE

CELL	NAME	DESCRIPTION
	BSC	BRIDGE, SCUPPER

DRAINAGE

	DINV	INVERT
	DS	STRUCTURE, RECTANGULAR
	DSI	STRUCTURE, INVERT
	DSM	STRUCTURE, MANHOLE
	DSMTXX_P	STRUCTURE, MANHOLE, TYPE "XX" "XX" = 48, 60, 72, 96
	DSR	STRUCTURE, ROUND
	DST"X"CB_P	STRUCTURE, RECT., WITH CURB TYPE "X" "X" = F, G, N, O, P, R
	DST"X"_P	STRUCTURE, RECT., TYPE "X" "X" = I, K, L, M, O, P, U

ENVIRONMENTAL

CULV	EIOP_P	STR., INLET, OUTLET PROT.
GB	EIPGB_P	STR., INLET PROT., GRAVEL BAG
H/S	EIPHS_P	STR., INLET PROT., HAY/STRAW
PRFB	EIPP_P	STR., INLET PROT., PREFAB.
SF	EIPSF_P	STR., INLET PROT., SILT FENCE
	ERCB	RISER, CONCRETE BOX
	ETRS_P	TRAP, SEDIMENT
	EWFG	WETLAND FLAG

GEOTECHNICAL

	GDH	DRILL HOLE

LANDSCAPE

CELL	NAME	DESCRIPTION
	LELS	ELEVATION, SPOT
	LFP	FLAG POLE
	LMB	MAILBOX
	LPB	PAPER BOX
	LPST	POST, SINGLE
	LRB	ROCK, BOULDER
	LSHC	SHRUB, CONIFEROUS
	LSHD	SHRUB, DECIDUOUS
	LTC	TREE, CONIFEROUS
	LTD	TREE, DECIDUOUS
	LTS	TREE, STUMP
	LTW_P	TREE, WELL OR WALL
	LUKP	UNKNOWN POINT

ROADWAY

CELL	NAME	DESCRIPTION
	RES_P	ELEVATION, SPOT
	RGA	GUIDE RAIL, ANCHOR
	RGP	GUIDE POST, SINGLE

SIGNS

	S	SINGLE POST
	S_P	SINGLE POST, PROPOSED
	SB_P	BACK TO BACK, PROPOSED
	SDEL	DELINEATORS
	SPM	PARKING METER
PFM	SRM	REFERENCE MARKERS
	SRSC3	SHLD, CTY, 123 DIG.
	SRSC4	SHLD, CTY, 4 DIG.
	SRSCT2	SHLD, CTY TOUR, 1-2 DIG.
	SRSCT4	SHLD, CTY TOUR, 3-4 DIG.
	SRSI	SHLD, INTERSTATE
	SRSN2	SHLD, NATIONAL, 2 DIG.
	SRSN3	SHLD, NATIONAL, 3 DIG.
	SRSS2	SHLD, STATE, 2 DIG.
	SRSS3	SHLD, STATE, 3 DIG.
	SRSS4	SHLD, STATE, 4 DIG.

TRAFFIC

	TCBJ	BOX, JUNCTION
	TCBP	BOX, PULL BOX
	TCBS	BOX, SPLICE
	TCMC	MICROCOMPUTER CABINET
	TCPP	PED POLE
	TCSH	SIGNAL HEADS
	TCSP	SIGNAL POLE

ITS

CELL	NAME	DESCRIPTION
	IANT_P	ANTENNAS
AI	IASCTS	ACCOU. SPEED/COUNT SNSR.S
P	ICABPAD	CABINET & PAD
	ICCTV	CCTV SITE
CDPD	ICDPD	CDPD TRANSCEIVER
	ICELLT	CELL PHONE TOWER
	ICJB	CONDUIT JACK OR BORING
	ICNTLCAB	CONTROLLER CABINET
C	ICPB	COMMUNICATION PULL BOX
	ICTD	CONDUIT TURNING DOWN
	ICTU	CONDUIT TURNING UP
	ICVTRT	COMM. VEH. ROAD TRANSCEIVER
	IDEFAULT	DEFAULT
EZ	IEZR	E-ZPASS READER
EZ-T	IEZTR	TRANSMITTAL READER
XC	IFOXCAB	FIBER OPTIC X-CONNECT CAB.
	IFUSSPL	FUSION SPLICE
	IHARADV	HAR ADVISORY SIGN
	IHARST	HAR SITE
LC	ILC	LOAD CENTER
	IMECSPL	MECHANICAL SPLICE
PM	IMSCS	PORT. SPEED & COUNT SNSR.
M	IMSCTS	MICRO SPEED & COUNT SNSR.
M	IMT	MICROWAVE TRANSCEIVER
VMS	IOVHVMS	PERM. OVERHEAD VMS
PA	IPASCS	PORT. ACCOU. SPD & CNT. SNSR.
	IPEDS	PEDESTRIAN SIGNAL HEAD
	IPSS	PAVEMENT SURFACE SNSR.
PVMS	IPVMS	PERM. VMS
RM	IRM	RAMP METER
RWIS	IRWIS	RDWY WEATHER INFO. SNSR.
	ISP	SOLAR PANEL
SS	ISST	SPREAD SPECT. TRANSCEIVER
TC	ITDB	TELEPHONE DEMARCATION BLK
TP	ITP	SUBSURFACE TEMP. PROBE
	IVTRT	VEHICLE TO RDWY TRANSCEIVER
WIM	IWIMD	WEIGHT IN MOTION DETECTOR
WVR	IWVR	WIRELESS VIDEO REPEATER
V	IWVRC	WIRELESS VIDEO RECEIVER
V	IWVTT	WIRELESS VIDEO TRANSMITTER

UTILITIES

CELL	NAME	DESCRIPTION
E	UEB	ELECTRIC, BOX
E	UEM	ELECTRIC, METER
E	UEMH	ELECTRIC, MANHOLE
	UEPT	ELECTRIC, POLE, TRANS.
G	UGM	GAS, METER
G	UGMH	GAS, MANHOLE
	UGLM	GAS, LINE MARKER
FP	UGP	GAS/FUEL PUMP
	UGV	GAS, VALVE
	UGVT	GAS, VENT
	ULP	LIGHTING, POLE
	ULPM	LIGHTING, POLE, MEDIAN
	ULPP	LIGHTING, POLE, PED.
	UMFC	MISC. FILLER CAP
	UOLM	OIL, LINE MARKER
	UP	POLE, WITH UTILITY
	UPD	POLE, DEAD (NO UTILITY)
	UPL	POLE, WITH LIGHT
S	USMH	SANITARY SEWER MANHOLE
P	UTB	TELEPHONE, BOOTH
	UTLM	TELEPHONE, LINE MARKER
T	UTMH	TELEPHONE, MANHOLE
	UTVLM	CABLE TV, LINE MARKER
C	UTVPB	CABLE TV, PULL BOX
	UUB	UNKNOWN, BOX
	UUJB	UNKNOWN, JUNCTION BOX
	UUMH	UNKNOWN, MANHOLE
	UUPB	UNKNOWN, PULL BOX
	UUVL	UNKNOWN, VALVE
	UUVT	UNKNOWN, VENT
	UUW	UNKNOWN, WELL
	UWFH	WATER, FIRE HYDRANT
W	UWM	WATER, METER
W	UWMH	WATER, MANHOLE
	UWS	WATER, CURB STOP
	UWV	WATER, VALVE
	UWW	WATER, WELL

ROW MAPPING

CELL	NAME	DESCRIPTION
	MDL1P	DEED LINE, TYPE 1
	MDL2P	DEED LINE, TYPE 2
	MDL3P	DEED LINE, TYPE 3
	MDL4P	DEED LINE, TYPE 4
	MDL5P	DEED LINE, TYPE 5
	MEEP	EASEMENT, EXISTING
	MEPAP_P	EASEMENT, PERM., APPROX.
	MEPP_P	EASEMENT, PERM., BACK LINE
	MEPSP_P	EASEMENT, PERM., SHAPE
	MFAP_P	FEE ACQUISITION, APPROX.
	MFP_P	FEE ACQUISITION, BACK LINE
	MFSP_P	FEE ACQUISITION, SHAPE
	MHBAP	HIGHWAY BNDRY., APPROX.
	MHBCP	HISTORICAL, BLDG. CORNERS
	MHBP	HIGHWAY BNDRY, PT.
	MJCP	PT., JURIS. CITY
	MPBC	PT., BUILDING CORNER
	MPCC	PT., CROSS CUT
	MPDH	PT., DRILL HOLE
	MPF	PT., FENCE LOCATION
	MPIP	PT., IRON PIPE
	MPIR	PT., IRON ROD
	MPM	PT., MONUMENT
	MPMM	PT., MONUMENT, MISC.
	MPN	PT., NAIL
	MPRS	PT., RAILROAD SPIKE
	MPSP	PT., SPIKE
	MPST	PT., STAKE
	MPTW	PT., TREE W/ WIRE
	MPWL	PT., WALL LOCATION

ROW ACQUISITION

MI PI FEE	MFS_P_T	FEE ACQUISITION
MI PI PE	MEPS_P_T	EASEMENT, PERMANENT
MI PI TE	METS_P_T	EASEMENT, TEMPORARY
MI PI TO	METS_P_T	OCCUPANCY, TEMPORARY
MI PI FEE WO/A	MFS_P_T	FEE ACQUISITION W/O ACCESS

1. THE LEGEND ILLUSTRATES MAPPING FEATURES (EXISTING AND PROPOSED).
2. FEATURES ARE SHOWN AS EITHER LINEAR (ROADWAY GUIDERAIL, ROADWAY SIDEWALK, UTILITY LINES, ETC.) OR POINT (SIGN, UTILITY POLE, ETC.).
3. FEATURES SHOWN ON THE LEGEND AS EXISTING FEATURES ALSO HAVE CORRESPONDING PROPOSED FEATURES.
4. PROPOSED FEATURE SYMBOLOGY IS IDENTICAL TO EXISTING FEATURE SYMBOLOGY EXCLUDING LINE WEIGHT. LINE WEIGHT FOR PROPOSED FEATURES IS THICKER.
5. MAPPING FEATURES NOT INCLUDED ON THE LEGEND SHEET DO NOT HAVE A UNIQUE SYMBOLOGY (SUCH AS THE PAVEMENT EDGE, PAVEMENT EDGE OF TRAVEL WAY) AND SHOULD BE LABELED ON THE PLANS.
6. FEATURES SHOWN AT THE HEAVIER WEIGHT ARE PROPOSED ONLY AND DO NOT HAVE CORRESPONDING EXISTING FEATURES.

NO AS-BUILT REVISIONS

NO.	DATE	BY:	REVISION

Barton & Loguidice, P.C.

DRAFTED BY: JMW/JJB
DESGIN BY: JMW

DEPARTMENT OF TRANSPORTATION
50 WEST MAIN STREET, SUITE 6100
ROCHESTER, NEW YORK 14614-1231

UNAUTHORIZED ALTERATION OR ADDITION TO THIS DRAWING IS A VIOLATION OF THE NEW YORK STATE EDUCATION LAW ARTICLE 145, SECTION 7209

PROJECT NAME: WESTFALL ROAD
LIMITS: E. HENRIETTA ROAD TO LAC-DE-VILLE BLVD
TOWN: BRIGHTON
CITY: ROCHESTER
CAPITAL PROJECT NO.: 4753.77
BRIDGE IDENTIFICATION NO.: N.A.

LEGEND & POINT SYMBOLOGY

SCALE: NOT TO SCALE
DATE ISSUED: 4/25/2014
DRAWING NO. L-2
SHEET NO. 4 OF 112

mek
I:\MicroStation\Workspace\PLOT\NYSDOT\NYSDOT_SIZE_B.TBL
I:\MicroStation\Workspace\Plot\NYSDOT\NYSDOT_HPLJ5200_B.plt
FILE NAME = I:\Shared\1000\1066005\AS-BUILTS\1066005_leg_02.dgn
DATE = 4/25/2014
TIME = 9:45:37 AM

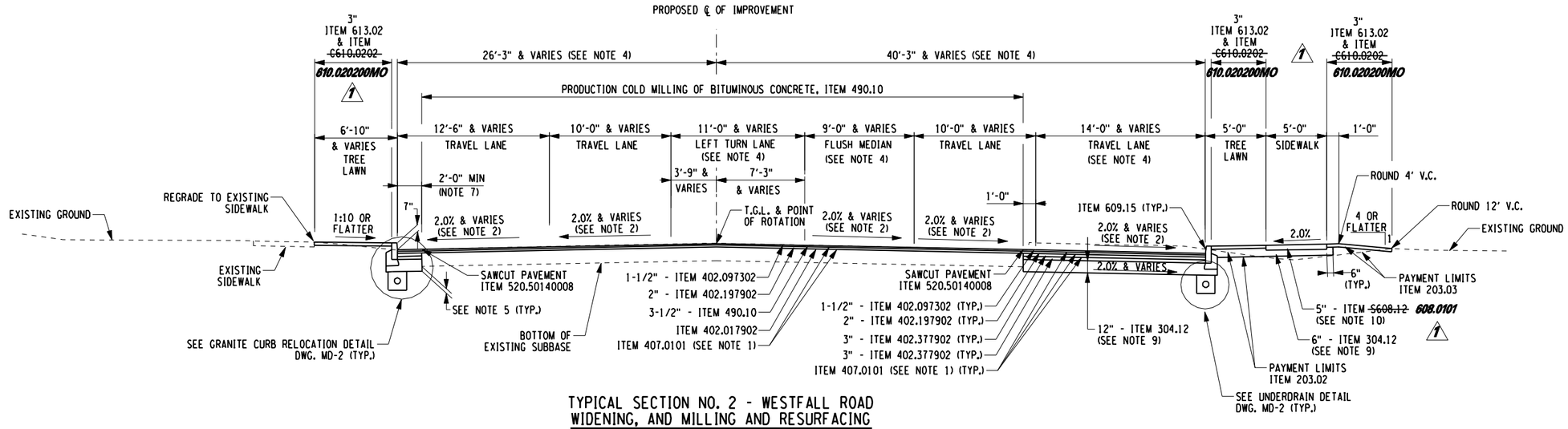

TYPICAL SECTION NO. 2 - WESTFALL ROAD WIDENING, AND MILLING AND RESURFACING

LOCATIONS:
STA. 7+35.00 TO STA. 11+62.75

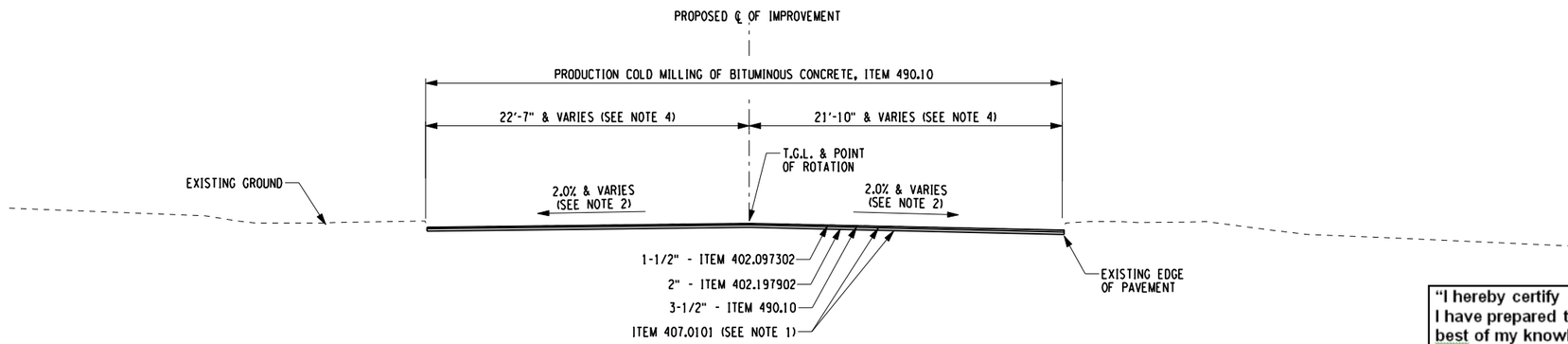

TYPICAL SECTION NO. 1 - WESTFALL ROAD MILLING AND RESURFACING

LOCATIONS:
STA. 7+10.00 TO STA. 7+35.00

"I hereby certify by my signature and seal below, that I have prepared this record drawing which is, to the best of my knowledge and in my professional opinion, a true representation of the work as constructed on the Westfall Road Improvements Phase III, Project No. 1409."

STATE OF NEW YORK · MATTHEW J. SCANDLEN · No. 069983 · LICENSED PROFESSIONAL ENGINEER

ITEM NO.	DESCRIPTION	UNITS	ITEM NO.	DESCRIPTION	UNITS
203.02	UNCLASSIFIED EXCAVATION AND DISPOSAL	CY	613.02	TOPSOIL - TYPE A	CY
203.03	EMBANKMENT IN-PLACE	CY			
304.12	SUBBASE COURSE, TYPE 2 CRUSHER RUN	CY			
402.017902	TRUE & LEVELING F9 SUPERPAVE HMA, 70 SERIES COMPACTION	T			
402.097302	9.5 F3 SUPERPAVE HMA, 70 SERIES COMPACTION	T			
402.197902	19 F9 SUPERPAVE HMA, 70 SERIES COMPACTION	T			
402.377902	37.5 F9 SUPERPAVE HMA, 70 SERIES COMPACTION	T			
407.0101	TACK COAT	GAL			
490.10	PRODUCTION COLD MILLING OF BITUMINOUS CONCRETE	SQY			
520.50140008	SAWCUTTING ASPHALT PAVEMENT	FT			
~~S608.12~~ 610.0101	CONCRETE SIDEWALKS AND DRIVEWAYS	CY			
609.0203	STONE CURB, GRANITE (TYPE C)	FT			
609.15	RESETTING EXISTING CURB	FT			
~~C610.0202~~ 610.020200	SEEDING - SEED MIX A	SY			

NOTES

1. TACK COAT SHALL BE APPLIED BETWEEN ALL LIFTS OF ASPHALT, AND OVER MILLED SURFACES.
2. REFER TO PROFILE SHEETS FOR CROSS SLOPE CHANGE.
3. IN AREAS WHERE BOTTOM OF PROPOSED SUBBASE IS ABOVE EXISTING PAVEMENT, REMOVE EXISTING PAVEMENT TO SUBBASE SURFACE. PAYMENT UNDER 203.02.
4. REFER TO PLANS FOR TAPER LOCATIONS.
5. SUBBASE SHALL EXTEND 2" BELOW ADJACENT BOTTOM OF EXISTING SUBBASE OR 12" DEEP, WHICHEVER IS GREATER.
6. REFER TO PLANS FOR LOCATIONS OF 7' SIDEWALK.
7. REFER TO DWG. MD-3 FOR PAVEMENT TREATMENT AT DRAINAGE STRUCTURES AND PIPES.
8. DEPTH OF SWALE SHALL BE 2.0' BELOW EDGE OF PAVEMENT UNLESS SPECIFIED OTHERWISE ON PLANS.
9. ITEM 304.12 SHALL BE CRUSHED LEDGE ROCK.
10. REFER TO DWG. MD-1 FOR SIDEWALK THICKNESS AT DRIVEWAYS.

NO.	DATE	BY:	REVISION
1	06/13	JJB/PJ	ITEM NUMBERS

Barton & Loguidice, P.C.

DRAFTED BY: JMW/JJB
DESIGN BY: JMW

DEPARTMENT OF TRANSPORTATION
50 WEST MAIN STREET, SUITE 6100
ROCHESTER, NEW YORK 14614-1231

UNAUTHORIZED ALTERATION OR ADDITION TO THIS DRAWING IS A VIOLATION OF THE NEW YORK STATE EDUCATION LAW ARTICLE 145, SECTION 7209

PROJECT NAME: WESTFALL ROAD
LIMITS: E. HENRIETTA ROAD TO LAC-DE-VILLE BLVD
TOWN: BRIGHTON
CITY: ROCHESTER
CAPITAL PROJECT NO.: 4753.77
BRIDGE IDENTIFICATION NO.: N.A.

TYPICAL SECTIONS

SCALE: NOT TO SCALE
DATE ISSUED: 4/25/2014
DRAWING NO. TS-1
SHEET NO. 5 OF 112

mek
I:\MicroStation\Workspace\PLOT\NYSDOT\NYSDOT_SIZE_B.TBL
I:\MicroStation\Workspace\Plot\NYSDOT\NYSDOT_HPLJ5200_B.plt

FILE NAME = I:\Shared\1000\1066005\AS-BUILTS\1066005_ts_01.dgn
DATE = 4/25/2014
TIME = 9:46:21 AM

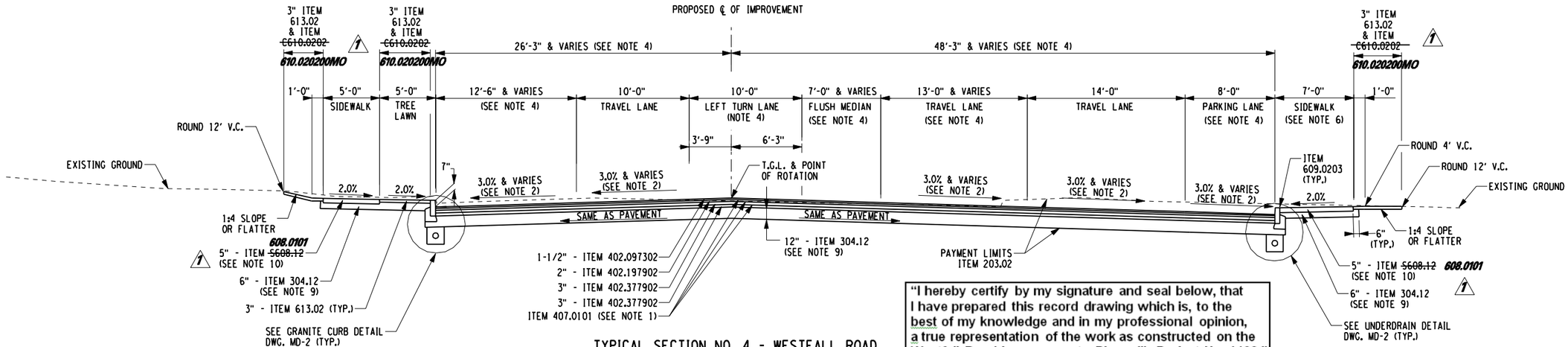

TYPICAL SECTION NO. 4 - WESTFALL ROAD
FULL DEPTH RECONSTRUCTION

LOCATIONS:
STA. 14+81.53 TO STA. 19+25.00

"I hereby certify by my signature and seal below, that I have prepared this record drawing which is, to the best of my knowledge and in my professional opinion, a true representation of the work as constructed on the Westfall Road Improvements Phase III, Project No. 1409."

STATE OF NEW YORK · MATTHEW J. SCANLEY · No. 069983 · LICENSED PROFESSIONAL ENGINEER

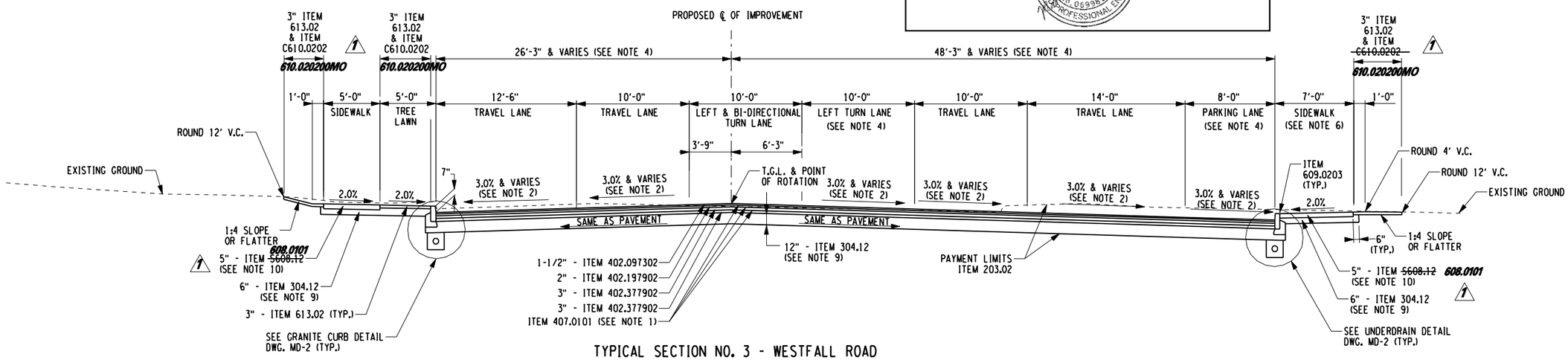

TYPICAL SECTION NO. 3 - WESTFALL ROAD
FULL DEPTH RECONSTRUCTION

LOCATIONS:
STA. 11+62.75 TO STA. 14+81.53

ITEM NO.	DESCRIPTION	UNITS	ITEM NO.	DESCRIPTION	UNITS
203.02	UNCLASSIFIED EXCAVATION AND DISPOSAL	CY	613.02	TOPSOIL - TYPE A	CY
203.03	EMBANKMENT IN-PLACE	CY			
304.12	SUBBASE COURSE, TYPE 2 CRUSHER RUN	CY			
402.017902	TRUE & LEVELING F9 SUPERPAVE HMA, 70 SERIES COMPACTION	T			
402.097302	9.5 F3 SUPERPAVE HMA, 70 SERIES COMPACTION	T			
402.197902	19 F9 SUPERPAVE HMA, 70 SERIES COMPACTION	T			
402.377902	37.5 F9 SUPERPAVE HMA, 70 SERIES COMPACTION	T			
407.0101	TACK COAT	GAL			
490.10	PRODUCTION COLD MILLING OF BITUMINOUS CONCRETE	SQY			
520.50140008	SAWCUTTING ASPHALT PAVEMENT	FT			
~~S608.12~~ 608.0101	CONCRETE SIDEWALKS AND DRIVEWAYS	CY			
609.0203	STONE CURB, GRANITE (TYPE C)	FT			
609.15	RESETTING EXISTING CURB	FT			
~~C610.0202~~ 610.020200	SEEDING - SEED MIX A	SY			

NOTES

1. TACK COAT SHALL BE APPLIED BETWEEN ALL LIFTS OF ASPHALT, AND OVER MILLED SURFACES.
2. REFER TO PROFILE SHEETS FOR CROSS SLOPE CHANGE.
3. IN AREAS WHERE BOTTOM OF PROPOSED SUBBASE IS ABOVE EXISTING PAVEMENT, REMOVE EXISTING PAVEMENT TO SUBBASE SURFACE, PAYMENT UNDER 203.02.
4. REFER TO PLANS FOR TAPER LOCATIONS.
5. SUBBASE SHALL EXTEND 2" BELOW ADJACENT BOTTOM OF EXISTING SUBBASE OR 12" DEEP, WHICHEVER IS GREATER.
6. REFER TO PLANS FOR LOCATIONS OF 7' SIDEWALK.
7. REFER TO DWG. MD-3 FOR PAVEMENT TREATMENT AT DRAINAGE STRUCTURES AND PIPES.
8. DEPTH OF SWALE SHALL BE 2.0' BELOW EDGE OF PAVEMENT UNLESS SPECIFIED OTHERWISE ON THE PLANS.
9. ITEM 304.12 SHALL BE CRUSHED LEDGE ROCK.
10. REFER TO DWG. MD-1 FOR SIDEWALK THICKNESS AT DRIVEWAYS.

NO.	DATE	BY:	REVISION
1	10/1/13	JJMW	ITEM NUMBERS

Barton & Loguidice, P.C.

DRAFTED BY: JMW/JJB
DESIGN BY: JMW

DEPARTMENT OF TRANSPORTATION
50 WEST MAIN STREET, SUITE 6100
ROCHESTER, NEW YORK 14614-1231

UNAUTHORIZED ALTERATION OR ADDITION TO THIS DRAWING IS A VIOLATION OF THE NEW YORK STATE EDUCATION LAW ARTICLE 145, SECTION 7209

PROJECT NAME: WESTFALL ROAD
LIMITS: E. HENRIETTA ROAD TO LAC-DE-VILLE BLVD
TOWN: BRIGHTON
CITY: ROCHESTER
CAPITAL PROJECT NO.: 4753.77
BRIDGE IDENTIFICATION NO.: N.A.

TYPICAL SECTIONS

SCALE: NOT TO SCALE
DATE ISSUED: 4/25/2014
DRAWING NO. TS-2
SHEET NO. 6 OF 112

mek
I:\MicroStation\Workspace\PLOT\NYSDOT\NYSDOT_SIZE_B.TBL
I:\MicroStation\Workspace\Plot\NYSDOT\NYSDOT_HPLJ5200_B.plt

FILE NAME = I:\Shared\1000\1066005\AS-BUILTS\1066005_ts_02.dgn
DATE = 4/25/2014
TIME = 9:46:43 AM

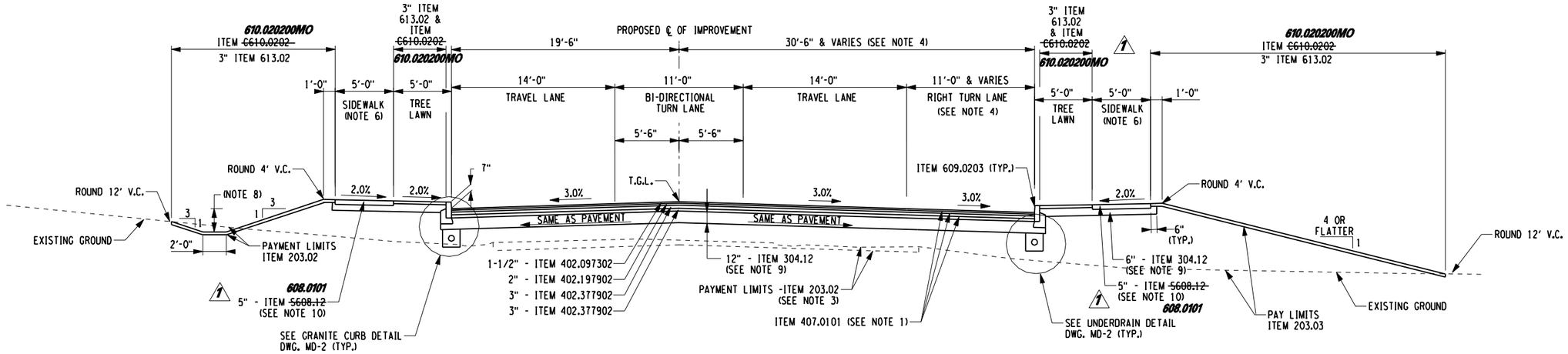

"I hereby certify by my signature and seal below, that I have prepared this record drawing which is, to the best of my knowledge and in my professional opinion, a true representation of the work as constructed on the Westfall Road Improvements Phase III, Project No. 1409."

STATE OF NEW YORK · MATTHEW J. SCANLEY · LICENSE No. 069963 · PROFESSIONAL ENGINEER

HALF SECTION WITH SWALE

LOCATIONS:
STA. 28+59.09 TO STA. 38+50.91 LT.
STA. 44+15.00 TO STA. 48+20.00 LT.
STA. 32+55.00 TO STA. 34+30.00 RT.
STA. 35+40.00 TO STA. 41+25.00 RT.

TYPICAL SECTION NO. 6 - WESTFALL ROAD
FULL DEPTH RECONSTRUCTION

LOCATIONS:
STA. 25+00 TO STA. 47+75.00

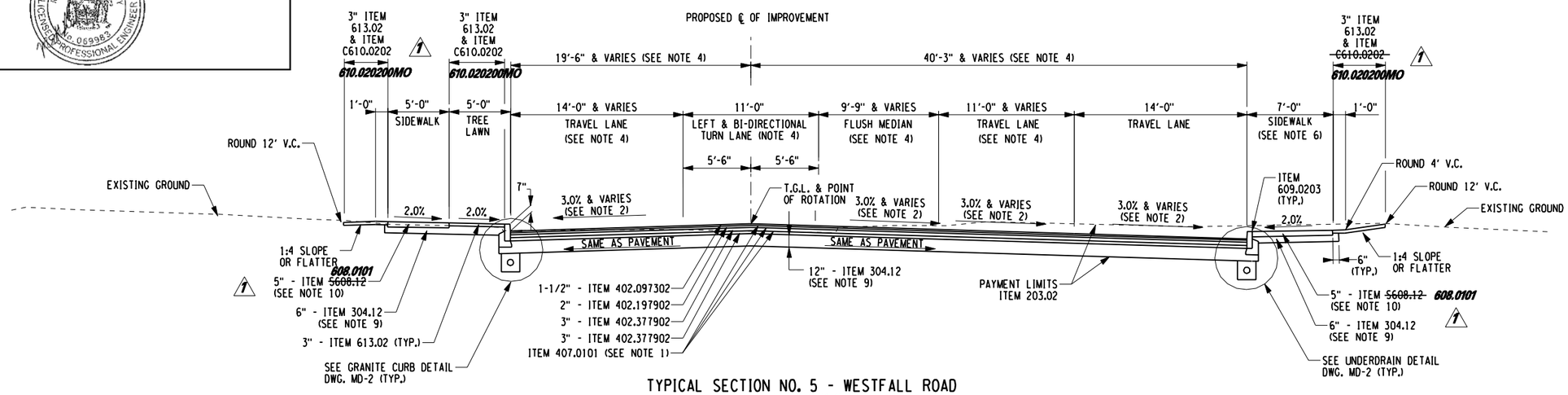

TYPICAL SECTION NO. 5 - WESTFALL ROAD
FULL DEPTH RECONSTRUCTION

LOCATIONS:
STA. 19+25.00 TO STA. 25+00.00

ITEM NO.	DESCRIPTION	UNITS	ITEM NO.	DESCRIPTION	UNITS
203.02	UNCLASSIFIED EXCAVATION AND DISPOSAL	CY	613.02	TOPSOIL - TYPE A	CY
203.03	EMBANKMENT IN-PLACE	CY			
304.12	SUBBASE COURSE, TYPE 2 CRUSHER RUN	CY			
402.017902	TRUE & LEVELING F9 SUPERPAVE HMA, 70 SERIES COMPACTION	T			
402.097302	9.5 F3 SUPERPAVE HMA, 70 SERIES COMPACTION	T			
402.197902	19 F9 SUPERPAVE HMA, 70 SERIES COMPACTION	T			
402.377902	37.5 F9 SUPERPAVE HMA, 70 SERIES COMPACTION	T			
407.0101	TACK COAT	GAL			
490.10	PRODUCTION COLD MILLING OF BITUMINOUS CONCRETE	SQY			
520.50140008	SAWCUTTING ASPHALT PAVEMENT	FT			
~~S608.12~~ 608.0101	CONCRETE SIDEWALKS AND DRIVEWAYS	CY			
609.0203	STONE CURB, GRANITE (TYPE C)	FT			
609.15	RESETTING EXISTING CURB	FT			
~~C610.0202~~ 610.020200	SEEDING - SEED MIX A	SY			

NOTES

1. TACK COAT SHALL BE APPLIED BETWEEN ALL LIFTS OF ASPHALT, AND OVER MILLED SURFACES.
2. REFER TO PROFILE SHEETS FOR CROSS SLOPE CHANGE.
3. IN AREAS WHERE BOTTOM OF PROPOSED SUBBASE IS ABOVE EXISTING PAVEMENT, REMOVE EXISTING PAVEMENT TO SUBBASE SURFACE, PAYMENT UNDER 203.02.
4. REFER TO PLANS FOR TAPER LOCATIONS.
5. SUBBASE SHALL EXTEND 2" BELOW ADJACENT BOTTOM OF EXISTING SUBBASE OR 12" DEEP, WHICHEVER IS GREATER.
6. REFER TO PLANS FOR LOCATIONS OF 7' SIDEWALK.
7. REFER TO DWG. MD-3 FOR PAVEMENT TREATMENT AT DRAINAGE STRUCTURES AND PIPES.
8. DEPTH OF SWALE SHALL BE 2.0' BELOW EDGE OF PAVEMENT UNLESS SPECIFIED OTHERWISE ON THE PLANS.
9. ITEM 304.12 SHALL BE CRUSHED LEDGE ROCK.
10. REFER TO DWG. MD-1 FOR SIDEWALK THICKNESS AT DRIVEWAYS.

NO.	DATE	BY:	REVISION
1	08/13	JJB/PV	ITEM NUMBERS

Barton & Loguidice, P.C.

DRAFTED BY: JMW/JJB
DESIGN BY: JMW

DEPARTMENT OF TRANSPORTATION
50 WEST MAIN STREET, SUITE 6100
ROCHESTER, NEW YORK 14614-1231
UNAUTHORIZED ALTERATION OR ADDITION TO THIS DRAWING IS A VIOLATION OF THE NEW YORK STATE EDUCATION LAW ARTICLE 145, SECTION 7209

PROJECT NAME: WESTFALL ROAD
LIMITS: E. HENRIETTA ROAD TO LAC-DE-VILLE BLVD
TOWN: BRIGHTON
CITY: ROCHESTER
CAPITAL PROJECT NO.: 4753.77
BRIDGE IDENTIFICATION NO.: N.A.

TYPICAL SECTIONS

SCALE: NOT TO SCALE
DATE ISSUED: 4/25/2014
DRAWING NO. TS-3
SHEET NO. 7 OF 112

FILE NAME = I:\Shared\1000\1066005\AS-BUILTS\1066005_ts_03.dgn
DATE = 4/25/2014
TIME = 9:47:03 AM

mek
I:\MicroStation\Workspace\PLOT\NYSDOT\NYSDOT_SIZE_B.TBL
I:\MicroStation\Workspace\Plot\NYSDOT\NYSDOT_HPLJ5200_B.plt

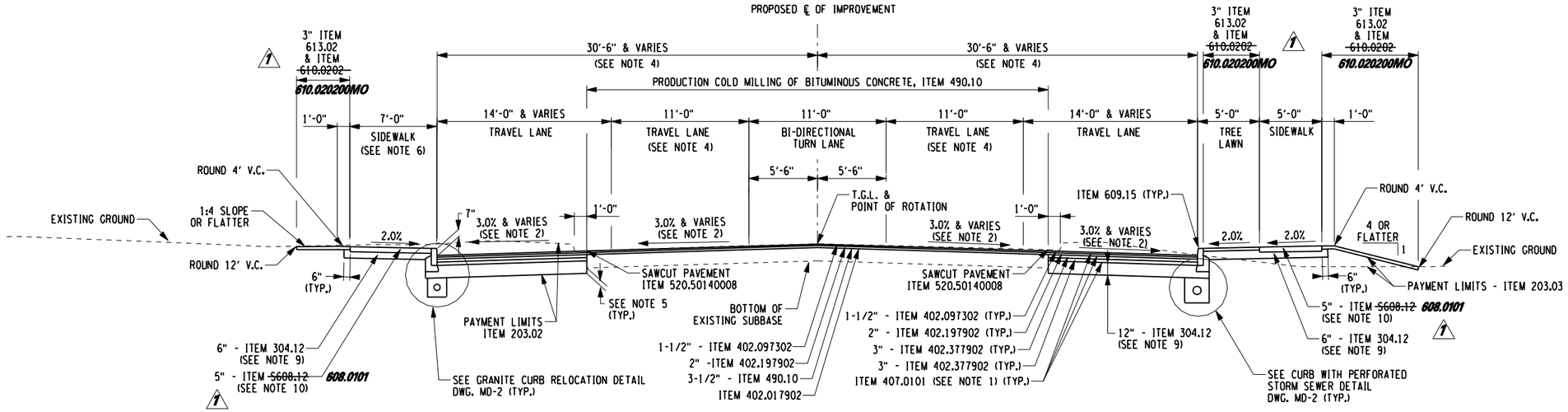

TYPICAL SECTION NO. 8 - WESTFALL ROAD
WIDENING, AND MILLING AND RESURFACING

LOCATIONS:
STA. 53+15.92 TO STA. 72+32.71

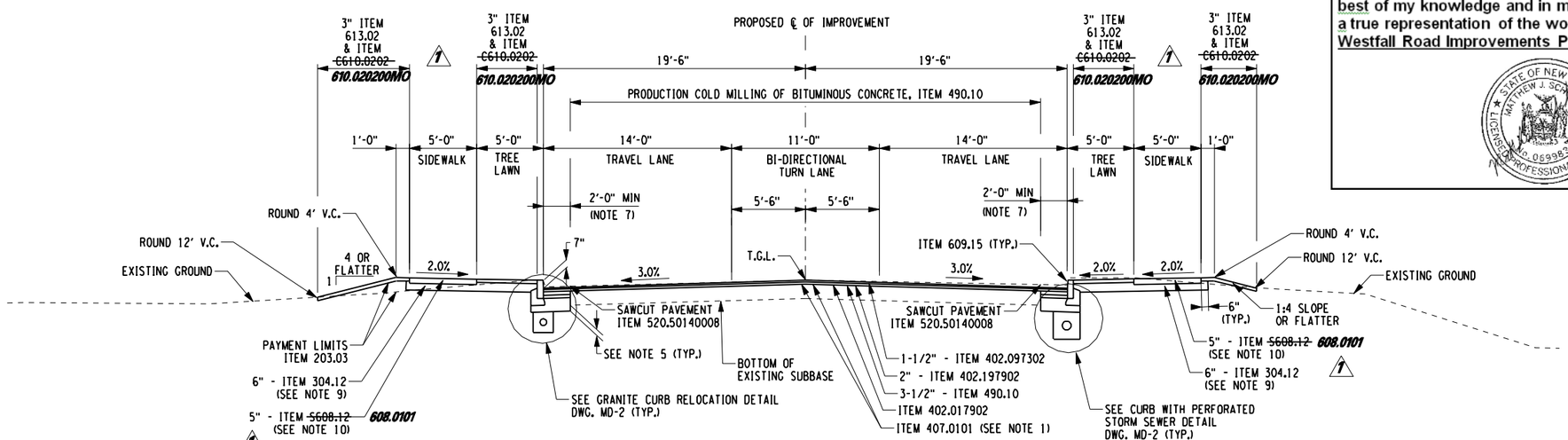

TYPICAL SECTION NO. 7 - WESTFALL ROAD
MILLING AND RESURFACING WITH CURB AND SIDEWALK RECONSTRUCTION

LOCATIONS:
STA. 47+75.00 TO STA. 53+15.92

ITEM NO.	DESCRIPTION	UNITS	ITEM NO.	DESCRIPTION	UNITS
203.02	UNCLASSIFIED EXCAVATION AND DISPOSAL	CY	613.02	TOPSOIL - TYPE A	CY
203.03	EMBANKMENT IN-PLACE	CY			
304.12	SUBBASE COURSE, TYPE 2 CRUSHER RUN	CY			
402.017902	TRUE & LEVELING F9 SUPERPAVE HMA, 70 SERIES COMPACTION	T			
402.097302	9.5 F3 SUPERPAVE HMA, 70 SERIES COMPACTION	T			
402.197902	19 F9 SUPERPAVE HMA, 70 SERIES COMPACTION	T			
402.377902	37.5 F9 SUPERPAVE HMA, 70 SERIES COMPACTION	T			
407.0101	TACK COAT	GAL			
490.10	PRODUCTION COLD MILLING OF BITUMINOUS CONCRETE	SQY			
520.50140008	SAWCUTTING ASPHALT PAVEMENT	FT			
~~S608.12~~ 608.0101	CONCRETE SIDEWALKS AND DRIVEWAYS	CY			
609.0203	STONE CURB, GRANITE (TYPE C)	FT			
609.15	RESETTING EXISTING CURB	FT			
~~C610.0202~~ 610.020200	SEEDING - SEED MIX A	SY			

NOTES

1. TACK COAT SHALL BE APPLIED BETWEEN ALL LIFTS OF ASPHALT, AND OVER MILLED SURFACES.
2. REFER TO PROFILE SHEETS FOR CROSS SLOPE CHANGE.
3. IN AREAS WHERE BOTTOM OF PROPOSED SUBBASE IS ABOVE EXISTING PAVEMENT, REMOVE EXISTING PAVEMENT TO SUBBASE SURFACE, PAYMENT UNDER 203.02.
4. REFER TO PLANS FOR TAPER LOCATIONS.
5. SUBBASE SHALL EXTEND 2" BELOW ADJACENT BOTTOM OF EXISTING SUBBASE OR 12" DEEP, WHICHEVER IS GREATER.
6. REFER TO PLANS FOR LOCATIONS OF 7' SIDEWALK.
7. REFER TO DWG. MD-3 FOR PAVEMENT TREATMENT AT DRAINAGE STRUCTURES AND PIPES.
8. DEPTH OF SWALE SHALL BE 2.0' BELOW EDGE OF PAVEMENT UNLESS SPECIFIED OTHERWISE ON THE PLANS.
9. ITEM 304.12 SHALL BE CRUSHED LEDGE ROCK.
10. REFER TO DWG. MD-1 FOR SIDEWALK THICKNESS AT DRIVEWAYS.

"I hereby certify by my signature and seal below, that I have prepared this record drawing which is, to the best of my knowledge and in my professional opinion, a true representation of the work as constructed on the Westfall Road Improvements Phase III, Project No. 1409."

STATE OF NEW YORK · MATTHEW J. SCHOLTZ · 077059983 · LICENSED PROFESSIONAL ENGINEER

NO.	DATE	BY:	REVISION
1	06/13	JMW	ITEM NUMBERS

Barton & Loguidice, P.C.

DRAFTED BY: JMW/JJB
DESIGN BY: JMW

DEPARTMENT OF TRANSPORTATION
50 WEST MAIN STREET, SUITE 6100
ROCHESTER, NEW YORK 14614-1231

UNAUTHORIZED ALTERATION OR ADDITION TO THIS DRAWING IS A VIOLATION OF THE NEW YORK STATE EDUCATION LAW ARTICLE 145, SECTION 7209

PROJECT NAME: WESTFALL ROAD
LIMITS: E. HENRIETTA ROAD TO LAC-DE-VILLE BLVD
TOWN: BRIGHTON
CITY: ROCHESTER
CAPITAL PROJECT NO.: 4753.77
BRIDGE IDENTIFICATION NO.: N.A.

TYPICAL SECTIONS

SCALE: NOT TO SCALE
DATE ISSUED: 4/25/2014
DRAWING NO. TS-4
SHEET NO. 8 OF 112

mek
I:\MicroStation\Workspace\PLOT\NYSDOT\NYSDOT_SIZE_B.TBL
I:\MicroStation\Workspace\Plot\NYSDOT\NYSDOT_HPLJ5200_B.plt
FILE NAME = I:\Shared\1000\1066005\AS-BUILTS\1066005_ts_04.dgn
DATE = 4/25/2014
TIME = 9:47:25 AM

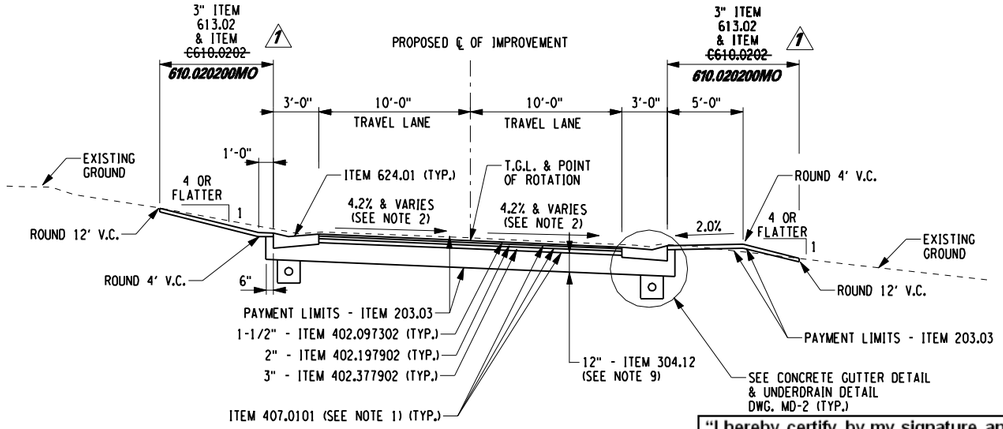

TYPICAL SECTION NO. 10 - METROPOLITAN DRIVE
PAVEMENT RECONSTRUCTION

LOCATIONS:
STA. ME 10+19.50 TO STA. ME 11+15.00

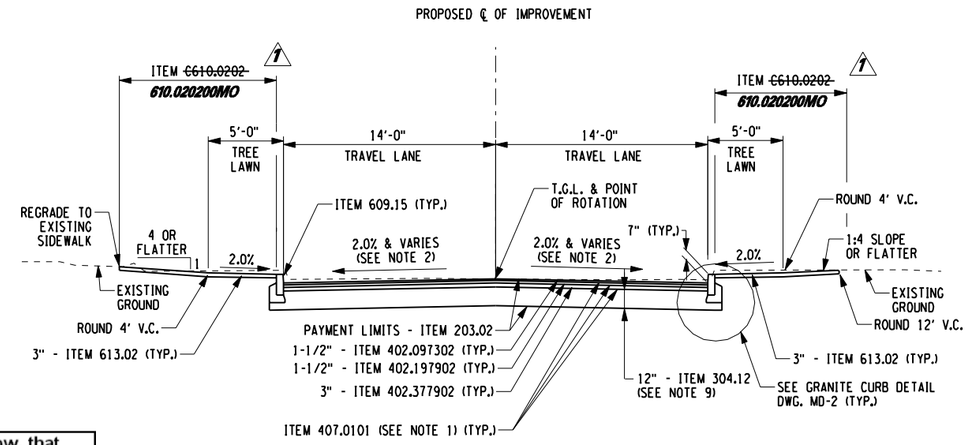

TYPICAL SECTION NO. 12 - SAWGRASS DRIVE EXTENSION
PAVEMENT RECONSTRUCTION

LOCATIONS:
STA. SGE 10+50.00 TO STA. SGE 12+05.50

"I hereby certify by my signature and seal below, that I have prepared this record drawing which is, to the best of my knowledge and in my professional opinion, a true representation of the work as constructed on the Westfall Road Improvements Phase III, Project No. 1409."

STATE OF NEW YORK · MATHEW J. SCHOLTZ · LICENSED PROFESSIONAL ENGINEER · No. 069983

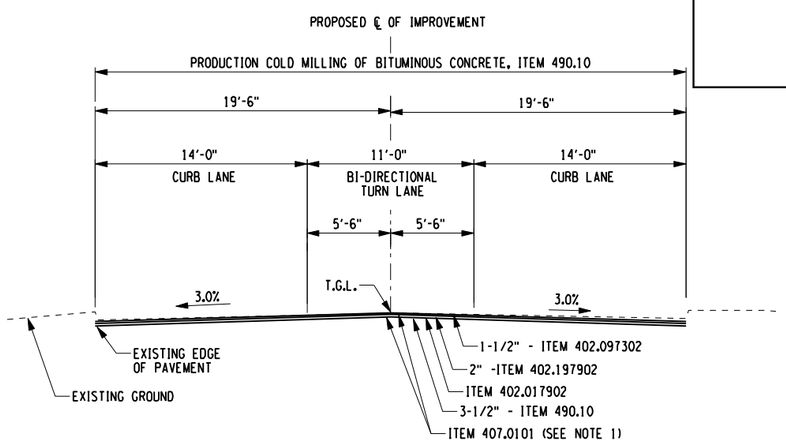

TYPICAL SECTION NO. 9 - WESTFALL ROAD
MILLING AND RESURFACING WITH CURB RECONSTRUCTION

LOCATIONS:
STA. 72+32.71 TO STA. 75+95.00

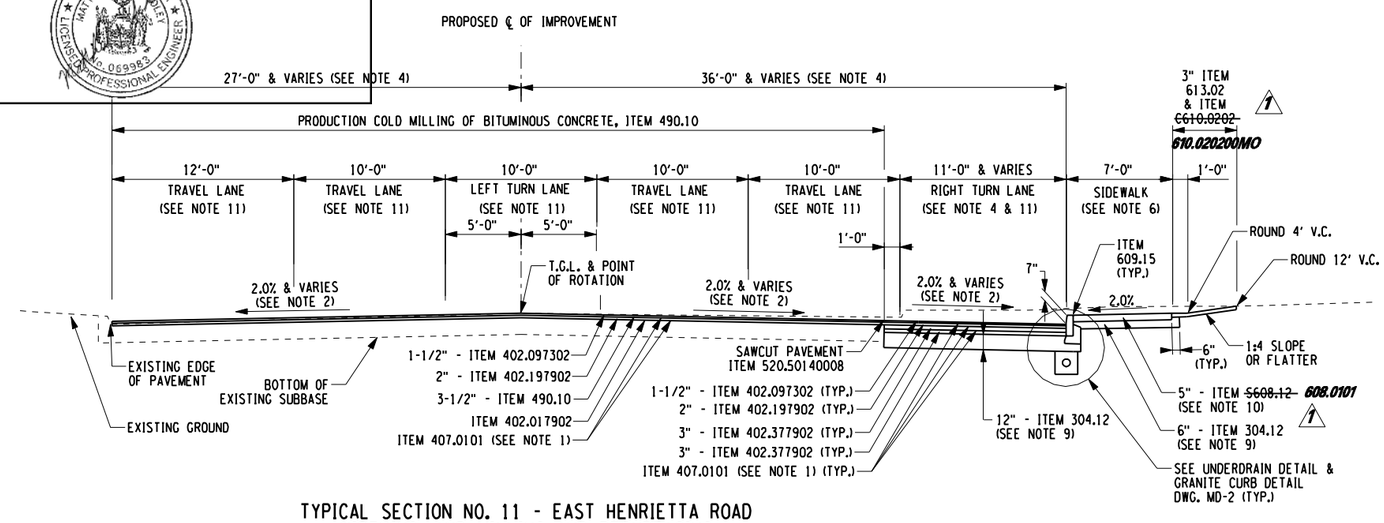

TYPICAL SECTION NO. 11 - EAST HENRIETTA ROAD
WIDENING, AND MILLING AND RESURFACING

LOCATIONS:
STA. EH 11+10 TO STA. EH 16+45

ITEM NO.	DESCRIPTION	UNITS	ITEM NO.	DESCRIPTION	UNITS
203.02	UNCLASSIFIED EXCAVATION AND DISPOSAL	CY	~~C610.0202~~	610.020200 SEEDING - SEED MIX A	SY
203.03	EMBANKMENT IN-PLACE	CY	613.02	TOPSOIL - TYPE A	CY
304.12	SUBBASE COURSE, TYPE 2 CRUSHER RUN	CY	624.01	CONVENTIONALLY FORMED OR MACHINE FORMED CONCRETE GUTTERS	SF
402.017902	TRUE & LEVELING F9 SUPERPAVE HMA, 70 SERIES COMPACTION	T			
402.097302	9.5 F3 SUPERPAVE HMA, 70 SERIES COMPACTION	T			
402.197902	19 F9 SUPERPAVE HMA, 70 SERIES COMPACTION	T			
402.377902	37.5 F9 SUPERPAVE HMA, 70 SERIES COMPACTION	T			
407.0101	TACK COAT	GAL			
490.10	PRODUCTION COLD MILLING OF BITUMINOUS CONCRETE	SY			
490.30	MISCELLANEOUS COLD MILLING OF BITUMINOUS CONCRETE	SY			
520.50140008	SAWCUTTING ASPHALT PAVEMENT	FT			
~~S608.12~~ 608.0101	CONCRETE SIDEWALKS AND DRIVEWAYS	CY			
609.0203	STONE CURB, GRANITE (TYPE C)	FT			
609.15	RESETTING EXISTING CURB	FT			

NOTES

1. TACK COAT SHALL BE APPLIED BETWEEN ALL LIFTS OF ASPHALT, AND OVER MILLED SURFACES.
2. REFER TO PROFILE SHEETS FOR CROSS SLOPE CHANGE.
3. IN AREAS WHERE BOTTOM OF PROPOSED SUBBASE IS ABOVE EXISTING PAVEMENT, REMOVE EXISTING PAVEMENT TO SUBBASE SURFACE, PAYMENT UNDER 203.02.
4. REFER TO PLANS FOR TAPER LOCATIONS.
5. SUBBASE SHALL EXTEND 2" BELOW ADJACENT BOTTOM OF EXISTING SUBBASE OR 12" DEEP, WHICHEVER IS GREATER.
6. REFER TO PLANS FOR LOCATIONS OF 7' SIDEWALK.
7. REFER TO DWG. MD-3 FOR PAVEMENT TREATMENT AT DRAINAGE STRUCTURES AND PIPES.
8. DEPTH OF SWALE SHALL BE 2.0' BELOW EDGE OF PAVEMENT UNLESS SPECIFIED OTHERWISE ON THE PLANS.
9. ITEM 304.12 SHALL BE CRUSHED LEDGE ROCK.
10. REFER TO DWG. MD-1 FOR SIDEWALK THICKNESS AT DRIVEWAYS.
11. REFER TO PLANS FOR LANE WIDTH VARIATIONS.

NO.	DATE	BY:	REVISION
1	10/1/12	JMW	ITEM NUMBERS

Barton & Loguidice, P.C.

DRAFTED BY: JMW/JJB
DESIGN BY: JMW

DEPARTMENT OF TRANSPORTATION
50 WEST MAIN STREET, SUITE 6100
ROCHESTER, NEW YORK 14614-1231

UNAUTHORIZED ALTERATION OR ADDITION TO THIS DRAWING IS A VIOLATION OF THE NEW YORK STATE EDUCATION LAW ARTICLE 145, SECTION 7209

PROJECT NAME: WESTFALL ROAD
LIMITS: E. HENRIETTA ROAD TO LAC-DE-VILLE BLVD
TOWN: BRIGHTON
CITY: ROCHESTER
CAPITAL PROJECT NO.: 4753.77
BRIDGE IDENTIFICATION NO.: N.A.

TYPICAL SECTIONS

SCALE: NOT TO SCALE
DATE ISSUED: 4/25/2014
DRAWING NO. TS-5
SHEET NO. 9 OF 112

mek
I:\MicroStation\Workspace\PLOT\NYSDOT\NYSDOT_SIZE_B.TBL
I:\MicroStation\Workspace\Plot\NYSDOT\NYSDOT_HPLJ5200_B.plt
FILE NAME = I:\Shared\1000\1066005\AS-BUILTS\1066005_ts_05.dgn
DATE = 4/25/2014
TIME = 9:47:43 AM

"I hereby certify by my signature and seal below, that I have prepared this record drawing which is, to the best of my knowledge and in my professional opinion, a true representation of the work as constructed on the Westfall Road Improvements Phase III, Project No. 1409."

STATE OF NEW YORK · MATTHEW J. SCHOLEY · LICENSED PROFESSIONAL ENGINEER · No. 069983

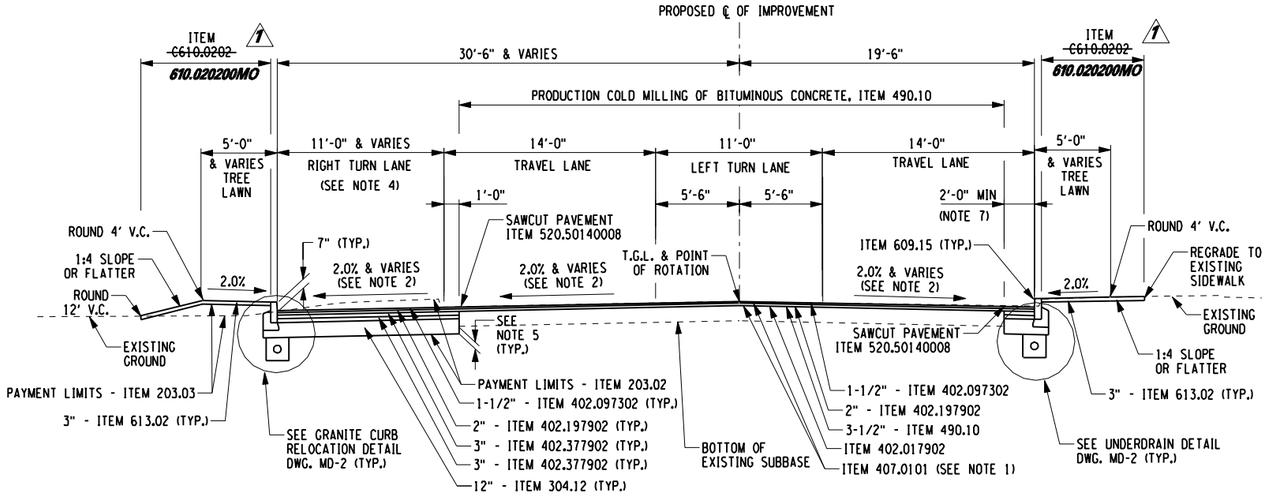

TYPICAL SECTION NO. 14 - SOUTH CLINTON AVENUE WIDENING, AND MILLING AND RESURFACING

LOCATIONS:
STA. SC 10+50.00 TO STA. SC 14+20.00

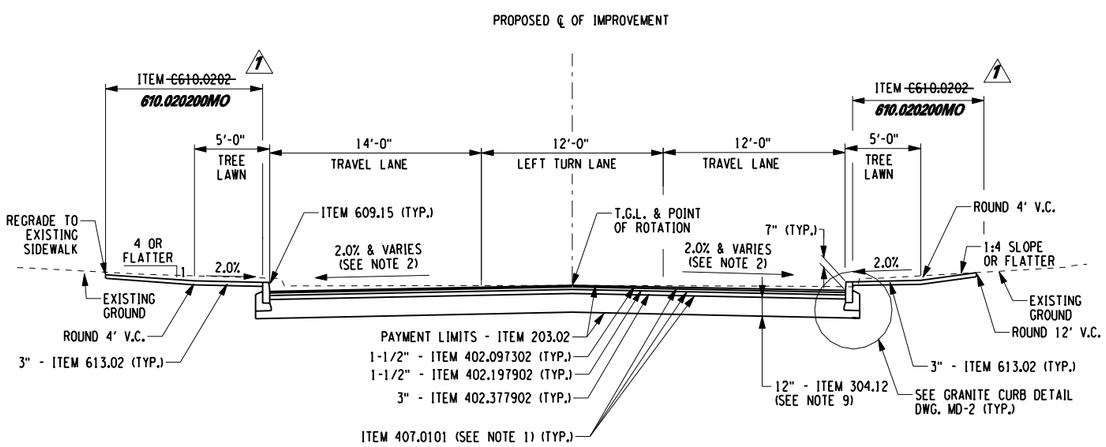

TYPICAL SECTION NO. 13 - SAWGRASS DRIVE PAVEMENT RECONSTRUCTION

LOCATIONS:
STA. SG 10+50.00 TO STA. SG 11+30.00

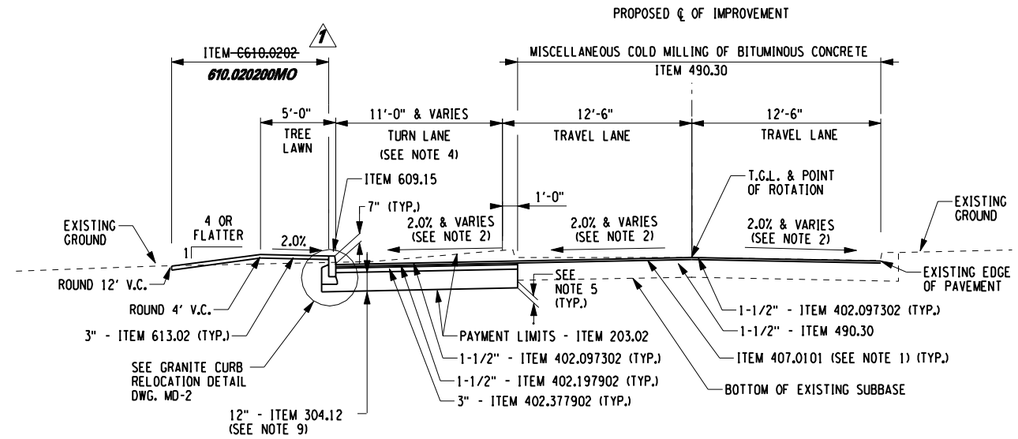

TYPICAL SECTION NO. 15 - FINGER LAKES DDSO DRIVEWAY WIDENING, AND MILLING AND RESURFACING

LOCATIONS:
STA. FL 10+30.50 TO STA. FL 12+10.00

ITEM NO.	DESCRIPTION	UNITS	ITEM NO.	DESCRIPTION	UNITS
203.02	UNCLASSIFIED EXCAVATION AND DISPOSAL	CY	~~C610.0202~~	SEEDING - SEED MIX A	SY
203.03	EMBANKMENT IN-PLACE	CY	613.02	TOPSOIL - TYPE A	CY
304.12	SUBBASE COURSE, TYPE 2 CRUSHER RUN	CY	624.01	CONVENTIONALLY FORMED OR MACHINE FORMED CONCRETE GUTTERS	SF
402.017902	TRUE & LEVELING F9 SUPERPAVE HMA, 70 SERIES COMPACTION	T			
402.097302	9.5 F3 SUPERPAVE HMA, 70 SERIES COMPACTION	T			
402.197902	19 F9 SUPERPAVE HMA, 70 SERIES COMPACTION	T			
402.377902	37.5 F9 SUPERPAVE HMA, 70 SERIES COMPACTION	T			
407.0101	TACK COAT	GAL			
490.10	PRODUCTION COLD MILLING OF BITUMINOUS CONCRETE	SY			
490.30	MISCELLANEOUS COLD MILLING OF BITUMINOUS CONCRETE	SY			
520.50140008	SAWCUTTING ASPHALT PAVEMENT	FT			
~~S608.12~~	608.0101 CONCRETE SIDEWALKS AND DRIVEWAYS	CY			
609.0203	STONE CURB, GRANITE (TYPE C)	FT			
609.15	RESETTING EXISTING CURB	FT			

610.020200

NOTES

1. TACK COAT SHALL BE APPLIED BETWEEN ALL LIFTS OF ASPHALT, AND OVER MILLED SURFACES.
2. REFER TO PROFILE SHEETS FOR CROSS SLOPE CHANGE.
3. IN AREAS WHERE BOTTOM OF PROPOSED SUBBASE IS ABOVE EXISTING PAVEMENT, REMOVE EXISTING PAVEMENT TO SUBBASE SURFACE, PAYMENT UNDER 203.02.
4. REFER TO PLANS FOR TAPER LOCATIONS.
5. SUBBASE SHALL EXTEND 2" BELOW ADJACENT BOTTOM OF EXISTING SUBBASE OR 12" DEEP, WHICHEVER IS GREATER.
6. REFER TO PLANS FOR LOCATIONS OF 7' SIDEWALK.
7. REFER TO DWG. MD-3 FOR PAVEMENT TREATMENT AT DRAINAGE STRUCTURES AND PIPES.
8. DEPTH OF SWALE SHALL BE 2.0' BELOW EDGE OF PAVEMENT UNLESS SPECIFIED OTHERWISE ON THE PLANS.
9. ITEM 304.12 SHALL BE CRUSHED LEDGE ROCK.
10. REFER TO DWG. MD-1 FOR SIDEWALK THICKNESS AT DRIVEWAYS.

NO.	DATE	BY:	REVISION
1	10/1/12	JJBW	ITEM NUMBERS

Barton & Loguidice, P.C.

DRAFTED BY: JMW/JJB
DESIGN BY: JMW

DEPARTMENT OF TRANSPORTATION
50 WEST MAIN STREET, SUITE 6100
ROCHESTER, NEW YORK 14614-1231

UNAUTHORIZED ALTERATION OR ADDITION TO THIS DRAWING IS A VIOLATION OF THE NEW YORK STATE EDUCATION LAW ARTICLE 145, SECTION 7209

PROJECT NAME: WESTFALL ROAD
LIMITS: E. HENRIETTA ROAD TO LAC-DE-VILLE BLVD
TOWN: BRIGHTON
CITY: ROCHESTER
CAPITAL PROJECT NO.: 4753.77
BRIDGE IDENTIFICATION NO.: N.A.

TYPICAL SECTIONS

SCALE: NOT TO SCALE
DATE ISSUED: 4/25/2014
DRAWING NO. TS-6
SHEET NO. 10 OF 112

mek
I:\MicroStation\Workspace\PLOT\NYSDOT\NYSDOT_SIZE_B.TBL
I:\MicroStation\Workspace\Plot\NYSDOT\NYSDOT_HPLJ5200_B.plt

FILE NAME = I:\Shared\1000\1066005\AS-BUILTS\1066005_TS_06.dgn
DATE = 4/25/2014
TIME = 9:48:05 AM

ESTIMATE OF QUANTITIES

ITEM NO	DESCRIPTION	PAY UNIT	EST. QUANTITY	FINAL QUANTITY
201.06	CLEARING AND GRUBBING	LS	NEC	NEC
203.02	UNCLASSIFIED EXCAVATION AND DISPOSAL	CY	17,400	21,637.18
203.03	EMBANKMENT IN PLACE	CY	5,800	7,031.79
203.07	SELECT GRANULAR FILL	CY	4,630	3,815.39
203.21	SELECT STRUCTURE FILL	CY	5	3.44
203.25	SAND BACKFILL	CY	301	272.5
204.01	CONTROLLED LOW STRENGTH MATERIAL (CLSM)	CY	40	49.02
205.0201	SEGREGATION AND STORAGE OF CONTAMINATED SOIL	LS	NEC	0.00
205.0401	PETROLEUM CONTAMINATION PARAMETER ANALYSIS	EACH	1	0.00
205.050201	DISPOSAL OF CONTAMINATED NON-HAZARDOUS WASTE SOIL	TON	140	0.00
206.02	TRENCH AND CULVERT EXCAVATION	CY	8,780	8,635.39
206.03	CONDUIT EXCAVATION AND BACKFILL INCLUDING SURFACE RESTORATION	LF	9,160	9,249.50
208.01030022	BIORETENTION AND DRY SWALE SOIL	CY	165	146.33
209.110101	CHECK DAM (DITCH BOTTOM WIDTH 0.0 TO 3'), STONE - TEMPORARY	EACH	16	17
209.1106	CHECK DAM, STONE-PERMANENT	EACH	16	17
209.13	SILT FENCE-TEMPORARY	LF	4,280	3,186.60
304.12	SUBBASE COURSE, TYPE 2	CY	11,840	13,328.78
402.017902	TRUE & LEVELING F9, SUPERPAVE HMA, 70 SERIES COMPACTION	TON	540	98.91
402.017912	PLANT PRODUCTION QUALITY ADJUSTMENT TO 402.017902	QU	27	0.00
402.097302	9.5 F3 TOP COURSE HMA, 70 SERIES COMPACTION	TON	4,220	4,067.83
402.097312	PLANT PRODUCTION QUALITY ADJUSTMENT TO 402.097302	QU	211	22.07
402.197902	19 F9 BINDER COURSE HMA, 70 SERIES COMPACTION	TON	5,350	5,574.95
402.197912	PLANT PRODUCTION QUALITY ADJUSTMENT TO 402.197902	QU	268	30.32
402.377902	37.5 F9 BASE COURSE HMA, 70 SERIES COMPACTION	TON	8,310	9,498.02
402.377912	PLANT PRODUCTION QUALITY ADJUSTMENT TO 402.377902	QU	416	185.49
407.0101	TACK COAT	GAL	5,160	5,523.19
490.10	PRODUCTION COLD MILLING OF BITUMINOUS CONCRETE	SY	17,160	16,316.72
490.30	MISCELLANEOUS COLD MILLING OF BITUMINOUS CONCRETE	SY	620	422.67
520.50140008	SAW CUTTING, ASPHALT PAVEMENT, ASPHALT SURFACE COURSE,CONCRETE PAVEMENT OR ASPHALT OVERLAY ON CONCRETE PAVEMENT	LF	7560	9,054.80
555.0104	FOOTING CONCRETE CLASS A (NO CONCRETE CLASS SUBSTITUTIONSALLOWED, EXCEPT AS PERMITTED IN SUBSECTIO	CY	2	1.5
594.03	TREATED TIMBER AND LUMBER	CF	870	758.99
603.050000MO	RECONNECT EXISTING STORM DRAINS	LF	70	9.9
603.171216	GALVANIZED STEEL END SECTIONS-PIPE (2-2/3" X 1/2"CORRUGATIONS) 18 INCH DIAMETER, 16 GAUGE	EACH	2	2.0
603.171316	GALVANIZED STEEL END SECTIONS-PIPE (2-2/3" X 1/2"CORRUGATIONS) 21 INCH DIAMETER, 16 GAUGE	EACH	2	1.0
603.17143001	1:4 SLP GALVANIZED STEEL END SECTION 30" DIAMETER PIPE(2 2/3" x 1/2") W/BARS FOR 1:4 SLOPES	EACH	2	3.0
603.98100604	POLYVINYL CHLORIDE (PVC) SEWER PIPE & FITTINGS 6" DIAMETER	LF	37	38.0
603.98101204	POLYVINYL CHLORIDE (PVC) SEWER PIPE & FITTINGS 12" DIAMETER	LF	708	126.22
603.98101804	POLYVINYL CHLORIDE (PVC) SEWER PIPE & FITTINGS 18" DIAMETER	LF	1467	1,467.00
604.070401	ADJUST EXISTING SEWER MANHOLE FRAME AND COVER	EA	1	1.0
604.10	PREFABRICATED ADJUSTMENT RINGS FOR MANHOLES	EA	21	21.0
604.11	PREFABRICATED ADJUSTMENT FRAMES FOR DRAINAGE STRUCTURES	EA	50	3.5
604.300211	RECTANGULAR DRAINAGE STRUCTURE TYPE B FOR #11 WELDED FRAME	LF	32.9	39.41
604.300311	RECTANGULAR DRAINAGE STRUCTURE TYPE C FOR #11 WELDED FRAME	LF	5.6	5.57
604.300611	RECTANGULAR DRAINAGE STRUCTURE TYPE F FOR #11 WELDED FRAME	LF	32.9	32.81
604.301911	RECTANGULAR DRAINAGE STRUCTURE TYPE S FOR #11 WELDED FRAME	LF	357.6	356.7
604.4048	ROUND PRECAST CONCRETE MANHOLE TYPE 48	LF	75.3	89.9
604.500401	SPECIAL DRAINAGE STRUCTURE	LF	5.7	5.7

ESTIMATE OF QUANTITIES (CONTINUED)

ITEM NO	DESCRIPTION	PAY UNIT	EST. QUANTITY	FINAL QUANTITY
605.0901	UNDERDRAIN FILTER TYPE 1	CY	1380	1,537.62
605.1502	PERFORATED CORRUGATED POLYETHYLENE UNDERDRAIN TUBING, 6 INCHDIAMETER	LF	9240	8,999.20
605.98101218	SMOOTH INTERIOR PERFORATED CORRUGATED POLYETHYLENEUNDERDRAIN PIPE, 12 INCH DIAMETER	LF	1803	2,454.75
605.98101518	SMOOTH INTERIOR PERFORATED CORRUGATED POLYETHYLENEUNDERDRAIN PIPE, 15 INCH DIAMETER	LF	893	1,053.10
605.98101818	SMOOTH INTERIOR PERFORATED CORRUGATED POLYETHYLENEUNDERDRAIN PIPE, 18 INCH DIAMETER	LF	2,815	2,544.27
605.98102418	SMOOTH INTERIOR PERFORATED CORRUGATED POLYETHYLENEUNDERDRAIN PIPE, 24 INCH DIAMETER	LF	698	701.5
605.98103018	SMOOTH INTERIOR PERFORATED CORRUGATED POLYETHYLENEUNDERDRAIN PIPE, 30 INCH DIAMETER	LF	646	645.3
608.0101	CONCRETE SIDEWALK AND DRIVEWAY	CY	1020	1,103.84
608.020102	HOT MIX ASPHALT (HMA) SIDEWALKS, DRIVEWAYS AND BICYCLE PATHS,AND VEGETATION CONTROL STRIPS	TON	250	420.37
608.020112	PLANT PRODUCTION QUALITY ADJUSTMENT TO 608.020102	QU	12	0.00
608.21	EMBEDDED DETECTABLE WARNING UNITS	SY	38	39.41
609.0203	STONE CURB, GRANITE, (TYPE C)	LF	8,410	9,224.48
609.15	RESETTING EXISTING CURB	LF	6,320	6,065.74
610.020200MO	SEEDING - SEED MIX A	SY	7,940	15,592.71
611.010154	PLANTING MAJOR DECIDUOUS TREE SPECIES (SEE CONTRACTDOCUMENTS) 2" CALIPER B&B,NURSERY GROWN	EACH	9	9.0
611.040113	PLANTING DECIDUOUS SHRUB SPECIES (SEE CONTRACT DOCUMENTS)AS SPECIFIED (SEE CONT DOCUM) CONTAINER/POT	EA	60	60.0
611.050113	PLANTING EVERGREEN SHRUB SPECIES, AS SPECIFIED, AS SPECIFIED(SEE CONTRACT DOCUMENTS)	EA	68	68.0
613.02	PLACING TOPSOIL-TYPE A	CY	700	1,299.39
614.0324	TREE REMOVAL OVER 6" TO 12" DIAM. BREAST HIGH STUMPGRUBBED	EACH	15	30.0
614.0334	TREE REMOVAL OVER 12" TO 18" DIAM. BREAST HIGH STUMPGRUBBED	EACH	18	27.0
614.0344	TREE REMOVAL OVER 18" TO 24" DIAM. BREAST HIGH STUMPGRUBBED	EACH	9	11.0
614.0354	TREE REMOVAL OVER 2' TO 3' DIAM. BREAST HIGH STUMPGRUBBED	EACH	5	8.0
614.0364	TREE REMOVAL OVER 3' TO 4' DIA. BREAST HIGH STUMPGRUBBED	EACH	1	1.0
615.04020008	TREE/VEGETATION PROTECTION BARRIER	LF	3,000	2,734.00
619.01	BASIC WORK ZONE TRAFFIC CONTROL	LS	NEC	NEC
619.04	TYPE III CONSTRUCTION BARRICADE	EACH	12	12.0
619.0801	REMOVE EXISTING PAVEMENT MARKING STRIPES	LF	7000	2,347.00
619.0901	TEMPORARY PAVEMENT MARKINGS STRIPES (TRAFFIC PAINT)	LF	7500	52,217.50
619.1611	MAINTAIN TRAFFIC SIGNAL EQUIPMENT (REQUIREMENT A)	INTM	18	51.5
619.26	PAVEMENT PATCHING, WINTER	CY	8	0.00
619.27	MAILBOXES	EACH	2	2.0
619.400200MO	TEMPORARY PAVEMENT WITH SUBBASE	SF	2870	0.00
621.03	CLEANING CLOSED DRAINAGE SYSTEMS	LF	1,420	1,420.00
624.01	CONVENTIONALLY FORMED OR MACHINE FORMED CONCRETE GUTTERS	SF	900	803.01
625.020000MO	SURVEY & STAKEOUT	LS	NEC	100%
625.070100MO	HORIZONTAL CONTROL SURVEY MONUMENT	EA	11	11.0
625.070200MO	VERTICAL CONTROL SURVEY MONUMENT	EA	1	1.0
625.070400MO	REMOVE EXISTING SURVEY MONUMENT	EA	7	7.0
625.070500MO	INSTALL NEW MONUMENT FRAME AND COVER	EA	4	4.0
625.11nnnn	SURVEY GRADE GPS INSPECTION UNITS	EA	2	0.00
626.060000MO	INSTALL NEW MONUMENT FRAME AND COVER	EA	1	1.0
633.11	CLEANING EXISTING PAVEMENT AND/OR SHOULDERS	SY	7,500	0.00
637.11	ENGINEER'S FIELD OFFICE - TYPE 1	MNTH	8	15.25
637.34	OFFICE TECHNOLOGY AND SUPPLIES	DC	100	419.44
640.11	YELLOW PAINT REFLECTORIZED PAVEMENT STRIPES - 15 MILS	LF	540	924
645.050000MO	SIGN-SLEEVE	EACH	3	3.0
645.5101	GROUND-MOUNTED SIGN PANELS WITHOUT Z-BARS	SF	30	32.5

NO.	DATE	BY:	REVISION
1	06/23	JMW	ADDED FINAL QUANTITY

Barton & Loguidice, P.C.

DRAFTED BY: JMW/JJB

DESGIN BY: JMW

DEPARTMENT OF TRANSPORTATION
50 WEST MAIN STREET, SUITE 6100
ROCHESTER, NEW YORK 14614-1231

UNAUTHORIZED ALTERATION OR ADDITION TO THIS DRAWING IS A VIOLATION OF THE NEW YORK STATE EDUCATION LAW ARTICLE 145, SECTION 7209

PROJECT NAME: WESTFALL ROAD
LIMITS: E. HENRIETTA ROAD TO LAC-DE-VILLE BLVD
TOWN: BRIGHTON
CITY: ROCHESTER
CAPITAL PROJECT NO.: 4753.77
BRIDGE IDENTIFICATION NO.: N.A.

ESTIMATE OF QUANTITIES

SCALE: NOT TO SCALE
DATE ISSUED: 4/25/2014
DRAWING NO. EQ-1
SHEET NO. 11 OF 112

mek
I:\MicroStation\Workspace\PLOT\NYSDOT\NYSDOT_SIZE_B.TBL
I:\MicroStation\Workspace\Plot\NYSDOT\NYSDOT_HPLJ5200_B.plt

FILE NAME = I:\Shared\1000\1066005\AS-BUILTS\1066005-eq_01.dgn
DATE = 4/25/2014
TIME = 9:49:40 AM

ESTIMATE OF QUANTITIES (CONTINUED)

1

ITEM NO	DESCRIPTION	PAY UNIT	EST. QUANTITY	FINAL QUANTITY
645.5102	GROUND-MOUNTED SIGN PANELS LESS THAN OR EQUAL TO30 SF, WITH Z-BARS	SF	450	372.23
645.5202	GROUND-MOUNTED SIGN PANELS LESS THAN OR EQUAL TO30 SF, WITH Z-BARS, HIGH-VISIBILITY SHEETING	SF	40	45.9
645.81	TYPE A SIGN POSTS	EACH	52	65.0
645.85	POLE MOUNTED SIGN SUPPORT SYSTEM (BAND MOUNTED)	EACH	48	49.0
647.01	REMOVAL OF SIGNS - SIZE A (0-10 SQUARE FEET)	EACH	96	96.0
647.11	RELOCATING SIGNS SIZE A (0 TO 10 SQUARE FEET)	EACH	4	3.0
655.05010010	RESETTING EXISTING SANITARY SEWER MANHOLE CASTINGS	EA	15	15.0
655.1011	WELDED FRAME AND RECTANGULAR GRATE 11	EACH	93	66.00
655.1202	MANHOLE FRAME AND COVER	EACH	12	15.0
663.0104	DUCTILE IRON CEMENT LINED WATER PIPE, 4"	LF	20	10.5
663.0106	DUCTILE IRON CEMENT LINED WATER PIPE, 6"	LF	570	535.55
663.0108	DUCTILE IRON CEMENT LINED WATER PIPE, 8"	LF	815	715.5
663.0116	DUCTILE IRON CEMENT LINED WATER PIPE, 16"	LF	15	0.00
663.0604	COPPER WATER SERVICE PIPE 1"	LF	20	19.0
663.0607	COPPER WATER SERVICE PIPE 2"	LF	210	184.57
663.1004	RESILIENT WEDGE VALVE & VALVE BOX, 4"	EACH	2	2.0
663.1006	RESILIENT WEDGE VALVE & VALVE BOX, 6"	EACH	5	6.0
663.1008	RESILIENT WEDGE VALVE & VALVE BOX, 8"	EACH	2	2.0
663.1301	HYDRANT	EACH	1	1.0
663.1302	HYDRANT	EACH	1	1.0
663.1303	HYDRANT	EACH	1	1.0
663.160606	TAPPING SLEEVE, VALVE & VALVE BOX ASSEMBLY, 6" X 6"	EACH	1	1.0
663.160612	TAPPING SLEEVE, VALVE & VALVE BOX ASSEMBLY, 6" X 12"	EACH	2	2.0
663.2001	IRON WATER MAIN FITTINGS (3 " - 8 ")	LB	60	1,349.00
663.2002	IRON WATER MAIN FITTINGS (10" - 16")	LB	10	1,349.00
663.20020004	MAGNESIUM ANODE - 21.8KG	EACH	4	6.0
663.2304	POLYETHYLENE ENCASEMENT FOR WATER PIPE, 4"	LF	20	10.5
663.2306	POLYETHYLENE ENCASEMENT FOR WATER PIPE, 6"	LF	560	535.55
663.2308	POLYETHYLENE ENCASEMENT FOR WATER PIPE, 8"	LF	815	715.5
663.2316	POLYETHYLENE ENCASEMENT FOR WATER PIPE, 16"	LF	15	0.0
663.2504	WATER SERVICE CONNECTION, 1"	EACH	1	1.0
663.2507	WATER SERVICE CONNECTION, 2"	EACH	6	6.0
663.2603	CURB STOP & CURB BOX, 3/4"	EACH	3	0.0
663.2607	CURB STOP & CURB BOX, 2"	EACH	6	6.0
663.33	ADJUST EXISTING VALVE BOX ELEVATION	EACH	48	44.0
663.34	ADJUST EXISTING HYDRANT ELEVATION	EACH	2	2.0
663.40	DISCONNECT AND CAP EXISTING WATER MAIN	EACH	5	6.0
663.42	REMOVE AND DISPOSE OF EXISTING WATER VALVE & VALVE BOX	EACH	9	12.0
663.45	REMOVE AND STORE EXISTING WATER VALVE & VALVE BOX	EACH	2	2.0
663.46	REMOVE AND STORE EXISTING HYDRANT	EACH	3	3.0
663.47	REMOVE AND STORE EXISTING CURB STOP & CURB BOX	EACH	4	4.0
670.03020007	REMOVE AND RELOCATE LAMPPOST ASSEMBLY	EACH	1	1.0
670.80	REMOVE AND STORE LAMPPOST ASSEMBLY	EACH	1	1.0
680.5001	POLE EXCAVATION AND CONCRETE FOUNDATION	CY	40	39.04
680.5002	CONCRETE BASE FOR CONTROLLER CABINET	EACH	2	2.0
680.51000010	ALTER ELEVATION OF PULL BOXES	EACH	9	7.0
680.510301	PULLBOX-CIRCULAR, 24 INCH DIAMETER, REINFORCEDCONCRETE	EACH	3	3.0

ESTIMATE OF QUANTITIES (CONTINUED)

1

ITEM NO	DESCRIPTION	PAY UNIT	EST. QUANTITY	FINAL QUANTITY
680.510401	PULLBOX-CIRCULAR, 30 INCH DIAMETER, REINFORCEDCONCRETE	EACH	20	41
680.520106	CONDUIT, METAL STEEL, ZINC COATED, 2"	LF	70	333
680.520108	CONDUIT, METAL STEEL, ZINC CAOTED, 3"	LF	1,720	2,275.00
680.520110	CONDUIT, METAL STEEL, ZINC COATED, 4"	LF	100	24
680.521606MO	CONDUIT PVC SCHEDULE 80 - 2" DIA	LF	400	383.00
680.521610MO	CONDUIT PVC SCHEDULE 80 - 4" DIA	LF	7,740	7490.00
680.54	INDUCTANCE LOOP INSTALLATION	LF	5,025	4,647.90
680.622040	TRAFFIC SIGNAL POLE, MAST ARM, 20 FEETMOUNTING HEIGHT, 40 FEET ARM LENGTH	EACH	1	1.0
680.622044	TRAFFIC SIGNAL POLE, MAST ARM, 20 FEET MOUNTING HEIGHT, 44 FEET ARM LENGTH	EACH	1	0.00
680.700606	RISER ASSEMBLY, 2" DIAMETER	EACH	3	3.0
680.71	SHIELDED LEAD-IN CABLE	LF	11,300	11,782.00
680.72	INDUCTANCE LOOP WIRE	LF	11,250	12,645.74
680.730714	SIGNAL CABLE 7 CONDUCTORS, 14 AWG	LF	3,180	3,605.00
680.730914	SIGNAL CABLE 9 CONDUCTORS, 14 AWG	LF	1,500	2,584.00
680.79000010	REMOVE TRAFFIC SIGNAL EQUIPMENT	LS	NEC	NEC
680.78010005	ALTER PULLBOX FOR CONDUITS	EACH	7	7.0
680.802708MO	INSTALL 8 PHASE ACTUATED GROUND MOUNTED TRAFFIC SIGNAL CABINET AND RELATED EQUIPMENT	EA	2	2.0
680.809908MO	8 PHASE ACTUATED GROUND MOUNTED TRAFFIC CONTROLLER AND CABINET (PURCHASED FROM MCDOT)	EA	2	2.0
680.810121MO	LED TRAFFIC SIGNAL MODULE - 12" RED BALL	EACH	18	18.0
680.810123MO	LED TRAFFIC SIGNAL MODULE - 12" YELLOW BALL	EACH	18	18.0
680.810125MO	LED TRAFFIC SIGNAL MODULE - 12" GREEN BALL	EACH	18	18.0
680.810128MO	LED TRAFFIC SIGNAL MODULE - 12" BI-MODAL ARROW	EACH	9	9.0
680.810308	INSTALL BALL/ARROW LED TRAFFIC SIGNAL MODULE	EACH	63	63.0
680.810601	TRAFFIC SIGNAL SECTION - POLYCARBONATE, TYPE I, 12 INCH	EACH	63	63.0
680.8111	TRAFFIC SIGNAL BRACKET ASSEMBLY - 1 WAY	EACH	18	18.0
680.811618MO	16" X 18" BI-MODAL PEDESTRIAN SIGNAL, HAND(FULL)/MAN(FULL),	EA	24	24.0
680.813101MO	AUDIBLE/TACTILE PEDESTRIAN PUSH BUTTON	EA	14	14.0
680.813104	INSTALL LED PEDESTRIAN SIGNAL MODULE	EACH	24	26.0
680.813106	PEDESTRIAN SIGNAL SECTION - POLYCARBONATE, TYPE I, 12 INCH	EACH	24	24.0
680.820030MO	MAST ARM TRAFFIC SIGNAL POLE COMBINATION ANCHOR BASE (30')	EACH	6	6.0
680.8210	OVERHEAD SIGN ASSEMBLY, TYPE J	EACH	24	16.0
680.83010005	CLEANING AND PREPARING EXISTING UNDERGROUND CONDUIT	LF	320	0.0
680.853800MO	MAST ARM FOR TRAFFIC SIGNALS, 38 FT LENGTH	EACH	2	2.0
680.854000MO	MAST ARM FOR TRAFFIC SIGNALS, 40 FT LENGTH	EACH	4	4.0
680.90010006	RELOCATING EXISTING SIGNAL POLE	EACH	1	1.0
680.95020615	SERVICE CABLE 2 CONDUCTOR NO. 06 AWG	LF	295	527.0
680.994100MO	GALVANIZED STEEL PEDESTRIAN SIGNAL POLE	EA	1	2.0
680.995101MO	FIBER OPTIC CABLE (PURCHASED FROM MCDOT)	LF	7,740	10,341.00
680.995600MO	ROD AND CLEAN CONDUIT	LF	1,478	0.0
680.996101MO	INSTALL FIBER OPTIC CABLE (FURNISHED)	LF	7,740	9,714.00
685.11	WHITE EPOXY REFLECTORIZED PAVEMENT STRIPES - 20 MILS	LF	6,000	17,425.50
685.12	YELLOW EPOXY REFLECTORIZED PAVEMENT STRIPES - 20 MILS	LF	19,000	20,033.00
688.01	WHITE PREFORMED REFLECTORIZED PAVEMENT STRIPES	LF	11,250	11,002.00
688.04	WHITE PREFORMED REFLECTORIZED PAVEMENT SYMBOLS	EA	71	77.0
698.04	ASPHALT PRICE ADJUSTMENT	DC	100	-12,093.10
698.05	FUEL PRICE ADJUSTMENT	DC	100	-4,816.24
699.040001	MOBILIZATION	LS	NEC	NEC

NO.	DATE	BY:	REVISION
1	10/13	JMW	ADDED FINAL QUANTITY

Barton & Loguidice, P.C.

DRAFTED BY: JMW/JJB

DESIGN BY: JMW

DEPARTMENT OF TRANSPORTATION
50 WEST MAIN STREET, SUITE 6100
ROCHESTER, NEW YORK 14614-1231

UNAUTHORIZED ALTERATION OR ADDITION TO THIS DRAWING IS A VIOLATION OF THE NEW YORK STATE EDUCATION LAW ARTICLE 145, SECTION 7209

PROJECT NAME: WESTFALL ROAD
LIMITS: E. HENRIETTA ROAD TO LAC-DE-VILLE BLVD
TOWN: BRIGHTON
CITY: ROCHESTER
CAPITAL PROJECT NO.: 4753.77
BRIDGE IDENTIFICATION NO.: N.A.

ESTIMATE OF QUANTITIES

SCALE: NOT TO SCALE
DATE ISSUED: 4/25/2014
DRAWING NO. EQ-2
SHEET NO. 12 OF 112

mek
I:\MicroStation\Workspace\PLOT\NYSDOT\NYSDOT_SIZE_B.TBL
I:\MicroStation\Workspace\Plot\NYSDOT\NYSDOT_HPLJ5200.B.plt

FILE NAME = I:\Shared\1000\1066005\AS-BUILTS\1066005_eq_02.dgn
DATE = 4/25/2014
TIME = 9:50:03 AM

ESTIMATE OF QUANTITIES (CONTINUED)				
ITEM NO.	DESCIPTION	PAY UNIT	EST. QUANTITY	FINAL QUANTITY
950.65	ASPHALT PRICE ADJUSTMENT	DC		10,389.34
950.70	FUEL PRICE ADJUSTMENT	DC		3,192.06
950.01	ITEM 950.01 CMP REPAIR NO. 01	DC		2,779.49
950.02	ITEM 950.02 WATER MAIN RELOCATION NO. 01	DC		7,524.92
950.03	ITEM 950.03 WATER MAIN REPAIR NO. 01	DC		1,061.29
950.04	ITEM 950.04 WATER MAIN TS&V REMOVAL	DC		4,530.04
950.05	ITEM 950.05 CMP REPAIR NO. 02	DC		11,174.94
950.06	AJ Berman DWY 10B reset	EA		1.00
950.07	OVERHEAD SIGN ASSEMBLY, TYPE J	EA		10.00
950.08	Material Restrocking (Timber / Pipe)	LS		1.00
950.09	Alter DS units due to utility interference	LS		1.00
950.10	Restore power to lighting	DC		1.00
950.11	Remove pole	EA		1.00
950.12	Profile Milling	DC		12,169.82
670.131	Aluminum truss Arm	EA		2.00
670.302	Pull Box over 10 to 15 Cubic feet inside volume	EA		4.00
670.50124	Luminary H-P sodium STD Mt. Med, 400W	EA		3.00
680.520703	Traffic signal Conduit -1" PVC class 1 or 2	FT		102.00
680.642044	Traffic Signal Pole - Mast Arm with lighting Arm	EA		1.00
	engineering charges	DC		10,919.16

ATTENTION:

The items listed in Column A in the Table below have been removed from the contract. Reference in the plan sheets to these items shall be replaced with the items listed in Column B.

	COLUMN A				COLUMN B		
	ITEM NUMBER	DESCRIPTION	UNIT		ITEM NUMBER	DESCRIPTION	UNIT
REPLACE	C604.05	RECONNECT EXISTING STORM DRAINS	EA	WITH	603.0050000MO	RECONNECT EXISTING STORM DRAINS	EA
REPLACE	S608.12	CONCRETE SIDEWALK AND DRIVEWAY	CY	WITH	608.0101	CONCRETE SIDEWALK AND DRIVEWAY	CY
REPLACE	C610.0202	SEEDING - SEED MIX A	SY	WITH	610.020200MO	SEEDING	SY
REPLACE	C686.04	SIGN POST (12')	EA	WITH	645.81	TYPE A SIGN POSTS	EA
REPLACE	C686.05	SIGN SLEEVE	EA	WITH	645.050000MO	SIGN SLEEVE	EA
REPLACE	C686.07	SIGN POST AND SLEEVE (12')	EA	WITH	645.81	TYPE A SIGN POSTS	EA
REPLACE	C686.3102	TRAFFIC SIGN - SIZE 8" X 30"	EA	WITH	645.5102	GROUND-MOUNTED SIGN PANELS WITHOUT Z-BARS	SF
REPLACE	C686.3201	TRAFFIC SIGN - SIZE 12" X 18"	EA	WITH	645.5101	GROUND-MOUNTED SIGN PANELS WITHOUT Z-BARS	SF
REPLACE	C686.3202	TRAFFIC SIGN - SIZE 12" X 24"	EA	WITH	645.5102	GROUND-MOUNTED SIGN PANELS WITHOUT Z-BARS	SF
REPLACE	C686.3254	TRAFFIC SIGN - SIZE 12" X 42"	EA	WITH	645.5102	GROUND-MOUNTED SIGN PANELS WITHOUT Z-BARS	SF
REPLACE	S686.3255	TRAFFIC SIGN - SIZE 12" X 48"	EA	WITH	645.5102	GROUND-MOUNTED SIGN PANELS WITHOUT Z-BARS	SF
REPLACE	S686.3256	TRAFFIC SIGN - SIZE 12" X 54"	EA	WITH	645.5102	GROUND-MOUNTED SIGN PANELS WITHOUT Z-BARS	SF
REPLACE	S686.3257	TRAFFIC SIGN - SIZE 12" X 60"	EA	WITH	645.5102	GROUND-MOUNTED SIGN PANELS WITHOUT Z-BARS	SF
REPLACE	S686.3258	TRAFFIC SIGN - SIZE 12" X 66"	EA	WITH	645.5102	GROUND-MOUNTED SIGN PANELS WITHOUT Z-BARS	SF
REPLACE	S686.3259	TRAFFIC SIGN - SIZE 12" X 72"	EA	WITH	645.5102	GROUND-MOUNTED SIGN PANELS WITHOUT Z-BARS	SF
REPLACE	S686.3260	TRAFFIC SIGN - SIZE 15" X 21"	EA	WITH	645.5102	GROUND-MOUNTED SIGN PANELS WITHOUT Z-BARS	SF
REPLACE	C686.3302	TRAFFIC SIGN - SIZE 18" X 24"	EA	WITH	645.5102	GROUND-MOUNTED SIGN PANELS WITHOUT Z-BARS	SF
REPLACE	C686.3401	TRAFFIC SIGN - SIZE 24" X 24"	EA	WITH	645.5102	GROUND-MOUNTED SIGN PANELS WITHOUT Z-BARS	SF
REPLACE	C686.3402	TRAFFIC SIGN - SIZE 24" X 30"	EA	WITH	645.5102	GROUND-MOUNTED SIGN PANELS WITHOUT Z-BARS	SF
REPLACE	C686.3403	TRAFFIC SIGN - SIZE 24"X 36"	EA	WITH	645.5102	GROUND-MOUNTED SIGN PANELS WITHOUT Z-BARS	SF
REPLACE	C686.3501	TRAFFIC SIGN - SIZE 30" X 30"	EA	WITH	645.5102	GROUND-MOUNTED SIGN PANELS WITHOUT Z-BARS	SF
REPLACE	C686.3502	TRAFFIC SIGN - SIZE 30"X 36"	EA	WITH	645.5102	GROUND-MOUNTED SIGN PANELS WITHOUT Z-BARS	SF
REPLACE	C686.3902	TRAFFIC SIGN - SIZE 30" OCTAGON	EA	WITH	645.5202	GROUND-MOUNTED SIGN PANELS WITHOUT Z-BARS	SF
REPLACE	C686.41	REMOVAL OF SIGNS - SIZE A (0.0 -10 SF)	EA	WITH	647.01	REMOVAL OF SIGNS - SIZE A (0-10 SQUARE FEET)	EA
REPLACE	C686.46	RELOCATION OF SIGNS - SIZE A (0 TO 10 SF)	EA	WITH	647.11	RELOCATING SIGNS SIZE A (0 TO 10 SQUARE FEET)	EA
REPLACE	C686.520606	CONDUIT PVC SCHEDULE 80	LF	WITH	680.521606MO	CONDUIT PVC SCHEDULE 80	LF
REPLACE	C686.520610	CONDUIT PVC SCHEDULE 80	LF	WITH	680.521610MO	CONDUIT PVC SCHEDULE 80	LF
REPLACE	C686.6026	PEDESTRIAN PUSH BUTTON	EA	WITH	680.813101MO	AUDIBLE/TACTILE PEDESTRIAN PUSH BUTTON	EA
REPLACE	C686.813107	LED TRAFFIC SIGNAL MODULES, BI MODAL PEDESTRIAN SIGNAL, HAND/MAN	EA	WITH	680.811618MO	LED TRAFFIC SIGNAL MODULES, BI MODAL PEDESTRIAN SIGNAL, HAND/MAN	EA
REPLACE	C686.820030	MAST ARM TRAFFIC SIGNAL POLE ANCHOR BASE (22')	CY	WITH	680.8200022MO	MAST ARM TRAFFIC SIGNAL POLE ANCHOR BASE (22')	CY
REPLACE	C686.820031	MAST ARM TRAFFIC SIGNAL POLE COMBINATION ANCHOR BASE (30')	CY	WITH	680.8200030MO	MAST ARM TRAFFIC SIGNAL POLE COMBINATION ANCHOR BASE (30')	CY
REPLACE	C686.8538	MAST ARM TRAFFIC SIGNAL, 38 FT LENGTH	EA	WITH	680.853800MO	MAST ARM TRAFFIC SIGNAL, 38 FT LENGTH	EA
REPLACE	C686.8540	MAST ARM TRAFFIC SIGNAL, 40 FT LENGTH	EA	WITH	680.854000MO	MAST ARM TRAFFIC SIGNAL, 40 FT LENGTH	EA
REPLACE	C686.9941	GALVANIZED STEEL PEDESTRIAN SIGNAL POLE	EA	WITH	680.994100MO	GALVANIZED STEEL PEDESTRIAN SIGNAL POLE	EA
REPLACE	C686.9956	ROD AND CLEAN CONDUIT	LF	WITH	680.995600MO	ROD AND CLEAN CONDUIT	LF
REPLACE	C689.809908	8 PHASE ACTUATED GROUND MOUNTED TRAFFIC CONTROLLER AND CABINET (PURCHASED FROM MCDOT)	EA	WITH	680.809908MO	8 PHASE ACTUATED GROUND MOUNTED TRAFFIC CONTROLLER AND CABINET (PURCHASED FROM MCDOT)	EA
REPLACE	C689.9951	FIBER OPTIC CABLE (PURCHASED FROM MCDOT)	LF	WITH	680.995101MO	FIBER OPTIC CABLE (PURCHASED FROM MCDOT)	LF

NO.	DATE	BY:	REVISION
1	10/13	JMW	ADDED FINAL QUANTITY

Barton & Loguidice, P.C.

DRAFTED BY: JMW/JJB

DESGIN BY: JMW

DEPARTMENT OF TRANSPORTATION
50 WEST MAIN STREET, SUITE 6100
ROCHESTER, NEW YORK 14614-1231

UNAUTHORIZED ALTERATION OR ADDITION TO THIS DRAWING IS A VIOLATION OF THE NEW YORK STATE EDUCATION LAW ARTICLE 145, SECTION 7209

PROJECT NAME: WESTFALL ROAD
LIMITS: E. HENRIETTA ROAD TO LAC-DE-VILLE BLVD
TOWN: BRIGHTON
CITY: ROCHESTER
CAPITAL PROJECT NO.: 4753.77
BRIDGE IDENTIFICATION NO.: N.A.

ESTIMATE OF QUANTITIES

SCALE: NOT TO SCALE
DATE ISSUED: 4/25/2014
DRAWING NO. EQ-2B
SHEET NO. 12B OF 112

mek
I:\MicroStation\Workspace\PLOT\NYSDOT\NYSDOT_SIZE_B.TBL
I:\MicroStation\Workspace\Plot\NYSDOT\NYSDOT_HPLJ5200_B.plt

FILE NAME = L:\Shared\1000\1066005\AS-BUILTS\1066005_eq_02B.dgn
DATE = 4/25/2014
TIME = 9:50:26 AM

GENERAL NOTES:

1. THE CONTRACTOR SHALL FOLLOW THE PROVISIONS OF THE NYSDOT STANDARD SPECIFICATIONS DATED MAY 1, 2008, ALL ADDENDA BULLETS, AND ENGINEERING INSTRUCTIONS DISTRIBUTED BY NYSDOT EXCEPT AS MODIFIED BY THE "CONSTRUCTION CONTRACT DOCUMENTS."

2. ALL AREAS DISTURBED BY THE CONTRACTOR'S OPERATION NOT DESIGNED FOR OTHER TREATMENT SHALL BE FINE GRADED, TOPSOILED AND SEEDED. FINE GRADING SHALL BE SHAPED TO ALLOW FOR SURFACE DRAINAGE AND RETURNED TO ITS ORIGINAL CONDITION.

3. THE CONTRACTOR SHALL BE RESPONSIBLE FOR ALL DAMAGE TO EXISTING PAVEMENT, CURBS, SIDEWALKS, LAWN AREAS, TREES AND OTHER EXISTING FEATURES OUTSIDE OF THE CONSTRUCTION LIMITS CAUSED BY HIS OPERATION. ALL SUCH DAMAGE SHALL BE REPAIRED OR REPLACED IN KIND TO THE SATISFACTION OF THE RESIDENT ENGINEER BY THE CONTRACTOR AT THE EXPENSE OF THE CONTRACTOR.

4. IN ACCORDANCE WITH ITEM 619.01 BASIC WORK ZONE TRAFFIC CONTROL, THE CONTRACTOR SHALL MAINTAIN DRAINAGE FACILITIES AND OTHER HIGHWAY ELEMENTS, OLD OR NEW. THE CONTRACTOR SHALL DEVOTE PARTICULAR ATTENTION TO ALL DRAINAGE FACILITIES KEEPING THEM FULLY OPERATIVE AT ALL TIMES. DITCHES WITH SILT FENCES SHALL BE PROVIDED AT ALL TIMES EVEN DURING GRADING OPERATION AND PERIODS OF ACCUMULATED PLOWED SNOW, TO ADEQUATELY DRAIN THE TRAVELED WAY AND THE REMAINDER OF THE RIGHT-WAY-AREAS.

5. ANY INCIDENTAL ROCK WHICH IS ABLE TO BE REMOVED WITH THE EQUIPMENT BEING USED TO INSTALL THE PIPE, IN TRENCH AND CULVERT EXCAVATION SHALL BE REMOVED AND PAID FOR UNDER ITEM 206.02.

6. EXISTING CATCH BASIN REMOVAL SHALL BE PAID UNDER ITEM 206.02.

7. WHERE GRADING WORK OUTSIDE STREET RIGHT-OF-WAY IS DESIRED; THE RESIDENT ENGINEER IN COOPERATION WITH THE CONTRACTOR MAY BE REQUIRED TO OBTAIN A "GRADING RELEASE" FROM THE PROPERTY OWNERS, IF IT WAS NOT OBTAINED BY MCDOT PRIOR TO THE ADVERTISEMENT OF THE PROJECT. DURING THE COURSE OF CONSTRUCTION, MINOR GRADING AND DRIVEWAY WORK MAY BE REQUIRED OUTSIDE THE PUBLIC RIGHT-OF-WAY; REFERENCE SHOULD BE MADE TO THE APPROPRIATE STANDARD OR PROJECT DETAILS FOR TREATMENT IN GRASS, DRIVEWAY AND SIDEWALK AREAS.

8. THE OWNER SHALL OBTAIN ALL APPLICABLE STATE AND FEDERAL PERMITS UNLESS OTHERWISE SPECIFIED IN THE CONTRACT DOCUMENTS. HOWEVER, THE CONTRACTOR SHALL AT ITS OWN EXPENSE, OBTAIN ALL NECESSARY CITY, TOWN, AND VILLAGE PERMITS. THESE MAY INCLUDE, BUT SHALL NOT BE LIMITED TO ZONING, FILL, BLASTING, HAULING, DISPOSAL, SIGN, UTILITY CONNECTION, AND BUILDING PERMITS. THE CONTRACTOR SHALL SUBMIT COPIES OF ALL LOCAL PERMITS AND LICENSES TO THE RESIDENT ENGINEER PRIOR TO COMMENCEMENT OF WORK.

9. EXISTING CARRIAGE SIDEWALKS SHALL BE EXTENDED TO THE NEW CURB LINE OR REMOVED AS THE PROPERTY OWNER DESIRES OR DIRECTED BE THE RESIDENT ENGINEER.

10. MISCELLANEOUS MINOR CONSTRUCTION REMOVALS WITHIN THE COUNTY'S RIGHT-OF-WAY SUCH AS PRIVATE SIGN POSTS, FENCES, LIGHT POLES AND BASE, ETC., SHALL BE INCLUDED IN THE COST OF ITEM 203.02 UNCLASSIFIED EXCAVATION AND DISPOSAL. THESE ITEMS SHALL BE PLACED ON THE OWNER'S PROPERTY ADJACENT TO THE WORK FOR THE OWNER'S DISPOSITION.

11. TRANSITION CURBS FOR HANDICAP RAMPS SHALL BE A MINIMUM OF 7FT LONG IN ADJACENT CONCRETE SIDEWALK AREAS. HEADER CURBS SHALL BE INSTALLED FLUSH WITH FINISHED PAVEMENT GRADED. ALL SIDEWALK RAMPS SHALL BE FIELD VERIFIED AND CONSTRUCTED TO PROVIDE FOR RAMP GRADES NO STEEPER THAN 1 ON 12, MEETING "ADA REGULATIONS. TRANSITION CURBS MAY NEED TO BE LONGER THAN 7 FT TO INSURE THAT RESULTING TRANSITION AND RAMP GRADES DO NOT EXCEED 1 ON 12. FLATTER RAMP GRADES ARE DESIRABLE WHEREVER POSSIBLE.

12. THE CONTRACTOR WILL BE REQUIRED TO COMPLETE ALL TOPSOIL, SEEDING, SIDEWALK AND DRIVEWAY WORK PRIOR TO THE PLACEMENT OF THE TOP COURSE OF ASPHALT. ALL WORK WHICH MAY IMPACT THE INTEGRITY OF THE FINISHED ASPHALT WORK MUST BE COMPLETED PRIOR TO FINAL TOP PAVING, WITHOUT EXCEPTION.

13. THE CONTRACTOR SHALL NOT KEEP AREA RESIDENTS FROM USING THEIR DRIVEWAYS FOR MORE THAN THREE (3) DAYS. IT SHALL BE THE CONTRACTOR'S RESPONSIBILITY TO NOTIFY HOMEOWNERS IN WRITING WHEN ACCESS TO THEIR RESIDENCES WILL NOT BE POSSIBLE AT LEAST 24 HOURS IN ADVANCE.

SURVEY NOTES:

1. THE LOCATIONS OF PROPERTY LINES SHOWN ON THIS SET OF PLANS ARE APPROXIMATE. THE PROPERTY LINE LOCATIONS WERE DETERMINED FROM PLAT, TAX MAP RECORDS, AND DEED PLOTS.

2. ALL RIGHT-OF-WAY MONUMENTS AND PROPERTY CORNERS SHALL BE SAFEGUARDED AND PRESERVED. ALL PROPERTY CORNERS THAT ARE DISTURBED BY THE CONTRACTOR DURING CONSTRUCTION ARE TO BE REPLACED AND CERTIFIED BY A N.Y.S. LICENSED SURVEYOR AT THE CONTRACTOR'S EXPENSE.

3. ANY IRON PINS, CONCRETE MONUMENTS, SURVEY MONUMENTS OR OTHER ITEMS DEFINING PROPERTY LINES OR BASELINES WHICH ARE DISTURBED BY CONSTRUCTION OPERATIONS SHALL BE PROPERLY TIED AND ACCURATELY RESET UPON COMPLETION OF WORK IN ACCORDANCE WITH SPECIAL SPECIFICATION 626.0X0000MO - "SURVEY MONUMENTS" AND SPECIAL SPECIFICATION 625.07XX00MO -"SURVEY MONUMENTS" WITHIN THE CITY OF ROCHESTER.

4. ALL OLD MONUMENTS, FRAMES, AND COVERS SHALL BECOME THE PROPERTY OF THE MONROE COUNTY DEPARTMENT OF TRANSPORTATION AND SHALL BE MADE AVAILABLE FOR PICK-UP.

5. NEW CITY OF ROCHESTER MONUMENTS SHALL BE PLACED AT NEW ANGLE POINTS IN THE STREET RIGHT OF WAY PER THE CITY ENGINEER AND CITY SURVEYOR.

EMERGENCY ACCESS NOTES:

1. AT LEAST ONE 10 FT WIDE, TRAVEL LANE OF SERVICEABLE ROAD IN THE WEST DIRECTION MUST BE MAINTAINED THROUGHOUT THE PROJECT AREA AT ALL TIMES FOR EMERGENCY VEHICLES. AUTHORITIES RESPONSIBLE FOR EMERGENCY SERVICES MUST BE NOTIFIED IN ADVANCED OF A SUBSTANTIAL CHANGE IN TRAFFIC PATTERNS. WORK ON THE SIDE OF THE HIGHWAY SHALL BE COMPLETED PRIOR TO ESTABLISHING A WORK AREA ON THE OPPOSITE SIDE.

PAVEMENT NOTES:

1. WHEN MATCHING INTO EXISTING PAVEMENT GRADES, CONTRACTOR SHALL SAW CUT THE EXISTING PAVEMENT WITH A NEAT, STRAIGHT VERTICAL EDGE. THE CONTRACTOR SHALL TRANSITION NEW PAVEMENT GRADES TO MATCH EXISTING PAVEMENT GRADES, SAW CUT A MINIMUM OF 2". THE COST TO CONSTRUCT AND SEAL THE JOINT SHALL BE INCLUDED IN THE ASSOCIATED ASPHALT ITEMS.

2. PRIOR TO PAVING SIDE STREETS, THE CONTRACTOR SHALL SAW CUT A NEAT STRAIGHT JOINT ACROSS INTERSECTION, AT FULL DEPTH OF THE TOP COURSE. PAVING UP TO ROLLED OVER EDGES FROM PREVIOUS MAINLINE PAVING OPERATIONS WILL NOT BE ACCEPTABLE. THE COST TO SAW CUT, TACK COAT (IF NECESSARY) AND SEAL THESE JOINTS SHALL BE INCLUDED IN THE UNIT PRICE BID FOR THE ASPHALT ITEMS. NO SEPARATE PAYMENT WILL BE MADE FOR THIS WORK.

3. AT ALL PAVEMENT LIMIT LINES A JOINT SEALER SHALL BE INSTALLED. THE COST TO CONSTRUCT THESE JOINTS ALONG WITH SEALING ALL JOINTS (INCLUDING JOINTS AT CENTERLINE OR JOINTS AT MAIN LINE TO SIDE STREET) SHALL BE INCLUDED IN THE PAYMENT FOR ASPHALT TOP COURSE.

4. SAW CUTS MADE IN THE ROADWAY ARE TO BE FULL DEPTH, WITH ALL OTHER SAW CUTS BEING A MINIMUM OF 2 INCH IN DEPTH. SAW CUTS ARE TO BE MADE WHERE REQUIRED ON THE PLANS AND AS SHOWN ON THE DETAILS. THE COST OF ALL SAW CUTS IS TO BE INCLUDED IN THE RESPECTIVE WORK RELATED ITEM(S). ALL SAW CUTS ARE TO BE SEALED WITH AN ASPHALT FILLER PER NYSDOT MATERIAL DESIGNATION 702-3401, THE COST OF WHICH IS TO BE INCLUDED IN THE UNIT PRICE BID FOR THE RESPECTIVE WORK RELATED ITEM(S).

5. WHERE SIDEWALKS, DRIVEWAYS, AND OTHER PAVED AREAS ARE NOTED TO BE REMOVED ON THE PLANS, THE PAYMENT SHALL BE MADE BY THE RESPECTIVE ITEMS FOR UNCLASSIFIED EXCAVATION, TOPSOIL INSTALLATION, AND SEEDING OR OTHER DESIGNATED SURFACE TREATMENT.

6. SAWCUTTING SHALL BE REQUIRED FOR ALL TRENCH WORK OUTSIDE THE RECONSTRUCTION AREAS. NEW GUTTER EDGES ABUTTING GUTTERS TO BE RETAINED, SIDE STREET WORK LIMITS, DRIVEWAY WORK LIMITS AND ALONG NEW CURBS IN PAVEMENT REHABILITATION AND MILLING AREAS.

7. BLENDING THE NEW CURBING TO THE EXISTING CURB SHALL BE DONE WITH A 7FT TRANSITION PIECE OF CURBING. THE TRANSITION PIECE SHALL END AT THE CONTRACT LIMITS OR AS SHOWN ON THE PLANS.

8. PRIOR TO THE PLACEMENT OF THE ROADWAY STONE SUBBASE COURSE, THE SUBGRADE SHALL BE PROOF-ROLLED TO INSURE A STABLE CONDITION. THE CONTRACTOR SHALL REPAIR ANY DEFECT IN THE SUBGRADE CONDITION PRIOR TO PLACEMENT OF THE STONE SUBBASE COURSE AS DIRECTED BY RESIDENT ENGINEER. THE CONTRACTOR SHALL ALSO SHAPE THE SUBGRADE TO THE PROPOSED CROSS SLOPE AND PROFILE PRIOR TO THE PLACEMENT OF ANY SUBBASE COURSE MATERIALS.

9. ALL BACKFILL MATERIAL, AND PAVEMENT SUBBASE MATERIAL SHALL BE PLACED IN 6 INCH LIFTS AND THOROUGHLY COMPACTED TO 95% OF MAXIMUM DENSITY AT OPTIMUM MOISTURE CONTENT AS DETERMINED BY ASTM D-1557. THE PROCTOR VALUE AND OPTIMAL MOISTURE CONTENT OF THE APPROVED SUBBASE MATERIAL WILL BE OBTAINED BY CONTRACTOR AND PROVIDED TO THE OWNER IN A TIMELY MANNER AT NO ADDITIONAL COST. THE FIELD TESTING OF THE SUBBASE STONE COMPACTION WILL BE PERFORMED BY THE OWNER.

10. CONTAMINATION OF THE SUBBASE PRIOR TO ASPHALT, CURB, AND SIDEWALK CONSTRUCTION WILL BE REPLACED AT THE CONTRACTOR'S EXPENSE.

11. MATERIAL FOR SUBBASE COURSES (NYSDOT SECTION 304-2.02) SHALL CONSIST OF STONE WHICH IS THE PRODUCT OF CRUSHING LEDGE ROCK.

EROSION CONTROL NOTES:

1. ALL EROSION CONTROL ITEMS REQUIRED ON THE PLANS, IN THE SPECIFICATIONS, OR AS ORDERED BY THE RESIDENT ENGINEER SHALL BE PAID BY THE SEPARATE INDIVIDUAL PAY ITEMS IN THE CONTRACT. THE CONTRACTOR IS RESPONSIBLE TO INSTALL, MAINTAIN, AND REMOVE ALL EROSION CONTROL DEVICES. EROSION CONTROL ITEMS SHALL REMAIN IN PLACE UNTIL ORDERED TO BE REMOVED BY THE RESIDENT ENGINEER.

2. EROSION CONTROL AND SEDIMENTATION FACILITIES HAVE BEEN DESIGNED IN ACCORDANCE TO "NEW YORK" -GUIDELINES FOR URBAN EROSION AND SEDIMENT CONTROL" APRIL 1997. THE CONTRACTOR SHALL REFER TO THESE GUIDELINES FOR INSTALLATION AND MAINTENANCE OF THESE FACILITIES.

3. ALL EROSION CONTROL AND SEDIMENTATION FACILITIES SHALL BE COMPLETED TO THE SATISFACTION OF THE RESIDENT ENGINEER PRIOR TO COMMENCEMENT OF WORK WITHIN EACH WORK AREA.

4. THE CONTRACTOR SHALL RESTRICT GRADING OPERATIONS TO AREAS INDICATED ON THE CONTRACT DRAWINGS, PERFORMING WORK OUTSIDE THE IDENTIFIED LIMITS SHALL NOT BE PERMITTED WITHOUT APPROVAL OF THE RESIDENT ENGINEER.

5. TOPSOIL STOCKPILES SHALL BE SEEDED WITH A "QUICK GROW" SEED MIXTURE. A SEDIMENTATION BARRIER SHALL BE PLACED AROUND THE STOCKPILE.

6. FOR SEDIMENT BARRIERS, THE CONTRACTOR MAY UTILIZE STRAW BALE BERMS, SILT FENCE OR A COMBINATION OF THE TWO. THE CONTRACTOR SHALL BE REQUIRED TO FOLLOW THE DETAILS OF THESE ITEMS WITHOUT EXCEPTION OR WAIVERS.

7. THE CONTRACTOR IS REQUIRED TO TOPSOIL, SEED, AND MULCH ALL DISTURBED AREAS AS SOON AS POSSIBLE AFTER GRADING TO THE SATISFACTION OF THE RESIDENT ENGINEER AND AS PER S.P.D.E.S. PERMIT REQUIREMENTS.

8. THE CONTRACTOR SHALL COMPLY WITH ALL PROVISIONS OF THE N.Y.S. DEPARTMENT OF ENVIRONMENTAL CONSERVATION WATER QUALITY CERTIFICATION AND/OR FRESH WATER WETLANDS PERMIT AND/OR CORPS OF ENGINEERS' PERMIT (IF APPLICABLE).

9. ALL STREAM CHANNEL WORK SHALL BE LIMITED TO WITHIN THE DESIGNATED RIGHT-OF-WAY, EASEMENT, OR T.O. LIMITS, OR RELEASE.

10. STRAW BALE DIKES MAY BE SUBSTITUTED FOR SILT FENCE AS APPROVED BY THE ENGINEER.

11. PERIODIC CLEANING AND INSPECTION OF TEMPORARY SOIL AND EROSION AND SEDIMENT CONTROL DEVICES SHALL BE NECESSARY, A.O.B.E. ADDITIONAL EROSION AND SEDIMENT CONTROL MEASURES MAY BE RQUIRED DUE TO VARIATION IN SITE CONDITIONS, A.O.B.E..

12. STRAW BALE AND/OR SILT FENCES INSTALLED ALONG WORK LIMITS FOR THE PURPOSES OF SLOWING OVERLAND (SHEET) FLOW SHALL BE ARRANGED PERPENDICULAR TO THE DIRECTION OF THE SHEET FLOW. SUCH INSTALLATION MAY REQUIRE SHORT, STAGGERED SEGMENTS OF FENCE IN ORDER TO BE LOCATED WHOLLY WITHIN THE DESIGNATED WORK LIMITS.

SPECIFICATIONS:

1. THE FOLLOWING IS A LIST OF SPECIFICATIONS SOURCES USED WITHIN THE CONTRACT DOCUMENTS:

   - CXXX.XX - MONROE COUNTY SPECIFICATION LOCATED IN CONTRACT PROPOSAL BOOK
   - SXXX.XX - CITY OF ROCHESTER OR SPECIAL SPECIFICATION LOCATED IN CONTRACT PROPOSAL BOOK
   - XXX.XXYYZZXX - NEW YORK SPECIAL SPECIFICATION LOCATED IN CONTRACT PROPOSAL BOOK
   - XXX.XX - NEW YORK STATE STANDARD SPECIFICATION LOCATED IN THE NEW YORK STATE STANDARD SPECIFICATIONS MAY 1, 2008.

UTILITY NOTES:

1. THE CONTRACTOR SHALL ESTABLISH AND MAINTAIN COMMUNICATION WITH AND COORDINATE WORK WITH THE FOLLOWING UTILITY COMPANIES FOR THE DURATION OF THE PROJECT:

UTILITY COMPANY	CONTACT PERSON	TELEPHONE NUMBER
RGE ELECTRIC	JAIME KALL	771-4066
RGE GAS	LEONARD LENZI	771-4609
TWC CABLE	BILL LEWIS	756-1310
FRONTIER TELEPHONE	JOSEPH KIRCHNER	777-7439
MCWA	DAVID SPRAGUE	442-2001 EXT.248
TOWN OF BRIGHTON	TIM KEEF P.E.	784-5223
ROCHESTER WATER BUREAU	MICHAEL BUSHART, P.E.	428-7567
CITY OF ROCHESTER	JAMES MCINTOSH, P.E.	428-6828

2. THE ADJUSTMENT, RELOCATION, OR REPLACEMENT OF EXISTING TELEPHONE, ELECTRIC, CABLE T.V. OR GAS FACILITIES SHALL BE PERFORMED BY THE PRIVATE UTILITY COMPANIES. THE UTILITY COMPANIES MUST BE INFORMED OF THE EXACT LOCATION OF ANY UTILITIES THAT ARE TO BE ADJUSTED, RELOCATED, OR REPLACED. THE CONTRACTOR SHALL COORDINATE ANY WORK TO BE PERFORMED BY THE UTILITY COMPANIES THAT IS TO BE DONE DURING THE CONSTRUCTION OF THE PROJECT.

3. EXISTING UTILITIES (LOCATIONS, SIZES, AND INVERTS) SHOWN ON THE PLANS HAVE BEEN PLOTTED FROM FIELDS SURVEYS AND RECORD MAPS AND ARE NOT CERTIFIED AS TO THE ACCURACY OF THEIR LOCATION OR COMPLETENESS. THE CONTRACTOR SHALL BE RESPONSIBLE FOR DETERMINING THE EXACT LOCATIONS DEPTHS OF ALL UTILITIES AND STRUCTURES IN THE PATH OF OR CLOSELY PARALLEL TO OR UNDER THE PROPOSED CONSTRUCTION. IT IS THE CONTRACTOR'S RESPONSIBILITY TO NOTIFY THE VARIOUS UTILITY OWNERS IN AMPLE TIME FOR THEM TO LOCATE AND MARK THEIR FACILITIES. THE CONTRACTOR SHALL ALSO NOTIFY CONTROL STAKEOUT AT LEAST 48 HOURS IN ADVANCE OF COMMENCING ANY WORK (DIG SAFELY NEW YORK TELEPHONE NO. 1-800-962-7962 OR BY CALLING 811) AND ANY UTILITIES NOT SERVED BY DIG SAFELY NEW YORK.

4. THE LOCATION DEPTHS, AND DATA AS TO UNDERGROUND CONDITIONS HAVE BEEN OBTAINED FROM RECORDS, SURFACE INDICATIONS, AND DATA FURNISHED BY OTHERS. THE CONTRACTOR SHALL BE AWARE THAT PAVEMENT TEST BORING DATA IS AVAILABLE FOR THIS PROJECT IN THE CONTRACT SPECIFICATIONS.

5. THE CONTRACTOR SHALL TAKE ALL PRECAUTIONS NECESSARY TO PRESERVE THE INTEGRITY OF EXISTING UTILITIES TO REMAIN AND SHALL PROVIDE UNINTERRUPTED SERVICE TO ALL USERS OF THE EXISTING UTILITIES. EXISTING UTILITIES TO REMAIN, ENCOUNTERED IN TRENCH OR PAVEMENT RECONSTRUCTION EXCAVATIONS SHALL BE SUPPORTED AS NECESSARY OR AS ORDERED BY THE RESIDENT ENGINEER. THE COST FOR SUPPORTING UTILITIES SHALL BE INCLUDED IN THE PRICE BID FOR EXCAVATION ITEMS. THE CONTRACTOR SHALL BE RESPONSIBLE FOR DAMAGE TO THESE UTILITIES CAUSED BY THEIR OPERATIONS AND IF THE NATURE OF THE DAMAGE IS SUCH AS TO ENDANGER THE SATISFACTORY OPERATIONS OF THESE UTILITIES, REPAIRS MUST BE BY THE CONTRACTOR OR THE UTILITY COMPANY, AS DETERMINED BY THE RESPECTIVE OWNING UTILITY COMPANY. ANY COST BORNE BY THE UTILITY COMPANY FOR THESE REPAIRS SHALL BE THE RESPONSIBILITY OF THE CONTRACTOR.

6. THE CONTRACTOR SHALL VERIFY BY FIELD SURVEY ALL EXISTING INVERT ELEVATIONS ON SEWERS TO BE CONNECTED PRIOR TO THE START OF CONSTRUCTION AND SUBMIT THEM TO THE RESIDENT ENGINEER.

7. ALL EXISTING SANITARY OR STORM SEWER LATERALS ENCOUNTERED DURING CONSTRUCTION SHALL BE PROTECTED FROM DAMAGE AND RECONNECTED TO MAIN SEWER AS ORDERED BY THE RESIDENT ENGINEER.

8. ALL OLD INLET FRAMES, GRATES, AND CAPSTONES AND MANHOLE FRAMES AND COVERS SHALL BECOME THE PROPERTY OF THE MONROE COUNTY DEPARTMENT OF TRANSPORTATION AND SHALL BE MADE AVAILABLE FOR PICK-UP.

9. THE CONTRACTOR SHALL VERIFY THAT THE EXISTING CATCH BASIN LATERALS, WHICH ARE TO REMAIN IN USE, ARE OPERABLE BY CLEANING AND FLUSHING THE LATERALS. THE COST SHALL BE INCLUDED IN THE VARIOUS DRAINAGE ITEMS.

SEWER NOTES:

1. EXISTING SEWER MANHOLES TO REMAIN WITHIN THE WORK LIMITS SHALL BE ADJUSTED AS REQUIRED TO FINISH GRADE. (NOTE: THE CONTRACTOR MAY HAVE TO REMOVE OR ADD COURSES OF BLOCK OR BRICK, OR REPLACE THE CONCRETE SLAB COVER OR RISER SECTION IN ORDER TO ADJUST THE FRAMES AND COVERS TO THE REQUIRED FINISH GRADE IN ACCORDANCE WITH DETAILS SHOWN ON THE PLANS.)

"I hereby certify by my signature and seal below, that I have prepared this record drawing which is, to the best of my knowledge and in my professional opinion, a true representation of the work as constructed on the Westfall Road Improvements Phase III, Project No. 1409."

STATE OF NEW YORK · MATTHEW J. SCHAFER · No. 069983 · LICENSED PROFESSIONAL ENGINEER

NO.	DATE	BY:	REVISION

NO AS-BUILT REVISIONS

Barton & Loguidice, P.C.

DRAFTED BY: JMW/JJB

DESIGN BY: JMW

DEPARTMENT OF TRANSPORTATION
50 WEST MAIN STREET, SUITE 6100
ROCHESTER, NEW YORK 14614-1231

UNAUTHORIZED ALTERATION OR ADDITION TO THIS DRAWING IS A VIOLATION OF THE NEW YORK STATE EDUCATION LAW ARTICLE 145, SECTION 7209

PROJECT NAME: WESTFALL ROAD
LIMITS: E. HENRIETTA ROAD TO LAC-DE-VILLE BLVD
TOWN: BRIGHTON
CITY: ROCHESTER
CAPITAL PROJECT NO.: 4753.77
BRIDGE IDENTIFICATION NO.: N.A.

GENERAL NOTES

SCALE: NOT TO SCALE
DATE ISSUED: 4/25/2014
DRAWING NO. GN-1
SHEET NO. 13 OF 112

mek
I:\MicroStation\Workspace\PLOT\NYSDOT\NYSDOT_SIZE_B.TBL
I:\MicroStation\Workspace\Plot\NYSDOT\NYSDOT_HPLJ5200_B.plt
FILE NAME = I:\Shared\1000\1066005\AS-BUILTS\1066005-gn_01.dgn
DATE = 4/25/2014
TIME = 9:50:51 AM

GENERAL WATER MAIN NOTES:

1. THE COST OF PROVIDING ANY ADDITIONAL TEMPORARY PIPES, VALVES, PLUGS, TAPS, CORPORATION STOPS, CURBS STOPS, AND BOXES, BLOW-OFF PIPES AND OTHER FITTINGS NECESSARY (UNLESS OTHERWISE NOTED) FOR THE CONSTRUCTION OF THE NEW WATER MAIN OR PROVIDING CONTINUOUS DOMESTIC AND FIRE SERVICE SHALL BE INCLUDED IN THE PRICE BID FOR WATER MAIN ITEMS.

2. THE CONTRACTOR SHALL BE RESPONSIBLE FOR SUPPLYING ALL EXTRANEOUS MATERIAL, TOOLS AND EQUIPMENT, INCLUDING SPECIAL CUTTING DEVICES NECESSARY TO DO WATER WORK CONTAINED IN THIS CONTACT.

3. THE CONTRACTOR SHALL EXERCISE CAUTION WHEN WORKING NEAR EXISTING WATER MAINS WHICH ARE TO BE RETAINED IN SERVICE. NO VIBRATORY EQUIPMENT IS TO BE USED OVER OR ADJACENT (WITHIN A 5 FOOT HORIZONTAL DISTANCE) OF EXISTING WATER MAINS. ANY DAMAGE TO EXISTING WATER FACILITIES WILL BE REPAIRED AT THE CONTRACTOR'S EXPENSE.

4. THE LOCATIONS, SIZES AND ELEVATIONS OF EXISTING UTILITIES ARE BASED ON INFORMATION COMPILED BY THE VARIOUS UTILITIES, WITH FIELD CHECKING WHERE NECESSARY AND POSSIBLE. THE ACCURACY OF THIS INFORMATION IS NOT GUARANTEED AND IS APPROXIMATE. BEFORE BEGINNING ANY EXCAVATION OR BLASTING, CALL U.F.P.O. 1-800-962-7962 OR 811.

5. THE APPROXIMATE LOCATION OF THE PROPOSED WATER MAIN IS INDICATED ON THE PLANS, BUT THE ACTUAL LOCATION WILL BE GOVERNED BY THE LOCATION OF UNDERGROUND UTILITIES OR OTHER CONTROLLING FACTORS AS DETERMINED BY THE ENGINEER DURING CONSTRUCTION.

6. ALL MECHANICAL JOINTS MUST BE MADE USING MEGALUG-TYPE RETAINER GLANDS (RODS ARE NOT ACCEPTABLE) AND ALL FITTINGS MUST BE BACKED BY ADEQUATELY SIZED CONCRETE THRUST BLOCKS. CONCRETE STRENGTH FOR THRUST BLOCKS SHALL BE A MINIMUM OF 2500 PSI.

7. APPROVED PLANS OF PROPOSED FACILITIES WITHIN OR ADJACENT TO THE ROW SHALL NOT BE CHANGED WITHOUT THE PRIOR APPROVAL BY THE PROJECT MANAGER.

8. MAINTAIN DRAINAGE THROUGHOUT THE PERIOD OF CONSTRUCTION.

9. MAINTAIN SAFE AND CONTINUOUS THROUGH TRAFFIC, INGRESS AND EGRESS FOR ADJACENT OWNER DRIVEWAY, SERVICE ROADS AND PUBLIC STREETS THROUGHOUT THE PERIOD OF CONSTRUCTION.

10. LOCATE, FLAG AND PRESERVE SURVEY MONUMENTS. SEE LOCATION AS SHOWN ON PLANS, OR INQUIRE AT THE OFFICE OF GEODETIC SURVEYS COUNTY DEPARTMENT OF ENGINEERING.

11. WHEN INSTALLING HYDRANTS OR BLOW-OFFS, PLUG WEEP HOLES (DRAINS) WHEN GROUND WATER IS ENCOUNTERED WITHIN 7FT OF THE FINISHED GRADE.

12. THE WATER SHALL BE PRESSURE/LEAKAGE TESTED IN ACCORDANCE WITH THE MINIMUM REQUIREMENTS OF THE AWWA STANDARD C600 (LATEST REVISION) OR IN ACCORDANCE WITH MORE STRINGENT REQUIREMENTS IMPOSED BY THE SUPPLIER OF WATER.

13. THE WATER MAIN SHALL BE DISINFECTED EQUAL TO AWWA STANDARD SPECIFICATION FOR DISINFECTING WATER MAINS DESIGNATION C651 BY USING THE CONTINUOUS FEED METHOD. FOLLOWING DISINFECTION, THE WATER MAIN SHALL BE FLUSHED UNTIL CHLORINE MEASUREMENTS SHOW THAT THE CONCENTRATION IN THE WATER LEAVING THE MAIN IS NO HIGHER THAN THAT GENERAL PREVAILING IN THE SYSTEM. UPON COMPLETION OF DISINFECTION AND FLUSHING, THE MONROE COUNTY DEPARTMENT OF HEALTH WILL COLLECT BACTERIOLOGICAL SAMPLES FOR TOTAL AND FECAL COLIFORM AND 24 HOURS BACTERIAL PLATE COUNT. THE SAMPLING POINT(S) MUST BE DECONTAMINATED BY FLAMING. SAMPLES OF WATER MUST BE COLLECTED FROM THE MAIN AND EACH BRANCH. FIRE HYDRANTS ARE NOT ACCEPTABLE SAMPLING POINTS. THE WATER MAIN SHALL NOT BE PLACED IN SERVICE UNTIL SO AUTHORIZED, IN WRITING, BY THE MONROE COUNTY DEPARTMENT OF HEALTH AND MCWA.

14. WHEN CONNECTING NEW WATER MAINS, SERVICES 4 INCHES AND LARGER AND HYDRANT BRANCHES TO EXISTING WATER MAINS. THE INTERIOR OF NEW PIPE, OPEN PIPE ENDS, SLEEVES, SADDLES, VALVES AND ALL FITTINGS USED TO MAKE THE CONNECTION SHALL BE SWAB DISINFECTED USING A 5 PERCENT HYPOCHLORITE (BLEACH) SOLUTION WHENEVER THESE APPURTENANCES HAVE NOT BEEN SUBJECTED TO THE 24 HOUR DISINFECTION CONTACT PERIOD. THE SOLUTION SHALL BE APPLIED NO MORE THAN 30 MINUTES PRIOR TO INSTALLATION.

15. THE MONROE COUNTY DEPARTMENT OF HEALTH MUST RECEIVE AT LEAST 48-HOURS ADVANCE NOTIFICATION REQUESTING SAMPLING SERVICES. SAMPLING WILL NOT BE PERFORMED BY THE MONROE COUNTY DEPARTMENT OF HEALTH PRIOR TO RECEIPT FROM A NEW YORK STATE LICENSED OR REGISTERED DESIGN PROFESSIONAL (ENGINEER, ARCHITECT OR LAND SURVEYOR WITH SPECIAL EXEMPTION UNDER SECTION 7208(N) OF THE EDUCATION LAW) CERTIFYING THAT THE WATER SUPPLY IMPROVEMENTS, TESTING AND DISINFECTION PROCEDURES WERE COMPLETED IN ACCORDANCE WITH THE APPROVED PLANS, REPORTS, SPECIFICATIONS AND ANY APPROVED AMENDMENTS. THE DEPARTMENT WILL COLLECT SAMPLES FOR FREE CHLORINE RESIDUAL, TOTAL FECAL COLIFORM AND 24 HOURS BACTERIAL PLATE COUNT.

16. THE CONTRACTOR SHALL TAKE ALL PRECAUTIONS NECESSARY TO SOLIDLY BRACE THE EXISTING WATER MAIN TO INSURE NO HORIZONTAL OR VERTICAL MOVEMENT OF THE EXISTING WATER MAIN WHILE THE ADJACENT NEW WATER MAIN BEING INSTALLED (THE COST OF ADEQUATELY BRACING THE EXISTING WATER MAIN SHALL BE INCLUDED IN THE PRICE BID FOR EXCAVATION).

17. APPROPRIATE MEASURES SHALL BE TAKEN TO PREVENT DIRT, DEBRIS AND GROUND WATER FROM CONTAMINATING THE WATER MAIN. THE GROUND WATER LEVEL SHALL NEVER BE LESS THAN 12 INCHES BELOW THE PIPE INVERT. WHENEVER AN OPEN PIPE END IS UNATTENDED IT SHALL BE COVERED IN WATER A TIGHT MANNER.

18. ALL NEW WATER MAIN, HYDRANT BRANCHES AND SERVICES 4 INCHES AND LARGER ARE TO BE INSTALLED WITH POLYETHYLENE TUBE ENCASEMENT (8 MIL. THICK). POLY WRAP SHALL BE POLYETHYLENE AWWA C105. ANY DAMAGE TO THE POLY WRAP MUST BE REPAIRED TO THE SATISFACTION OF THE RESIDENT ENGINEER PRIOR TO BACKFILLING.

19. THE MAXIMUM DISTANCE BETWEEN DISINFECTION/SAMPLING TAPS ON NEW WATER MAIN PIPE IS 1000 FT.

20. VERTICAL SEPARATION BETWEEN WATER MAINS AND SEWER PIPELINES (MEASURED FROM THE OUTSIDE OF THE PIPES AT THE POINT OF CROSSING) SHALL BE 18 INCHES (MIN) WHEN WATER UTILITY CROSSES UNDER SEWER PIPE AND 6 INCHES (MIN) WHEN WATER UTILITY CROSSES OVER SEWER PIPE. ONE FULL STANDARD LAYING LENGTH OF WATER MAIN SHALL BE CENTERED UNDER OR OVER THE SEWER SO THAT BOTH JOINTS WILL BE AS FAR FROM THE SEWER AS POSSIBLE. IN ADDITION, WHEN THE WATER MAIN PASSES UNDER THE SEWER, ADEQUATE STRUCTURAL SUPPORT (COMPACTED SELECT FILL) SHALL BE PROVIDED FOR THE SEWER TO PREVENT EXCESSIVE DEFLECTION OF JOINTS AND SETTING OF THE SEWER ON THE WATER MAIN. MINIMUM HORIZONTAL SEPARATION BETWEEN PARALLEL WATER MAINS AND SEWER PIPES (INCLUDING MANHOLES AND VAULTS) SHALL BE 10 FT WHEN MEASURED FROM THE OUTSIDE OF THE PIPES, MANHOLES OR VAULTS.

GENERAL WATER MAIN NOTES (CONT'D):

21. THE CONTRACTOR SHALL REMOVE WATER MAINS, SERVICES AND APPURTENANCES TO BE ABANDONED WHEN THEY ARE WITHIN THE LIMITS OF PAVEMENT RECONSTRUCTION EXCAVATIONS OR WITHIN TRENCH EXCAVATION LIMITS FOR NEW WATER MAIN OR SEWER CONSTRUCTION. THE COST TO REMOVE PORTIONS OF WATER MAINS AND PLUG ENDS AND TO REMOVE SERVICES AND APPURTENANCES SHALL BE INCLUDED IN THE PRICE BID FOR EXCAVATION.

22. DISINFECTION/SAMPLING POINT LOCATIONS DEPICTED ON THE PLANS REPRESENT AN APPROXIMATE LOCATION. DURING CONSTRUCTION DISINFECTION/SAMPLING POINT SHALL BE AS CLOSE TO THE FINAL CONNECTION POINT AS POSSIBLE TO MINIMIZE THE AMOUNT OF PIPE AND FITTING REQUIRING SWAB DISINFECTION. SUBSEQUENT TO APPROVAL FROM THE COUNTY HEALTH DEPARTMENT, CONTRACTOR MAY VARY THE LOCATION OF THE REQUIRED SAMPLING POINTS. CONTRACTOR WILL BE RESPONSIBLE FOR OBTAINING APPROVAL FOR SUCH VARIATIONS AS WELL AS SCHEDULING SAMPLING(S) WITH THE MONROE COUNTY HEALTH DEPARTMENT.

23. ALL HYDRANTS SHALL BE LOCATED A MINIMUM OF 5 FEET FROM FACE OF CURB AND 18 INCHES FROM EDGE OF SIDEWALK TO EDGE OF HYDRANT.

ROCHESTER WATER BUREAU NOTES:

1. NEW CURB BOXES SHALL BE FURNISHED BY THE WATER BUREAU MATERIALS AND EQUIPMENT OFFICE LOCATED AT 10 FELIX STREET. THE CONTRACTOR SHALL CONTACT MICHAEL EKIERT AT 428-7057 TO MAKE ARRANGEMENTS TO PICK UP THE NEW BOXES.

2. THE WATER BUREAU MAINTAINS A 24" CAST IRON WATER MAIN (CONDUIT #1) AT EAST HENRIETTA ROAD AND A 42" STEEL WATER MAIN AT SOUTH CLINTON AVENUE. EXTREME CARE MUST BE TAKE TO PREVENT ANY DAMAGE TO THESE WATER MAINS DURING THE STREET IMPROVEMENT PROJECT. THE CONTRACTOR SHALL NOTIFY THE WATER BUREAU WHEN WORKING IN THE VICINITY OF THESE WATER MAINS.

MCWA STANDARD WATER MAIN NOTES FOR HIGHWAY PROJECTS:

1. INSTALL NEW WATER MAIN WITH A MINIMUM OF 5 FT OF COVER FROM FINAL PROJECT GRADES. EXISTING WATER MAINS MUST HAVE NO LESS THAN 4 FT OF COVER AND NO MORE THAN 6 FT OF COVER AFTER ANY PROJECT GRADE CHANGES.

2. A WATER PRESSURE TEST IS REQUIRED UPON COMPLETION OF THE INSTALLATION AND BACKFILL OF THE WATER MAIN. UNLESS OTHERWISE NOTED, THE MCWA REQUIRES A MINIMUM HYDROSTATIC PRESSURE OF 150 PSI (200 PSI IN SOME AREAS). NO PRESSURE DROP IS ALLOWED. THE PRESSURE TEST MUST BE MAINTAINED FOR A PERIOD OF ONE HOUR WITHOUT ADDITIONAL PUMPING OR ADDITION OF WATER.

3. THE WATER MAIN SHALL NOT BE PLACED INTO SERVICE UNTIL SO AUTHORIZED IN WRITING BY THE MONROE COUNTY HEALTH DEPARTMENT AND MCWA.

4. WATER MAINS AND APPURTENANCES TO BE CONSTRUCTED IN ACCORDANCE WITH THE REGULATIONS AND SPECIFICATIONS OF THE MCWA.

5. WATER MAIN(S) SHALL BE 6 INCH AND 8 INCH DUCTILE IRON CEMENT-LINED CLASS 51.

6. WATER SERVICE(S) SHALL BE MINIMUM 1 INCH TYPE K COPPER FROM THE WATER MAIN TO THE CURB BOX.

7. ALL GATE VALVES SHALL HAVE STAINLESS STEEL BODY AND BONNET BOLTS.

8. ALL NEW WATER MAINS SHALL INCLUDE POLYETHYLENE ENCASEMENT.

9. MINIMUM VERTICAL SEPARATION BETWEEN WATER MAINS AND SEWER MAINS SHALL BE 18 INCH MEASURED FROM THE OUTSIDE OF THE PIPE AT THE POINT OF CROSSING. MINIMUM HORIZONTAL SEPARATION BETWEEN WATER MAINS AND SEWER MAINS SHALL BE 10 FT MEASURED FROM THE OUTSIDE OF THE PIPES. ONE FULL LENGTH OF WATER MAIN SHALL BE CENTERED UNDER OR OVER THE SEWER SO THAT BOTH JOINTS WILL BE AS FAR FROM THE SEWER AS POSSIBLE. WHERE A WATER MAIN CROSSES UNDER A SEWER, ADEQUATE STRUCTURAL SUPPORT (COMPACTED SELECT GRANULAR FILL) SHALL BE PROVIDED FOR THE SEWERS TO PREVENT EXCESSIVE DEFLECTION OF JOINTS AND SETTLING ON AND BREAKING THE WATER MAINS.

10. ALL MECHANICAL JOINTS SHALL BE MADE USING RETAINER GLANDS AND ALL FITTINGS (TEES, BENDS, PLUGS, ETC.) SHALL BE BACKED WITH ADEQUATELY SIZED 2500 PSI CONCRETE THRUST BLOCKS CONTAINING NO FLY ASH OR POZZOLANS. CONCRETE FOR THRUST BLOCKS MUST BE TRANSIT MIX.

11. THE CONTRACTOR SHALL NOTIFY THE MCWA ENGINEER, DAVID SPRAGUE, 585-442-2001, EXTENSION 248, A MINIMUM OF THREE WORK DAYS PRIOR TO STARTING ANY WATER MAIN WORK.

12. THE CONTRACTOR IS RESPONSIBLE TO SCHEDULE ALL WATER MAIN TAPS WITH MCWA, IN WRITING, A MINIMUM OF THREE WORK DAYS IN ADVANCE (TAPS ARE SCHEDULED ON A "FIRST-COME-FIRST-SERVED" BASIS). MCWA MAKES ALL 4 INCH THROUGH 20 INCH TAPS AT THE CONTRACTOR'S EXPENSE ($400.00 PER TAP TO BE PAID IN ADVANCE). IN ADDITION, THE CONTRACTOR IS REQUIRED TO PROVIDE SAFE EXCAVATION (INCLUDING ACCESS) AND SUPPLY AND INSTALL THE TAPPING SLEEVE AND VALVE SUCH THAT IT WILL PASS AN AIR TEST ADMINISTERED BY MCWA PRIOR TO MAKING THE TAP. THE CONTRACTOR MUST ALSO HAVE SUFFICIENT EQUIPMENT AND MANPOWER TO ASSIST THE MCWA PERSONNEL IN THE PLACEMENT AND REMOVAL OF THE TAPPING MACHINE.

13. IF ANY CONTACT IS MADE WITH ANY MCWA FACILITIES OR IF ANY PROBLEMS OCCUR DURING CONSTRUCTION WITH EXISTING WATER MAINS OR APPURTENANCES, NOTIFY THE MCWA DISPATCH OFFICE AT 585-442-2009.

14. THE CONTRACTOR SHALL USE CAUTION WHEN WORKING (INCLUDING THE USE OF COMPACTION EQUIPMENT) IN THE VICINITY OF EXISTING WATER MAINS. ANY DAMAGE TO MCWA FACILITIES WILL BE REPAIRED AT THE CONTRACTOR'S EXPENSE.

15. ALL WATER SYSTEM VALVES AND CURB BOXES SHALL BE ADJUSTED TO GRADE AND MAINTAINED ACCESSIBLE THROUGHOUT THE PROJECT.

16. THE CONTRACTOR IS RESPONSIBLE TO SCHEDULE AND COORDINATE ALL REQUIRED WATER SYSTEM SHUT-OFFS, INCLUDING A MINIMUM 24 HOUR ADVANCE WRITTEN NOTICE TO ALL AFFECTED CUSTOMERS AND A MINIMUM OF 3 WORK DAYS ADVANCE WRITTEN NOTICE TO MCWA (DAVID SPRAGUE AT FAX 585-442-0220). WATER SYSTEM SHUT-OFF NOTIFICATIONS SHALL INCLUDE THE FOLLOWING INFORMATION (LOCATION, DATE, TIME OF SHUT-OFF, DURATION, ANTICIPATED TIME OF TURN-ON AND NUMBER OF AFFECTED CUSTOMERS). ALL EXISTING WATER SYSTEM VALVES AND APPURTENANCES ARE TO BE OPERATED BY MCWA PERSONNEL ONLY. NO WATER SYSTEM SHUT-OFFS WILL BE ALLOWED ON MCWA HOLIDAYS.

MCWA STANDARD WATER MAIN NOTES FOR HIGHWAY PROJECTS (CONTINUED):

17. THE CONTRACTOR IS RESPONSIBLE TO SCHEDULE ALL REQUIRED WATERING UP, FLUSHING AND TESTING OF THE NEW WATER MAIN VIA WRITTEN NOTICE TO MCWA (DAVID SPRAGUE AT FAX 585-442-0220) A MINIMUM OF 3 WORK DAYS IN ADVANCE. ALL EXISTING WATER SYSTEM VALVES AND APPURTENANCES ARE TO BE OPERATED BY MCWA PERSONNEL ONLY.

18. ALL HYDRANTS SHALL BE LOCATED A MINIMUM OF 5 FEET FROM FACE OF CURB AND 18 INCHES FROM EDGE OF SIDEWALK TO EDGE OF HYDRANT.

19. WHEN INSTALLING FIRE HYDRANTS, IF GROUNDWATER IS ENCOUNTERED WITHIN 7 FEET OF THE FINISHED GRADE, FIRE HYDRANT WEEP HOLES (DRAINS) SHALL BE PLUGGED.

20. DURING CONSTRUCTION, ALL OPEN PIPE ENDS SHALL BE COVERED IN A WATER-TIGHT MANNER USING TEMPORARY CAPS, PLUGS OR DOUBLE-LAYERED PLASTIC SHEETING.

21. THE EXCAVATION WATER LEVEL SHALL BE KEPT A MINIMUM OF 12 INCHES BELOW THE WATER MAIN INVERT DURING INSTALLATION.

22. ALL VALVES ON ABANDONED SECTIONS OF WATER MAIN SHALL BE LEFT IN THE CLOSED POSITION AND THE VALVE BOX SHALL BE REMOVED. ALL ABANDONED HYDRANTS SHALL BE REMOVED AND DELIVERED TO THE MCWA.

23. THE USE OF RECYCLED CONCRETE IS NOT ALLOWED UNLESS IT HAS BEEN CONFIRMED THAT THE RECYCLED CONCRETE MATERIAL CONTAINS NO FLY-ASH OR POZZOLANS. SUFFICIENT TESTS SHALL BE PERFORMED BY A CERTIFIED TESTING LABORATORY (AT THE CONTRACTOR'S EXPENSE) TO DETERMINE THAT EACH SOURCE OF RECYCLED CONCRETE CONTAINS NO FLY-ASH OR POZZOLANS.

24. A "TEMPORARY HYDRANT USE WITH METER AND BACKFLOW PREVENTION DEVICE" PERMIT IS REQUIRED PRIOR TO THE CONTRACTOR USING ANY HYDRANT AS A SOURCE OF WATER FOR ANY PURPOSE. THE CONTRACTOR IS RESPONSIBLE FOR ALL COSTS ASSOCIATED WITH THIS PERMIT. CONTACT MCWA FOR DETAILS OF THIS PERMIT.

25. AFTER TESTING, DISINFECTION AND HEALTH SAMPLING, SCHEDULE SHUTDOWN WITH MCWA, REMOVE TEMPORARY PLUG AND BLOW-OFF ASSEMBLY AND CONNECT NEW WATER MAIN TO EXISTING WATER MAIN USING ALL NECESSARY PIPE AND FITTINGS. SWAB DISINFECT ALL PIPE AND FITTINGS. CONTRACTOR MAY BE REQUIRED TO USE PUSH-ON JOINT RESTRAINT (SUCH AS "FIELD LOK" GASKETS) FOR A MINIMUM OF THREE (3) PIPE JOINTS PRECEDING THE TEMPORARY PLUG AND BLOW-OFF ASSEMBLY.

ROCHESTER PURE WATERS DISTRICT (RPWD) NOTES:

1. CONTRACTOR IS TO CONSTRUCT ALL SEWER APPURTENANCES (MAIN SEWER, LATERALS, CATCH BASINS AND MANHOLES) IN CONFORMANCE WITH THE SPECIFICATIONS OF THE ROCHESTER PURE WATERS DISTRICT.

2. CONTRACTOR IS TO TAKE APPROPRIATE MEASURES TO PREVENT DIRT, DEBRIS AND CONSTRUCTION MATERIALS FROM ENTERING SEWER APPURTENANCES (SEWER MAIN, LATERAL, CATCH BASINS AND MANHOLES) DURING CONSTRUCTION OF PROJECT.

3. RPWD WILL LOCATE AND MARK EXISTING LATERALS AT THE REQUEST OF THE CONTRACTOR. THE RPWD IS ONLY ABLE TO MARK THE WYE LOCATION AT THE MAIN SEWER, AND CANNOT VERIFY THE LOCATION OF THE LATERAL BACK TO THE R.O.W. CONTRACTOR MAY REQUEST A LATERAL STAKEOUT BY CONTACTING MCPW MAPS AND RECORDS ROOM AT 1 585-753-7367.

4. RPWD IS TO BE NOTIFIED IMMEDIATELY IN THE EVENT OF ANY DAMAGE TO SEWER APPURTENANCES BY CALLING 1-585-753-7351. ALL REPAIRS ARE TO BE PERFORMED IN THE PRESENCE OF A REPRESENTATIVE OF RPWD, AND ARE TO BE MADE AS PER RPWD SPECIFICATIONS.

5. IN THE EVENT THAT EXISTING SEWER MAINS OR LATERAL PIPES ARE BROKEN DURING EXCAVATION, ANY AND ALL REPAIRS MUST BE EXTENDED LINEARLY. INTRODUCING NEW BENDS IN PIPE WILL NOT BE PERMITTED. ALL 5 INCH INSIDE DIAMETER LATERAL PIPE MUST BE REPAIRED USING 5 INCH SERVICE WEIGHT CAST IRON PIPE AND TWO FERNCOS. CONTRACTOR MAY BE PERMITTED TO USE OAKUM AND EPOXY MORTAR TO CONNECT NEW PVC PIPE TO AND EXISTING BELL THAT IS IN GOOD CONDITION.

6. STONE BEDDING MATERIAL USED FOR SEWER MAIN AND LATERAL PIPE REPAIRS IS TO BE CLASS B CONSISTING OF #1 AND #2 WASHED STONE AT A MINIMUM OF 6 INCH DEPTH.

7. CONTRACTOR IS TO ADD/REMOVE ADDITIONAL COURSES OF BRICK/BLOCK AS/IF REQUIRED TO RETROFIT NEW MANHOLE FRAMES AND COVERS ONTO EXISTING MANHOLE STRUCTURES AT THE REQUIRED FINISHED GRADE.

8. WHERE AND EXISTING CATCH BASIN IS TO BE REMOVED, ALL PORTIONS OF THE CATCH BASIN WALLS AND FOUNDATION ARE TO BE REMOVED AND THE EXISTING LATERAL ABANDONED AS PER RPWD SPECIFICATIONS.

9. ALL REMOVED SEWER MANHOLE FRAMES AND COVERS AND CATCH BASIN GRATES, ACCESS COVERS, AND CAPSTONES ARE THE PROPERTY OF THE ROCHESTER PURE WATERS DISTRICT AND SHALL BE MADE AVAILABLE FOR PICK-UP.

10. SEWER CONNECTION PERMITS FOR THE NEW RECEIVING BASINS TO BE DEDICATED TO THE RPWD WILL NOT BE ISSUED UNTIL SHOP DRAWINGS/CERTIFICATION LETTERS/TEST REPORTS FOR ALL MATERIALS TO BE USED FOR THE RECEIVING BASINS HAVE BEEN APPROVED BY THE RPWD. THE DOCUMENTS MUST BE APPROVED BY THE CONTRACTOR AND DESIGN ENGINEER PRIOR TO RPWD REVIEW AND APPROVAL.

11. AS-BUILT DRAWINGS SHALL BE FURNISHED TO THE RPWD. THE AS-BUILT PLANS SHALL INDICATE THE EXACT LOCATION OF ALL SEWERS, MANHOLES, WYE BRANCHES, LATERALS, AND CATCH BASINS AS WELL AS LENGTHS AND SLOPES OF PIPES. ELEVATIONS OF ALL SEWER MANHOLE RIMS AND INVERTS AND LATERAL DEPTHS AT PROPERTY LINES OR RPWD EASEMENT LINES SHALL ALSO BE SHOWN.

"I hereby certify by my signature and seal below, that I have prepared this record drawing which is, to the best of my knowledge and in my professional opinion, a true representation of the work as constructed on the Westfall Road Improvements Phase III, Project No. 1409."

STATE OF NEW YORK · MATTHEW J. SCHOLLER · LICENSED PROFESSIONAL ENGINEER · NO. 069983

NO.	DATE	BY:	REVISION
			NO AS-BUILT REVISIONS

Barton & Loguidice, P.C.

DRAFTED BY: JMW/JJB
DESGIN BY: JMW

DEPARTMENT OF TRANSPORTATION
50 WEST MAIN STREET, SUITE 6100
ROCHESTER, NEW YORK 14614-1231

UNAUTHORIZED ALTERATION OR ADDITION TO THIS DRAWING IS A VIOLATION OF THE NEW YORK STATE EDUCATION LAW ARTICLE 145, SECTION 7209

PROJECT NAME: WESTFALL ROAD
LIMITS: E. HENRIETTA ROAD TO LAC-DE-VILLE BLVD
TOWN: BRIGHTON
CITY: ROCHESTER
CAPITAL PROJECT NO.: 4753.77
BRIDGE IDENTIFICATION NO.: N.A.

GENERAL NOTES

SCALE: NOT TO SCALE
DATE ISSUED: 4/25/2014
DRAWING NO. GN-2
SHEET NO. 14 OF 112

FILE NAME = I:\Shared\1000\1066005\AS-BUILTS\1066005_gn_02.dgn
DATE = 4/25/2014
TIME = 9:51:14 AM

mek
I:\MicroStation\Workspace\PLOT\NYSDOT\NYSDOT_SIZE_B.TBL
I:\MicroStation\Workspace\Plot\NYSDOT\NYSDOT_HPLJ5200_B.plt

DRAINAGE NOTES:

1. WHEN UNSUITABLE MATERIAL IS PRESENT IN THE BASIN AS DETERMINED BY THE ENGINEER, IT SHALL BE REMOVED PRIOR TO PAYMENT. IF NO HOLE EXISTS IN THE BOTTOM OF THE BASIN, A 2 INCH HOLE SHALL BE DRILLED. THIS WORK WILL BE PAID FOR UNDER VARIOUS DRAINAGE ITEMS.

2. WHERE BASINS ARE TO BE "REMOVED", THE LIMITS OF ITEM 206.02 SHALL EXTEND TO THE BOTTOM OF THE BASIN AND 2 FEET BEYOND THE WALLS. WHEN REMOVAL IS SHOWN DUE TO CONFLICT WITH NEW DRAINAGE STRUCTURE, IT NEED ONLY BE REMOVED TO THE DEPTH OF THE STRUCTURE, THE REMAINDER WILL BE PAID ONLY ONCE FOR THE EXISTING OR PROPOSED STRUCTURE, WHICHEVER IS GREATER, EXCAVATION OR BACKFILL.

3. DRILL AND GROUT #16 BAR DOWELS, 3 PER SIDE MINIMUM, WITH 6 INCH MINIMUM EMBEDMENT INTO OLD AND NEW CONCRETE. ALL EXISTING CONCRETE SURFACES THAT WILL BE IN CONTACT WITH NEW CONCRETE SHALL BE COATED WITH EPOXY POLYSULFIDE GROUT PER NYSDOT STANDARD SPECIFICATIONS SECTION 721-03. LATEST REVISION. THE COST OF THIS WORK SHALL BE INCLUDED IN THE PRICE BID FOR ITEM 604.0704XX.

4. REPLACE PAVEMENT IN KIND WITH WHAT IS EXISTING, UNLESS CONDITIONS EXIST WHERE THAT IS NOT FEASIBLE, THEN INSTALL SECTION AS APPROVED BY THE RESIDENT ENGINEER. THE MINIMUM APPROVABLE SECTION SHALL BE 12 INCH OF ITEM 304.12-TYPE 2 SUBBASE, 6 INCH OF ITEM 402.377902, 2 INCH OF ITEM 402.197902, AND 1½ INCH OF ITEM 402.097302.
5. SIX (6) INCHES OF STONE BEDDING, CONSISTING OF A BLENDING OF #1 AND #2 STONE, IS REQUIRED FOR SANITARY AND STORM SEWER INSTALLATIONS WITH CRUSHED STONE HAUNCHING TO A MINIMUM OF ONE-HALF OF THE PIPE DIAMETER ON THE SIDE OF THE PIPE. PAYMENT TO BE INCLUDED UNDER VARIOUS PIPE ITEMS.

6. ALL SAW CUTS OF EXISTING PAVEMENT ARE TO BE TACK COATED AND TOP SEAM TO BE CAPPED WITH BITUMINOUS SEALER BEFORE RESURFACING TO BEGIN.

7. IN LOCATIONS WHERE NEW DRAINAGE STRUCTURES ARE BEING INSTALLED WHERE THERE IS AN ABANDONED WATER MAIN, THE WATER MAIN SHALL BE SAW CUT AT THE EXCAVATION AND REMOVED. THE PIPE ENDS SHALL BE PLUGGED WITH CONCRETE. PAYMENT TO BE INCLUDED IN UNDER THE VARIOUS DRAINAGE ITEMS.

TRAFFIC SIGNAL NOTES:

1. THE CONTRACTOR SHALL INSTALL ALL IN-LINE FUSE KIT IN THE SERVICE CABLE IN THE PULLBOX CLOSEST TO THE CABINET. THE KIT SHALL BE APPROVED BY MCDOT AND PAID FOR UNDER ITEM 680.95020615.

2. THE CONTRACTOR, UNDER ITEM 680.700606, SHALL COORDINATE POWER SOURCE WITH ROCHESTER GAS AND ELECTRIC PRIOR TO INSTALLATION.

3. RG&E WILL REQUIRE A CONNECTION CHARGE FOR EACH TRAFFIC SIGNAL CONNECTION. THE COST FOR THIS CHARGE SHALL BE COVERED UNDER VARIOUS TRAFFIC SIGNAL ITEMS.

4. CONTACT MCDOT (AL JENSEN 753-7749) AT LEAST ONE WEEK PRIOR TO STARTING WORK.

5. CONTRACTOR TO ARRANGE FOR CABINET PICK-UP AT MCDOT AND PAYMENT PRIOR TO INSTALLATION.

6. CHECK FOR MATERIAL COST OF CONTROLLER AND CABINET TO BE MADE OUT TO: COUNTY OF MONROE, DIRECTOR OF FINANCE, REFERENCE: WESTFALL ROAD TRAFFIC SIGNAL SYSTEM ITEM 680.809908MO $5,489.00 EACH.

7. ALL TRAFFIC SIGNAL POLES NEED TO BE ADA-HANDICAP ACCESSIBLE FOR ACCESS TO PEDESTRIAN PUSH BUTTONS.

8. DETAILS SHOWN ARE TYPICAL ONLY AND NOT INTENDED TO INDICATE THE PRODUCTS OF ANY SPECIFIC MANUFACTURER.

9. SIGNAL HEAD ARRANGEMENTS ARE SHOWN FOR EXAMPLE ONLY. NUMBER OF DIRECTIONS THE HEAD FACES, NUMBER OF SECTIONS, SIZE OF FACES, SIGNAL INDICATIONS AND ARRANGEMENT OF FACES WILL BE SPECIFIED ON THE PLANS.

10. ELBOWS, PIPE CROSSES, WIRE OUTLET AND OTHER FITTINGS SHALL BE EQUIPPED WITH SET SCREWS.

11. UNUSED HOLES SHALL BE CAPPED.

12. SIGNAL HEADS SHALL BE ASSEMBLED TO BALANCE AND HANG VERTICALLY.

13. THREADS ON FITTINGS ARE NATIONAL PIPE STRAIGHT THREADS.

14. STANDARD OPEN VISORS SHALL BE INSTALLED UNLESS SPECIFIED OTHERWISE ON THE PLANS.

15. THE CONTRACTOR IS CAUTIONED THAT THE LOCATION OF UTILITIES SHOWN ON THE CONTRACT PLANS ARE NOT GUARANTEED, NOR IS THERE ANY GUARANTEE THAT ALL SUCH UTILITY LINES WITHIN THE CONTRACT LIMITS HAVE BEEN SHOWN ON THE PLANS. IT WILL BE THE CONTRACTORS RESPONSIBILITY TO SATISFY THEMSELF AS TO THE EXACT LOCATION, AND AT THEIR OWN EXPENSE, TO PROTECT AND SUPPORT ALL UTILITIES ENCOUNTERED IN THE CONTRACTOR'S EXCAVATING AND TRENCHING OPERATIONS.

16. THE CONTRACTOR SHALL BE RESPONSIBLE FOR ANY DAMAGE TO THESE UTILITY LINES CAUSED BY THE CONTRACTOR'S OPERATIONS AND IF NATURE OF THE DAMAGE IS SUCH AS TO ENDANGER THE SATISFACTORY OPERATIONS OF THESE UTILITIES AND NECESSARY REPAIRS ARE NOT IMMEDIATELY MADE BY THE CONTRACTOR, THE WORK MAY BE PERFORMED BY THE RESPECTIVE OWNING COMPANIES AND THE COST THEREOF CHARGED TO THE CONTRACTOR.

17. THE CONTRACTOR SHALL MAKE AVAILABLE FOR PICK-UP OLD TRAFFIC CONTROLLER CABINETS AND SIGNAL HEADS BY MCDOT.

18. ALL SIGNAL HEADS TO BE YELLOW IN COLOR.

PROJECT SPECIFIC NOTES:

1. THE CONTRACTOR SHALL NOTIFY THE MONROE COUNTY DEPARTMENT OF TRANSPORTATION DIRECTOR A MINIMUM OF 21 DAYS IN ADVANCE OF ANY BRIDGE AND/OR ROADWAY CLOSING AND/OR DETOURS.

2. PROPOSED SIDEWALK SHOWN ON THE PLAN SHEETS SHALL BE INSTALLED AS PART OF THIS CONTRACT UNLESS SPECIFIED OTHERWISE. ADDITIONAL SIDEWALK MAY ALSO BE REPLACED BY THE CONTRACTOR AS ORDERED BY THE ENGINEER. THE CONTRACTOR WILL BE PAID FOR ANY EXTRA SIDEWALK INSTALLATION BASED ON THE PRICE BID FOR ITEMS 203.02, 304.12, AND S608.12.

WORK ZONE TRAFFIC CONTROL NOTES:

GENERAL NOTES

1. PRIOR TO THE START OF ANY WORK OPERATIONS, ALL RELATED WORK FOR PROPOSED WORK ZONE TRAFFIC CONTROL, AOBE, SHALL BE COMPLETE. THIS INCLUDES BUT IS NOT LIMITED TO, ALL SIGNS, SIGNALS, PAVEMENT MARKINGS, BARRIERS, DELINEATION (CONES, DRUMS, ETC.), FLAGGERS, PAVEMENT MODIFICATIONS, AND ANY OTHER RELATED WORK.

2. THE TRAFFIC CONTROL PLANS SHOWN ARE CONSIDERED MINIMUM REQUIREMENTS. ADDITIONAL SIGNS AND/OR TRAFFIC CONTROL DEVICES MAY BE REQUIRED AS DETERMINED BY THE ENGINEER, COST TO BE INCLUDED IN THE PRICE BID FOR THE APPROPRIATE ITEMS. IF AT ANY TIME THE ENGINEER DETERMINES THAT TRAFFIC IS NOT BEING PROPERLY MAINTAINED WITHIN A WORK ZONE, THE CONTRACTOR SHALL IMMEDIATELY CORRECT THE INDICATED DEFICIENCY, AOBE.

3. WEEDS, SHRUBBERY, CONSTRUCTION MATERIALS, EQUIPMENT, VEHICLES OR WORKERS SHALL NOT OBSCURE TRAFFIC CONTROL DEVICES OR OBSTRUCT TRAFFIC. THE CONTRACTOR SHALL BE REQUIRED TO TRIM ANY FOLIAGE OBSTRUCTING THE VISIBILITY OF ANY TRAFFIC CONTROL DEVICES WHETHER PERMANENT, TEMPORARY OR CONSTRUCTION, AOBE. THE COST SHALL BE INCLUDED IN THE PRICE BID FOR BASIC WORK ZONE TRAFFIC CONTROL.

4. THE CONTRACTOR MUST SUBMIT TO THE ENGINEER, IN WRITING, PROPOSED REVISIONS TO THE TRAFFIC CONTROL PLAN FOR REVIEW AND APPROVAL BY THE REGIONAL TRAFFIC ENGINEER OR DESIGNEE FIVE (5) WORKING DAYS PRIOR TO THE PLANNED IMPLEMENTATION OF SUCH PROPOSED REVISIONS, EXCEPT FOR CHANGES THAT ALTER THE BASIC CONCEPT OF THE TRAFFIC CONTROL PLAN. SUCH CONCEPTUAL CHANGES MUST BE SUBMITTED TO THE ENGINEER FOR APPROVAL BY THE REGIONAL OPERATIONS ENGINEER OR DESIGNEE THIRTY (30) WORKING DAYS PRIOR TO THE IMPLEMENTATION OF SUCH REVISIONS.

5. THE CONTRACTOR SHALL BE RESPONSIBLE TO MAINTAIN THE CONSTRUCTION SITE IN A SAFE AND ORDERLY FASHION THROUGHOUT THE PERIOD OF CONSTRUCTION WITH MINIMAL DISRUPTION OF THROUGH TRAFFIC AND INGRESS AND EGRESS FOR ALL PRIVATE DRIVEWAYS, PUBLIC STREETS, AND ENTRANCES TO BUSINESSES ALONG THE ROUTE OF CONSTRUCTION.

6. WHEN MAINTAINING TRAFFIC ON GRAVEL SUBBASE, THE CONTRACTOR SHALL TAKE SPECIAL CARE TO PROVIDE ADEQUATE RAMPS OFF AND ONTO PAVED AREAS IN ADDITION TO MARKING ALL HAZARDS PROJECTING UP FROM THE DRIVING SURFACE (I.E. VALVES, MAHOLES, ETC.). "BUMP" (W1-1) AND "PAVEMENT ENDS" (W4-30) SIGNS SHALL BE INSTALLED WHERE NECESSARY, AOBE. THE CONTRACTOR SHALL PROVIDE STONE RAMPS (OR SUITABLE, ADBE) FOR ALL VALVES, MANHOLES, ETC. LOCATED WITHIN THE TRAVEL LANE WHEN TRAFFIC IS BEING MAINTAINED ON SUBBASE. FOR VALVES, MANHOLES, ETC. LOCATED OUTSIDE THE ACTUAL TRAVEL LANES (I.E. SHOULDERS, CENTERLINE) THE CONTRACTOR MAY MARK THE FEATURE AS A HAZARD WITH A DRUM IF RAMPING IS NOT POSSIBLE. ALL VALVES, MANHOLES, ETC. LOCATED WITHIN IN INTERSECTION SHALL BE RAMPED. THESE RAMPS SHALL BE ELIMINATED BY SUBSEQUENT WORK OPERATIONS. THE COST BID FOR THIS WORK SHALL BE INCLUDED IN THE PRICE BID FOR WORK ZONE TRAFFIC CONTROL.

7. THE SUBBASE COURSE SHALL BE RE-GRADED AS NECESSARY TO PROVIDE A SMOOTH RIDING SURFACE FOR MOTOROISTS, AOBE. PAYMENT FOR RE-GRADING THE SUBBASE AND DUST CONTROL SHALL BE INCLUDED IN THE PRICE BID FOR WORK ZONE TRAFFIC CONTROL.

SURFACE CONDITION

1. TEMPORARY RAMPS REQUIRED PER SECTION 619 SHALL BE CONSTRUCTED FROM BITUMINOUS PATCHING MATERIAL (PLANT MIX OR SUITABLE WINTER MIX). THESE RAMPS SHALL BE MAINTAINED AND REMAIN IN PLACE UNTIL THE NEED FOR RAMPING IS ELIMINATED BY SUBSEQUENT WORK OPERATIONS. THE COST BID FOR THIS WORK SHALL BE INCLUDED IN THE PRICE BID FOR BASIC WORK ZONE TRAFFIC CONTROL.

2. A W8-1 (36X36) "BUMP" SIGN SHALL BE PLACED ON ALL APPROACHES WHERE A BUMP IS PRESENT IN THE ROADWAY. WHERE NUMEROUS BUMPS OR DIPS OCCUR, THE W8-1 "BUMP" SIGN SHALL BE REPLACED WITH A W8-8 (36X36) "ROUGH ROAD" SIGN.

3. WHEN MAINTAINING TRAFFIC ON PAVED OR MILLED SURFACES, THE CONTRACTOR SHALL MARK ALL HAZARDS PROJECTING UP FROM THE DRIVING SURFACE (I.E. VALVES, MANHOLES, ETC.). THE CONTRACTOR SHALL PROVIDE TEMPORARY RAMPS FOR ALL VALVES, MANHOLES, ETC. LOCATED WITHIN THE TRAVEL LANES. THE CONTRACTOR IS RESPONSIBLE FOR PLACEMENT AND REMOVAL OF THESE RAMPS. TEMPORARY RAMPS SHALL BE CONSTRUCTED FROM BITUMINOUS PATCHING MATERIAL (PLANT MIX OR SUITABLE WINTER MIX). FOR VALVES, MANHOLES, ETC. LOCATED OUTSIDE THE ACTUAL TRAVEL LANES (I.E. SHOULDERS, CENTERLINE) THE CONTRACTOR MAY MARK THE FEATURE AS A HAZARD WITH A DRUM, IF RAMPING IS NOT POSSIBLE. ALL VALVES, MANHOLES, ETC. LOCATED WITHIN AN INTERSECTION SHALL BE RAMPED. THESE RAMPS SHALL BE MAINTAINED AND REMAIN IN PLACE UNTIL THE NEED FOR RAMPING IS ELIMINATED BY SUBSEQUENT WORK OPERATIONS. THE COST BID FOR THIS WORK, INCLUDING REMOVAL OF RAMPS, SHALL BE INCLUDED IN THE PRICE BID FOR BASIC WORK ZONE TRAFFIC CONTROL.

4. TEMPORARY PAVEMENT WILL BE REQUIRED OVER EXCAVATION THAT ARE EXPECTED TO CARRY TRAFFIC FOR A PERIOD OF TIME GREATER THAN 48 HOURS PRIOR TO PERMANENT RESTORATION. TEMPORARY PAVEMENT SHALL CONSIST OF 3 INCH THICK ASPHALT HOT MIX MATERIAL APPROVED BY THE RESIDENT ENGINEER (OR 4 INCH THICK CLASS F CONCRETE DURING THE WINTER). THE COST OF FURNISHING, INSTALLING, AND MAINTAINING TEMPORARY PAVEMENT SHALL BE INCLUDED IN THE UNIT PRICE BID FOR ITEM 619.400200MO.

CONSTRUCTION VEHICLES AND EQUIPMENT

1. VEHICLES OR EQUIPMENT BELONGING TO THE CONTRACTOR OR THE CONTRACTOR'S EMPLOYEES SHALL NOT BE PARKED WITHIN THE CLEAR ZONE, ON THE PAVEMENT OR SHOULDERS ALONG THE ROADWAY WHERE PARKING IS NOT NORMALLY PERMITTED, OR ANY OTHER AREAS DEEMED HAZARDOUS BY THE ENGINEER. VEHICLES BELONGING TO THE CONTRACTOR OR THE CONTRACTOR'S EMPLOYEES SHALL NOT BE PARKED IN A MANNER WHICH OBSTRUCTS SIGNS, BARRIERS, BARRICADES, OR OTHER TRAFFIC CONTROL DEVICES. VEHICLES BELONGING TO THE CONTRACTOR OR THE CONTRACTOR'S EMPLOYEES SHALL NOT BE PARKED IN A MANNER WHICH INTERFERES WITH ACCESS TO ABUTTING PROPERTIES. VEHICLES PARKED BEHIND GUIDE RAIL/ BARRIER SHALL BE PARKED BEYOND THE GUIDE RAIL/ BARRIER DEFLECTION DISTANCE.

2. THE CONTRACTOR SHALL PLAN AND INCORPORATE ACCESS POINTS INTO THE WORK ZONE SUCH THAT, TO THE EXTENT PRACTICAL, THE CONTRACTOR'S VEHICLES ENTERING AND LEAVING THE WORK ZONE SHALL NOT IMPEDE THE MOVEMENT OF THROUGH TRAFFIC IN THE ADJACENT OPEN LANES.

BARRIER/SHADOW VEHICLES

1. A SHADOW VEHICLE IS REQUIRED FOR SETTING UP OF TEMPORARY TRAFFIC CONTROL SIGNS AND DEVICES WHERE WORKERS ARE IN A LANE OR SHOULDER EXPOSED TO TRAFFIC. THE COST OF A SHADOW VEHICLE SHALL BE INCLUDED IN THE PRICE BID FOR BASIC WORK ZONE TRAFFIC CONTROL.

WORK ZONE TRAFFIC CONTROL NOTES (CONT'D):

CHANNELIZING DEVICES

1. THE CONTRACTOR SHALL NOT MIX CHANNELIZATION DEVICES IN A LINEAR CLOSURE OR TAPER; I.E. CONES, VERTICAL PANELS AND DRUMS SHALL NOT BE USED IN THE SAME TAPER OR CLOSURE. HOWEVER, DIFFERENT CHANNELIZATION DEVICES MAY BE USED IN DIFFERENT AREAS OF A PROJECT.

2. THE CONTRACTOR SHALL USE DRUMS FOR ANY LANE CLOSURES OR SHOULDER CLOSURES WHICH ARE TO REMAIN OVERNIGHT.

FLAGGING AND TRAFFIC CONTROL

1. THE USE OF TEMPORARY SIGNALS AS A SUBSTITUTE FOR FLAGGERS WILL NOT BE ALLOWED ON THIS PROJECT.

FLAGGING AND TRAFFIC CONTROL (CON'T)

2. FLAGGER SIGNS SHALL NOT BE USED FOR BRIEF PERIODS OF INCIDENTAL FLAGGING, AOBE. FLAGGER SIGNS SHALL NOT BE VISIBLE WHEN FLAGGERS ARE NOT BEING USED.

SIGNING

1. ALL SIGNS AND POSTS REMOVED SHALL BECOME THE PROPERTY OF THE MONROE COUNTY DEPARTMENT OF TRANSPORTATION AND SHALL BE MADE AVAILABLE FOR PICK-UP.

2. ALL EXISTING SIGNS WITHIN THE CONTRACT LIMITS TO REMAIN SHALL BE MAINTAINED BY THE CONTRACTOR. THE COST OF WHICH SHALL BE INCLUDED IN THE PRICE BID FOR ITEM 619.01-BASIC WORK ZONE TRAFFIC CONTROL.

3. ALL SIGN LOCATIONS SHOWN WILL BE CONSIDERED APPROXIMATE WITH THE EXACT LOCATION TO BE DETERMINED BY THE RESIDENT ENGINEER.

PAVEMENT MARKINGS

1. TECHNIQUES FOR REMOVAL OR COVERING OF PAVEMENT MARKINGS ARE SUBJECT TO APPROVAL BY THE ENGINEER.

2. MAINTENANCE OF TEMPORARY OR INTERIM MARKINGS SHALL INCLUDE REMARKING AREAS WHERE THE ENGINEER DETERMINES THE MARKINGS ARE NOT CLEAR, NO LONGER EFFECTIVE OR COULD POTENTIALLY MISGUIDE MOTORISTS. THIS SHALL INCLUDE REAPPLYING, IF REQUIRED, PRIOR TO AND JUST AFTER WINTER SHUT-DOWN PERIODS ISOLATED AREAS OUTSIDE OF PREVIOUSLY DISTURBED CONSTRUCTION ZONES, WHERE EXISTING PAVEMENT MARKINGS HAVE BEEN OBLITERATED BY THE CONTRACTOR'S OPERATIONS. THERE WILL BE NO ADDITIONAL PAYMENT FOR THIS WORK EXCEPT AS NOTED IN SECTION 619.

3. EXISTING PAVEMENT MARKINGS OUTSIDE OF PREVIOUSLY DISTURBED CONSTRUCTION ZONES SHALL BE MAINTAINED AND RE-STRIPED IF REQUIRED BY THE ENGINEER. THIS MAY INCLUDE, BUT NOT BE LIMITED TO RE-STRIPING THE EXISTING ROADWAY PRIOR TO OR DIRECTLY AFTER WINTER SHUTDOWN AND/OR RE-STRIPING AREAS THAT ARE NOT SCHEDULED FOR WORK UNTIL LATER PHASES OF CONSTRUCTION. EXISTING MARKINGS, LETTERS AND SYMBOLS WILL BE RE-APPLIED AS NECESSARY, AOBE. PAVEMENT MARKINGS THAT HAVE BEEN OBLITERATED BY THE OPERATION OF UTILITY COMPANIES SHALL BE MAINTAINED AS ORDERED BY THE ENGINEER. PAVEMENT MARKINGS APPLIED AS INDICATED IN THIS PARAGRAPH WILL BE PAID FOR UNDER THE APPROPRIATE 640 SERIES ITEM - REFLECTORIZED PAVEMENT MARKING PAINTS.

NOTIFICATIONS AND EMERGENCY ACCESS

1. THE CONTRACTOR IS REQUIRED TO CONTACT THE APPROPRIATE SCHOOL AND EMERGENCY SERVICES ORGANIZATIONS WITH RESPECT TO THE EFFECT OF ROAD WORK, TRAVEL LANE REDUCTIONS, AND DETOURS ON OPERATIONS. THIS CONTACT SHALL BE MADE AS CONDITIONS CHANGE AND AT LEAST TWO WEEKS PRIOR TO IMPLEMENTING EACH TRAFFIC PHASE AND/OR DETOUR TO ALLOW ADEQUATE TIME FOR THE ORGANIZATIONS TO COORDINATE AND MAKE NECESSARY ADJUSTMENTS TO RESPONSE SCHEDULES AND ROUTES. A LIST OF SCHOOLS AND EMERGENCY SERVICE ORGANIZATION WILL BE MADE AVAILABLE UPON REQUEST.

2. THE CONTRACTOR IS REQUIRED TO CONTACT THE APPROPRIATE TRANSIT OFFICIALS IN RESPECT TO THE EFFECT OF ROAD ALTERATIONS ON BUS OPERATIONS. THIS SHOULD BE DONE FOUR WEEKS IN ADVANCE OF ANY CHANGES IN TRAFFIC PATTERNS OR IMPLEMENTATION OF WORK ZONES SO THAT THERE WILL BE ADEQUATE TIME FOR TRANSIT OFFICIALS TO NOTIFY PERSONNEL OF THE EFFECTS TO SCHEDULES AND ROUTES. THE CONTRACTOR SHALL MAKE PROVISIONS FOR THE SAFE INGRESS AND EGRESS OF PASSENGERS AT EXISTING OR TEMPORARILY RELOCATED BUS STOPS. CONTACT CHARLES SWITZER, ROCHESTER GENESEE REGIONAL TRANSPORTATION AUTHORITY (RGRTA) 585-654-0276.

TREE NOTES:

1. THE CONTRACTOR SHALL PRESERVE AND PROTECT FROM DAMAGE ALL TREES WITHIN THE RIGHT-OF-WAY AS ORDERED BY THE RESIDENT ENGINEER.

2. NO TREES SHALL BE REMOVED OR TRIMMED WITHOUT THE APPROVAL & NOTIFICATION OF THE RESIDENT ENGINEER AND PROPERTY OWNER. NO TREE SHALL BE REMOVED OTHER THAN SHOWN ON THE PLAN AND WITHOUT WRITTEN AUTHORIZATION FROM THE PROPERTY OWNER IF OUTSIDE OF THE RIGHT-OF-WAY. TREE REMOVALS SHALL INCLUDE STUMP REMOVAL.

3. ALL TREES HAVING A [
FOR UNDER ITEM C201.

4. THE CLEARING, GRUBBI
FENCES, DEBRIS, AND
PAID UNDER ITEM C201

5. THE CONTRACTOR SHAL
SURFACES AND 10 FT
PAYMENT INCLUDED UN

6. THE PERIOD OF ESTABL
611 OF THE NYSDOT S
ESTABLISHMENT.

7. THE CONTRACTOR SHAL
PROJECT.

"I hereby certify by my signature and seal below, that I have prepared this record drawing which is, to the best of my knowledge and in my professional opinion, a true representation of the work as constructed on the Westfall Road Improvements Phase III, Project No. 1409."

STATE OF NEW YORK · MATTHEW J. SCHOFIELD · LICENSED · NO. 059983 · PROFESSIONAL ENGINEER

NO AS-BUILT REVISIONS

NO.	DATE	BY:	REVISION

Barton & Loguidice, P.C.

DESIGN BY: JMW | DRAFTED BY: JMW/JJB

DEPARTMENT OF TRANSPORTATION
50 WEST MAIN STREET, SUITE 6100
ROCHESTER, NEW YORK 14614-1231

UNAUTHORIZED ALTERATION OR ADDITION TO THIS DRAWING IS A VIOLATION OF THE NEW YORK STATE EDUCATION LAW ARTICLE 145, SECTION 7209

PROJECT NAME: WESTFALL ROAD
LIMITS: E. HENRIETTA ROAD TO LAC-DE-VILLE BLVD
TOWN: BRIGHTON | CITY: ROCHESTER
CAPITAL PROJECT NO.: 4753.77 | BRIDGE IDENTIFICATION NO.: N.A.

GENERAL NOTES

SCALE: NOT TO SCALE
DATE ISSUED: 4/25/2014
DRAWING NO. GN-3
SHEET NO. 15 OF 112

FILE NAME = I:\Shared\1000\1066005\AS-BUILTS\1066005_gn_03.dgn
DATE = 4/25/2014
TIME = 9:51:37 AM
mek
I:\MicroStation\Workspace\PLOT\NYSDOT\NYSDOT_SIZE_B.TBL
I:\MicroStation\Workspace\Plot\NYSDOT\NYSDOT_HPLJ5200_B.plt

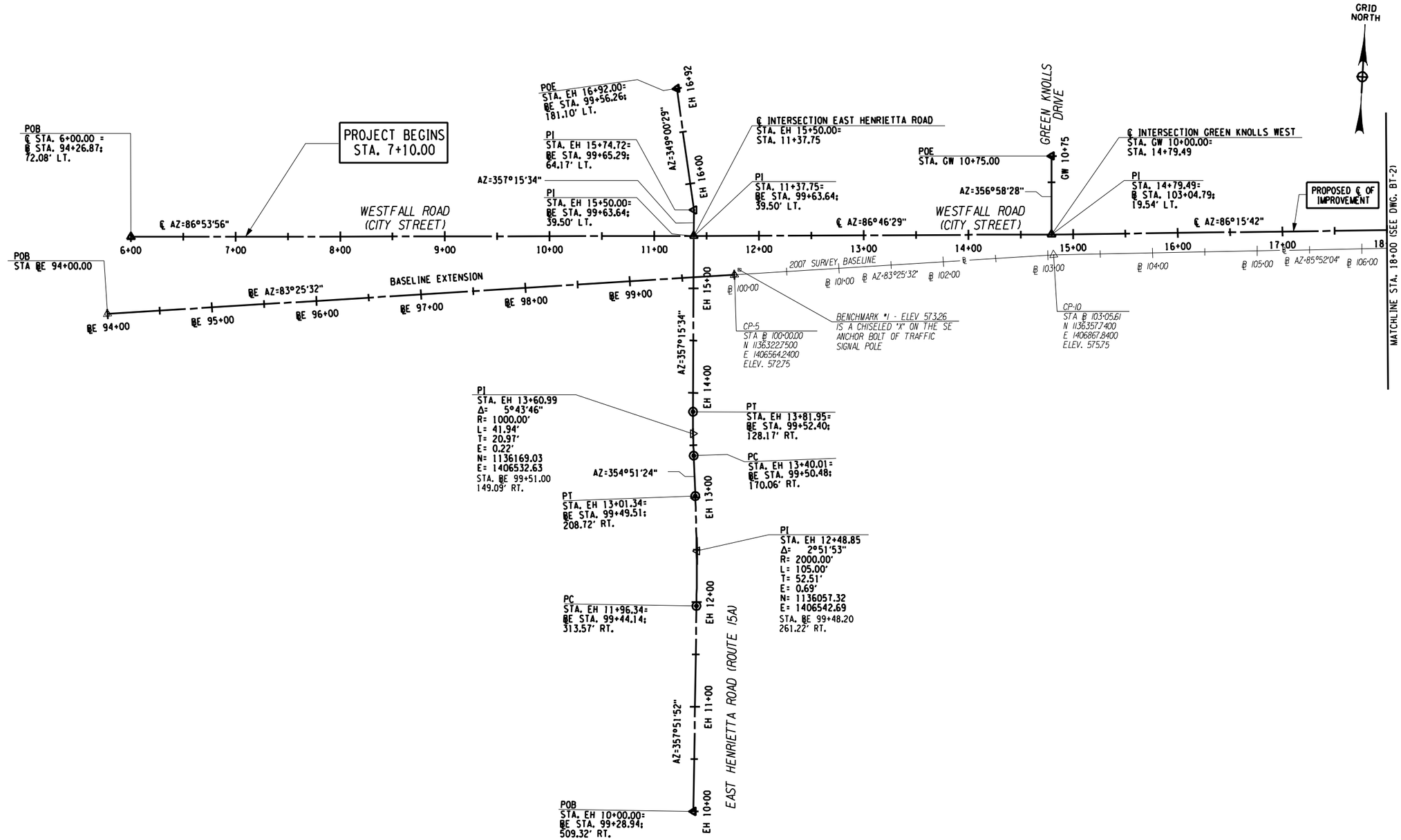

"I hereby certify by my signature and seal below, that I have prepared this record drawing which is, to the best of my knowledge and in my professional opinion, a true representation of the work as constructed on the Westfall Road Improvements Phase III, Project No. 1409."

STATE OF NEW YORK · MATTHEW J. SCHADLER · No. 069983 · LICENSED PROFESSIONAL ENGINEER

NO.	DATE	BY:	REVISION

NO AS-BUILT REVISIONS

Barton & Loguidice, P.C.

DESIGN BY: JMW
DRAFTED BY: JMW/JJB

DEPARTMENT OF TRANSPORTATION
50 WEST MAIN STREET, SUITE 6100
ROCHESTER, NEW YORK 14614-1231

UNAUTHORIZED ALTERATION OR ADDITION TO THIS DRAWING IS A VIOLATION OF THE NEW YORK STATE EDUCATION LAW ARTICLE 145, SECTION 7209

PROJECT NAME: WESTFALL ROAD
LIMITS: E. HENRIETTA ROAD TO LAC-DE-VILLE BLVD
TOWN: BRIGHTON
CITY: ROCHESTER
CAPITAL PROJECT NO.: 4753.77
BRIDGE IDENTIFICATION NO.: N.A.

ROADWAY ALIGNMENT GEOMETRY

SCALE: AS SHOWN
DATE ISSUED: 4/25/2014
DRAWING NO. BT-1
SHEET NO. 16 OF 112

mek
I:\MicroStation\Workspace\PLOT\NYSDOT\NYSDOT_SIZE_B.TBL
I:\MicroStation\Workspace\Plot\NYSDOT\NYSDOT_HPLJ5200_B.plt

FILE NAME = I:\Shared\1000\1066005\AS-BUILTS\1066005_bt_01.dgn
DATE = 4/25/2014
TIME = 9:52:47 AM

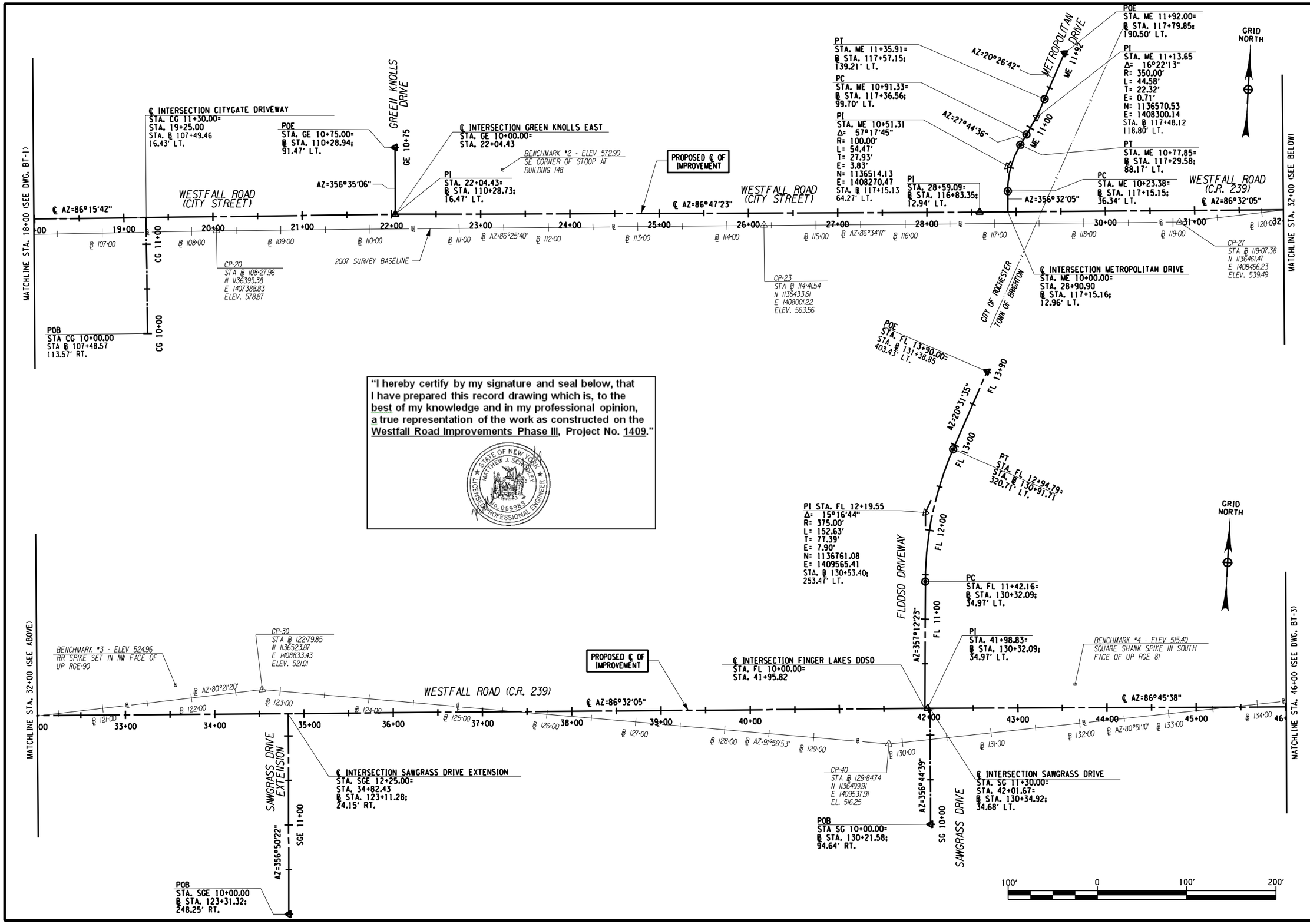

"I hereby certify by my signature and seal below, that I have prepared this record drawing which is, to the best of my knowledge and in my professional opinion, a true representation of the work as constructed on the Westfall Road Improvements Phase III, Project No. 1409."

STATE OF NEW YORK · MATTHEW J. SCANDLER · LICENSE No. 069983 · PROFESSIONAL ENGINEER

NO AS-BUILT REVISIONS

NO.	DATE	BY:	REVISION

Barton & Loguidice, P.C.

DRAFTED BY: JMW/JJB

DESIGN BY: JMW

DEPARTMENT OF TRANSPORTATION
50 WEST MAIN STREET, SUITE 6100
ROCHESTER, NEW YORK 14614-1231

UNAUTHORIZED ALTERATION OR ADDITION TO THIS DRAWING IS A VIOLATION OF THE NEW YORK STATE EDUCATION LAW ARTICLE 145, SECTION 7209

PROJECT NAME: WESTFALL ROAD
LIMITS: E. HENRIETTA ROAD TO LAC-DE-VILLE BLVD
TOWN: BRIGHTON
CITY: ROCHESTER
CAPITAL PROJECT NO.: 4753.77
BRIDGE IDENTIFICATION NO.: N.A.

ROADWAY ALIGNMENT GEOMETRY

SCALE: AS SHOWN
DATE ISSUED: 4/25/2014
DRAWING NO. BT-2
SHEET NO. 17 OF 112

mek
I:\MicroStation\Workspace\PLOT\NYSDOT\NYSDOT_SIZE_B.TBL
I:\MicroStation\Workspace\Plot\NYSDOT\NYSDOT_HPLJ5200_B.plt

FILE NAME = I:\Shared\1000\1066005\AS-BUILTS\1066005_bt_02.dgn
DATE = 4/25/2014
TIME = 9:55:24 AM

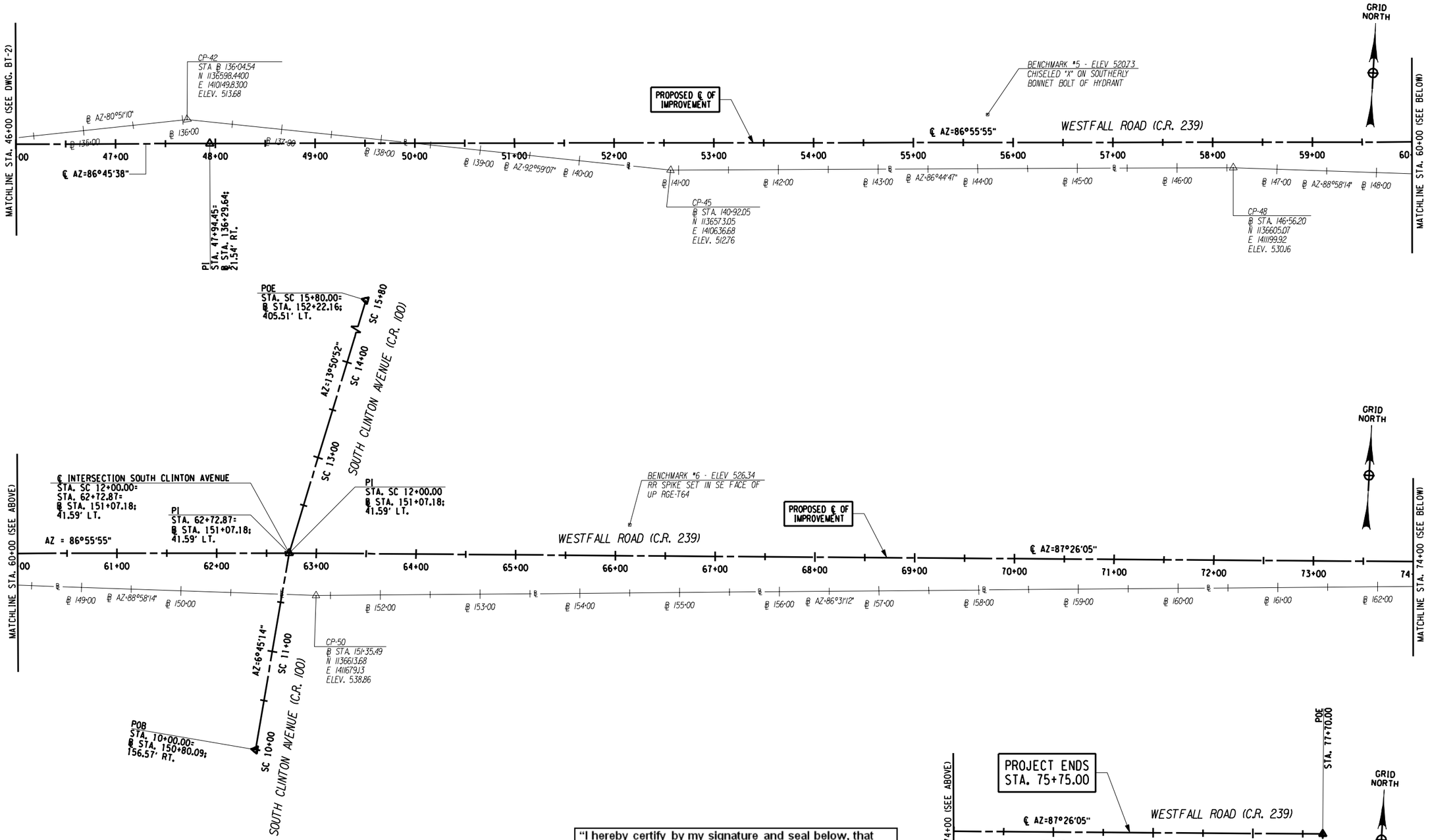

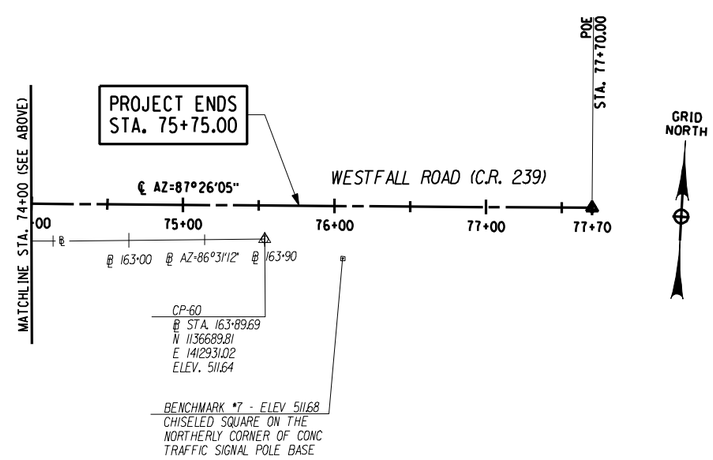

"I hereby certify by my signature and seal below, that I have prepared this record drawing which is, to the best of my knowledge and in my professional opinion, a true representation of the work as constructed on the Westfall Road Improvements Phase III, Project No. 1409."

STATE OF NEW YORK · MATTHEW J. SCANLEN · No. 059983 · LICENSED PROFESSIONAL ENGINEER

NO AS-BUILT REVISIONS

NO.	DATE	BY:	REVISION

Barton & Loguidice, P.C.

DESIGN BY: JMW
DRAFTED BY: JMW/JJB

DEPARTMENT OF TRANSPORTATION
50 WEST MAIN STREET, SUITE 6100
ROCHESTER, NEW YORK 14614-1231

UNAUTHORIZED ALTERATION OR ADDITION TO THIS DRAWING IS A VIOLATION OF THE NEW YORK STATE EDUCATION LAW ARTICLE 145, SECTION 7209

PROJECT NAME: WESTFALL ROAD
LIMITS: E. HENRIETTA ROAD TO LAC-DE-VILLE BLVD
TOWN: BRIGHTON
CITY: ROCHESTER
CAPITAL PROJECT NO.: 4753.77
BRIDGE IDENTIFICATION NO.: N.A.

ROADWAY ALIGNMENT GEOMETRY

SCALE: AS SHOWN
DATE ISSUED: 4/25/2014
DRAWING NO. BT-3
SHEET NO. 18 OF 112

mek
I:\MicroStation\Workspace\PLOT\NYSDOT\NYSDOT_SIZE_B.TBL
I:\MicroStation\Workspace\Plot\NYSDOT\NYSDOT_HPLJ5200_B.plt

FILE NAME = L:\Shared\1000\1066005\AS-BUILTS\1066005_bt_03.dgn
DATE = 4/25/2014
TIME = 9:55:59 AM

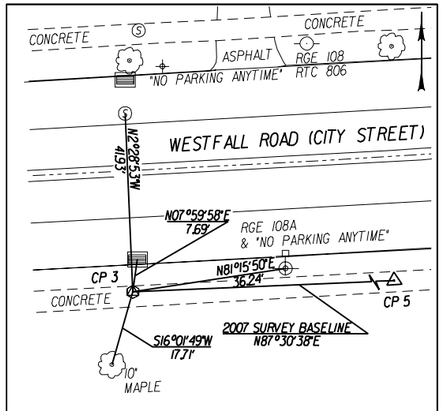

TIES NOT TO SCALE

CP 3 STA. 92+24.34

CP #3 IS A MAG NAIL LOCATED ON THE SOUTH SIDE OF WESTFALL ROAD (C.R. 239) 742'± WEST OF THE ℄ OF THE INTERSECTION OF EAST HENRIETTA ROAD (STATE ROUTE 15A) AND WESTFALL ROAD (C.R. 239) 6.1' OFF THE SOUTH EDGE OF PAVEMENT.

NYSPCS NAD 83 (88) ZONE WESTERN
N 1,136,289.06
E 1,405,789.31
ELEV 562.84

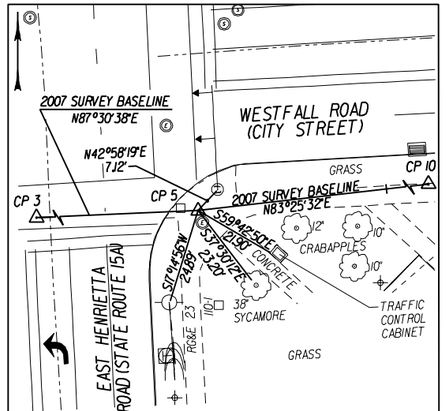

TIES NOT TO SCALE

CP 5 STA. 100+00.00

CP #5 IS A DRILL HOLE IN THE CONCRETE SIDEWALK 5.70' RADIALLY OFF THE FACE OF CURB ON THE SOUTHEASTERLY CORNER OF THE INTERSECTION OF WESTFALL ROAD (C.R. 239) AND EAST HENRIETTA ROAD (STATE ROUTE 15A).

NYSPCS NAD 83 (88) ZONE WESTERN
N 1,136,322.75
E 1,406,564.24
ELEV 572.75

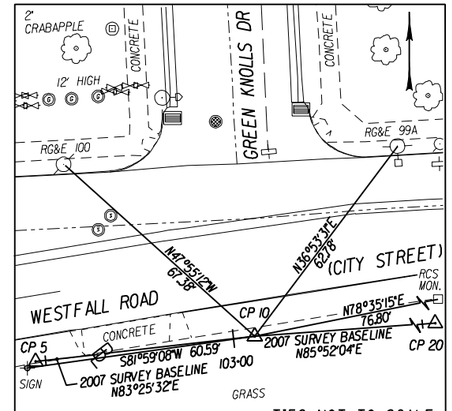

TIES NOT TO SCALE

CP 10 STA. 103+05.61

CP #10 IS A REBAR WITH CAP LOCATED ON THE SOUTH SIDE OF WESTFALL ROAD (C.R. 239) 342'± EAST OF THE ℄ OF EAST HENRIETTA ROAD (STATE ROUTE 15A) AND AT THE PROJECTED ℄ OF GREEN KNOLLS DRIVE.

NYSPCS NAD 83 (88) ZONE WESTERN
N 1,136,357.74
E 1,406,867.84
ELEV 575.75

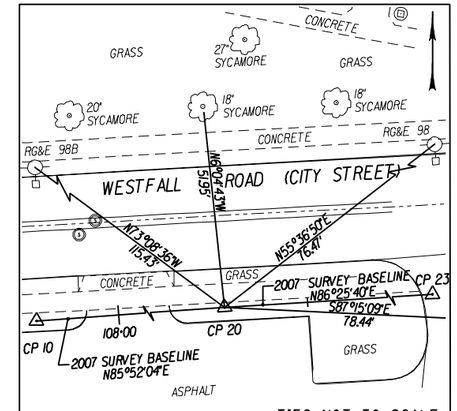

TIES NOT TO SCALE

CP 20 STA. 108+27.96

CP #20 IS A REBAR WITH CAP LOCATED ON THE SOUTH SIDE OF WESTFALL ROAD (C.R. 239) 0.16± MILES EAST OF THE ℄ OF EAST HENRIETTA ROAD (STATE ROUTE 15A) 1.3'± OFF THE SOUTH EDGE OF CONCRETE SIDEWALK.

NYSPCS NAD 83 (88) ZONE WESTERN
N 1,136,395.38
E 1,407,388.83
ELEV 578.87

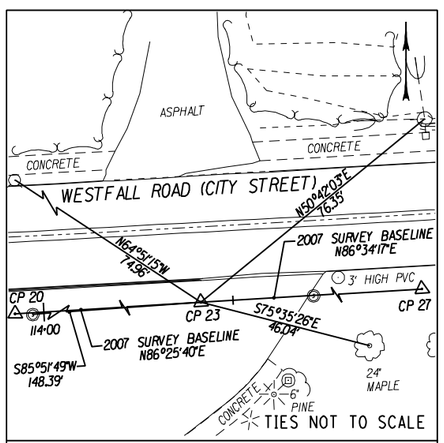

TIES NOT TO SCALE

CP 23 STA. 114+41.54

CP #23 IS A PK NAIL LOCATED ON THE SOUTH SIDE OF WESTFALL ROAD (C.R. 239) 0.28± MILES EAST OF THE ℄ OF EAST HENRIETTA ROAD (STATE ROUTE 15A) 6.2'± OFF THE SOUTH FACE OF CURB IN ASPHALT PARKING LOT.

NYSPCS NAD 83 (88) ZONE WESTERN
N 1,136,433.61
E 1,408,001.22
ELEV 563.56

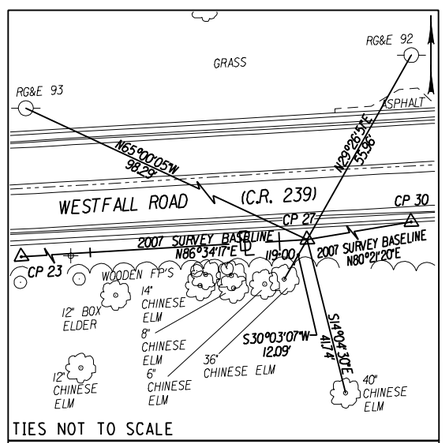

TIES NOT TO SCALE

CP 27 STA. 119+07.38

CP #27 IS A 60D NAIL LOCATED ON THE SOUTH SIDE OF WESTFALL ROAD (C.R. 239) 215'± EAST OF THE ℄ OF METROPOLITAN DRIVE 3.1'± OFF THE SOUTH EDGE OF CONCRETE GUTTER.

NYSPCS NAD 83 (88) ZONE WESTERN
N 1,136,461.47
E 1,408,466.23
ELEV 539.49

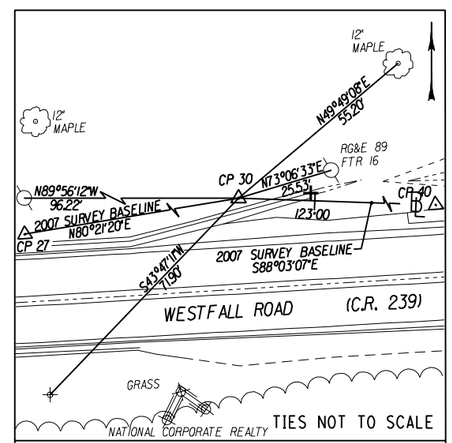

TIES NOT TO SCALE

CP 30 STA. 122+79.85

CP #30 IS A REBAR WITH CAP LOCATED ON THE NORTH SIDE OF WESTFALL ROAD (C.R. 239) 0.11± MILES EAST OF THE ℄ OF METROPOLITAN DRIVE 2.6'± OFF THE NORTH EDGE OF CONCRETE GUTTER.

NYSPCS NAD 83 (88) ZONE WESTERN
N 1,136,523.87
E 1,408,833.43
ELEV 521.01

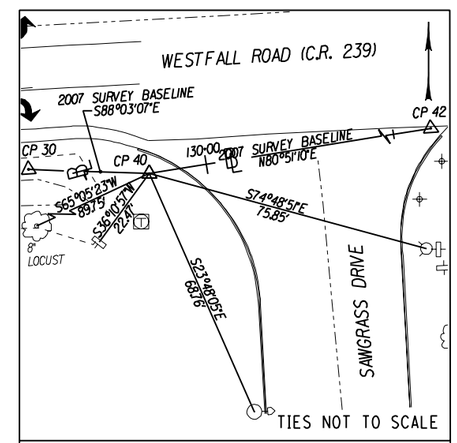

TIES NOT TO SCALE

CP 40 STA. 129+84.74

CP #40 IS A REBAR WITH CAP LOCATED 5.3'± RADIALLY OFF THE FACE OF CURB ON THE WESTERLY CORNER OF THE INTERSECTION OF WESTFALL ROAD (C.R. 239) AND SAWGRASS DRIVE.

NYSPCS NAD 83 (88) ZONE WESTERN
N 1,136,499.91
E 1,409,537.91
ELEV 516.25

NO AS-BUILT REVISIONS

NO.	DATE	BY:	REVISION

Barton & Loguidice, P.C.

DRAFTED BY: JMW/JJB
DESIGN BY: JMW

DEPARTMENT OF TRANSPORTATION
50 WEST MAIN STREET, SUITE 6100
ROCHESTER, NEW YORK 14614-1231

UNAUTHORIZED ALTERATION OR ADDITION TO THIS DRAWING IS A VIOLATION OF THE NEW YORK STATE EDUCATION LAW ARTICLE 145, SECTION 7209

PROJECT NAME: WESTFALL ROAD
LIMITS: E. HENRIETTA ROAD TO LAC-DE-VILLE BLVD
TOWN: BRIGHTON
CITY: ROCHESTER
CAPITAL PROJECT NO.: 4753.77
BRIDGE IDENTIFICATION NO.: N.A.

BASELINE TIES AND BENCH MARKS

SCALE: NOT TO SCALE
DATE ISSUED: 4/25/2014
DRAWING NO. BT-4
SHEET NO. 19 OF 112

mek
I:\MicroStation\Workspace\PLOT\NYSDOT\NYSDOT_SIZE_B.TBL
I:\MicroStation\Workspace\Plot\NYSDOT\NYSDOT_HPLJ5200_B.plt

FILE NAME = I:\Shared\1000\1066005\AS-BUILTS\1066005_bt_04.dgn
DATE = 4/25/2014
TIME = 9:56:23 AM

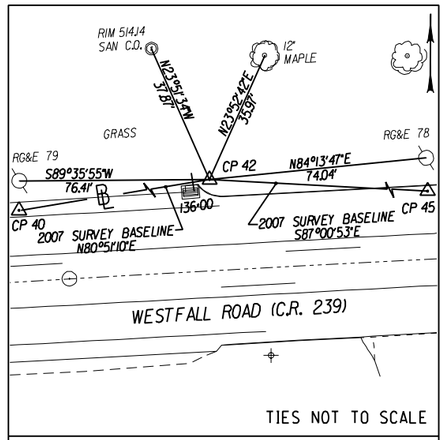

TIES NOT TO SCALE

CP 42 STA. 136+04.54

CP #42 IS A MCGS MONUMENT #2715 LOCATED ON THE NORTH SIDE OF WESTFALL ROAD (C.R. 239) 0.12± MILES EAST OF THE ℄ OF SAWGRASS DRIVE 6.0'± NORTHEAST OF CATCH BASIN.

NYSPCS NAD 83 (88) ZONE WESTERN
N 1,136,598.44
E 1,410,149.83
ELEV 513.68

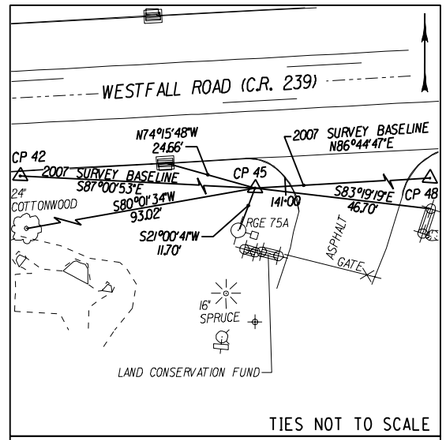

TIES NOT TO SCALE

CP 45 STA. 140+92.05

CP #45 IS A REBAR WITH CAP LOCATED ON THE SOUTH SIDE OF WESTFALL ROAD (C.R. 239) 0.19± MILES WEST OF THE ℄ OF INTERSECTION OF CLINTON AVENUE SOUTH (C.R. 100) AND WESTFALL ROAD (C.R. 239) 7.9'± OFF THE SOUTH EDGE OF PAVEMENT.

NYSPCS NAD 83 (88) ZONE WESTERN
N 1,136,573.05
E 1,410,636.68
ELEV 512.76

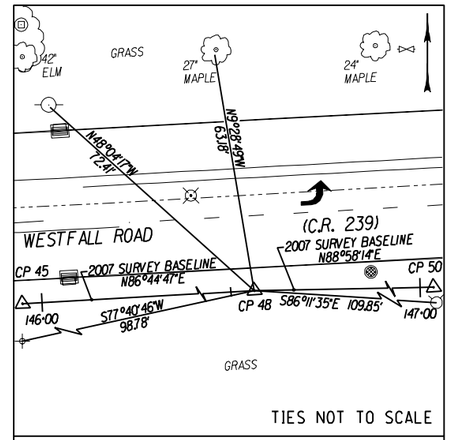

TIES NOT TO SCALE

CP 48 STA. 146+56.20

CP #48 IS A REBAR WITH CAP LOCATED ON THE SOUTH SIDE OF WESTFALL ROAD (C.R. 239) 454'± WEST OF THE ℄ OF INTERSECTION OF CLINTON AVENUE SOUTH (C.R. 100) AND WESTFALL ROAD (C.R. 239) 6.0'± OFF THE SOUTH EDGE OF PAVEMENT.

NYSPCS NAD 83 (88) ZONE WESTERN
N 1,136,605.07
E 1,411,199.92
ELEV 530.16

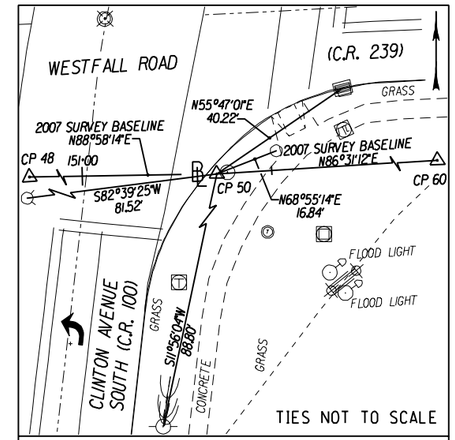

TIES NOT TO SCALE

CP 50 STA. 151+35.49

CP #50 IS A MCGS MONUMENT #2714 2.0' RADIALLY OFF THE FACE OF CURB ON THE SOUTHEASTERLY CORNER OF THE INTERSECTION OF WESTFALL ROAD (C.R. 239) AND CLINTON AVENUE SOUTH (C.R. 100).

NYSPCS NAD 83 (88) ZONE WESTERN
N 1,136,613.68
E 1,411,679.13
ELEV 538.86

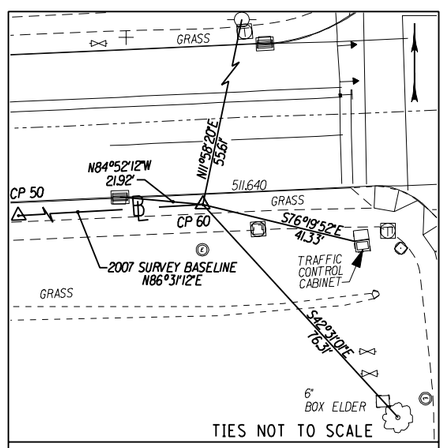

TIES NOT TO SCALE

CP 60 STA. 163+89.69

CP #60 IS A MCGS MONUMENT LOCATED ON THE SOUTH SIDE OF WESTFALL ROAD (C.R. 239) 84'± WEST OF THE ℄ OF INTERSECTION OF LAC DE VILLE BLVD AND WESTFALL ROAD (C.R. 239) 2.9'± OFF THE SOUTH FACE OF CURB.

NYSPCS NAD 83 (88) ZONE WESTERN
N 1,136,689.81
E 1,412,931.02
ELEV 511.64

BENCHMARK TABLE

NAME	DESCRIPTION	ELEV
BM # 1	BENCHMARK IS A CHISELED "X" ON THE SE ANCHOR BOLT OF TRAFFIC SIGNAL POLE ON THE SOUTHEAST CORNER OF THE INTERSECTION OF EAST HENRIETTA ROAD (C.R. 15A) AND WESTFALL ROAD (C.R. 239)	573.28
BM # 2	BENCHMARK IS THE SOUTHEAST CORNER OF STOOP AT INTERSECTION OF CONCRETE SIDEWALK INFRONT OF BUILDING NUMBER 148 WESTFALL ROAD (C.R. 239)	572.89
BM # 3	BENCHMARK IS A RAILROAD SPIKE SET IN NW FACE OF UP RGE-90 LOCATED ON THE NORTH SIDE OF WESTFALL ROAD (C.R. 239) 0.2 MILES WEST OF SAWGRASS DRIVE.	524.94
BM # 4	BENCHMARK IS A SQUARE SHANK SPIKE IN SOUTH FACE OF UP RGE 81 LOCATED ON NORTH SIDE OF WESTFALL ROAD (C.R. 239) JUST EAST OF SAWGRASS DRIVE	515.33
BM # 5	BENCHMARK IS A CHISELED "X" ON SOUTHERLY BONNET BOLT OF HYDRANT LOCATED NEXT TO UTILITY POLE RGE 72 WHICH IS 0.1 MILES WEST OF CLINTON AVENUE SOUTH (C.R. 100).	520.70
BM # 6	BENCHMARK IS A RAILROAD SPIKE SET IN SE FACE OF UP RGE-T64 ON NORTH SIDE OF WESTFALL ROAD (C.R. 239) WHICH IS 0.01 MILES EAST OF CLINTON AVENUE SOUTH (C.R. 100).	526.34
BM # 7	BENCHMARK IS A CHISELED SQUARE ON THE NORTHERLY CORNER OF CONC TRAFFIC SIGNAL POLE BASE LOCATED ON THE SOUTHWESTERLY CORNER OF WESTFALL ROAD (C.R. 239) AND LAC DE VILLE BLVD.	511.69

NOTES:

1. THE HORIZONTAL DATUM SHOWN HEREON IS REFERENCED TO THE NEW YORK STATE PLANE COORDINATE SYSTEM, NAD83 TRANSVERSE MERCATOR PROJECTION, WESTERN ZONE. THE COORDINATES WERE ESTABLISHED ON THE MAIN CONTROL POINTS BY GPS METHODS, INCORPORATING THE CORS DATA AVAILABLE ON THE DATE OF THE GPS MISSION, USING CORS STATIONS:

CORS_ID_NYMC	CORS_ID_NYBT	CORS_ID_NYPF
N = 1,135,195.53	N = 1,089,157.72	N = 1,128,821.88
E = 1,407,020.67	E = 1,271,637.01	E = 1,430,892.07
	ELEV.=974.15	ELEV.=488.48

2. THE VERTICAL DATUM SHOWN HEREON IS REFERENCED TO NAVD88 DATUM. ELEVATIONS WERE ESTABLISHED ON MAIN CONTROL POINTS AND PROJECT BENCHMARKS BY A DIFFERENTIAL LEVEL RUN BETWEEN NYGS MONUMENT STATION 110-1, ELEVATION=572.40, MONUMENT STATION CITY LINE #1, ELEVATION=554.65, MCGS MONUMENT STATION 2715, ELEVATION=513.69, MCGS MONUMENT STATION 2714, ELEVATION=538.87 AND MCGS MONUMENT STATION 2706, ELEVATION=511.64.

3. PRIOR TO THE COMPLETION OF THE CONTRACT, THE CONTRACTOR SHALL RE-ESTABLISH AND RETIE, IF DISTURBED, ALL CONTROL POINTS, AND REPLACE ANY EXISTING PROPERTY LINE MONUMENTATION IF DISTURBED.

NO AS-BUILT REVISIONS

NO.	DATE	BY:	REVISION

Barton & Loguidice, P.C.

DESIGN BY: JMW
DRAFTED BY: JMW/JJB

DEPARTMENT OF TRANSPORTATION
50 WEST MAIN STREET, SUITE 6100
ROCHESTER, NEW YORK 14614-1231

UNAUTHORIZED ALTERATION OR ADDITION TO THIS DRAWING IS A VIOLATION OF THE NEW YORK STATE EDUCATION LAW ARTICLE 145, SECTION 7209

PROJECT NAME: WESTFALL ROAD
LIMITS: E. HENRIETTA ROAD TO LAC-DE-VILLE BLVD
TOWN: BRIGHTON
CITY: ROCHESTER
CAPITAL PROJECT NO.: 4753.77
BRIDGE IDENTIFICATION NO.: N.A.

BASELINE TIES AND BENCH MARKS

SCALE: NOT TO SCALE
DATE ISSUED: 4/25/2014
DRAWING NO. BT-5
SHEET NO. 20 OF 112

mek
I:\MicroStation\Workspace\PLOT\NYSDOT\NYSDOT_SIZE_B.TBL
I:\MicroStation\Workspace\Plot\NYSDOT\NYSDOT_HPLJ5200_B.plt

FILE NAME = I:\Shared\1000\1066005\AS-BUILTS\1066005_bt_05.dgn
DATE = 4/25/2014
TIME = 9:56:44 AM

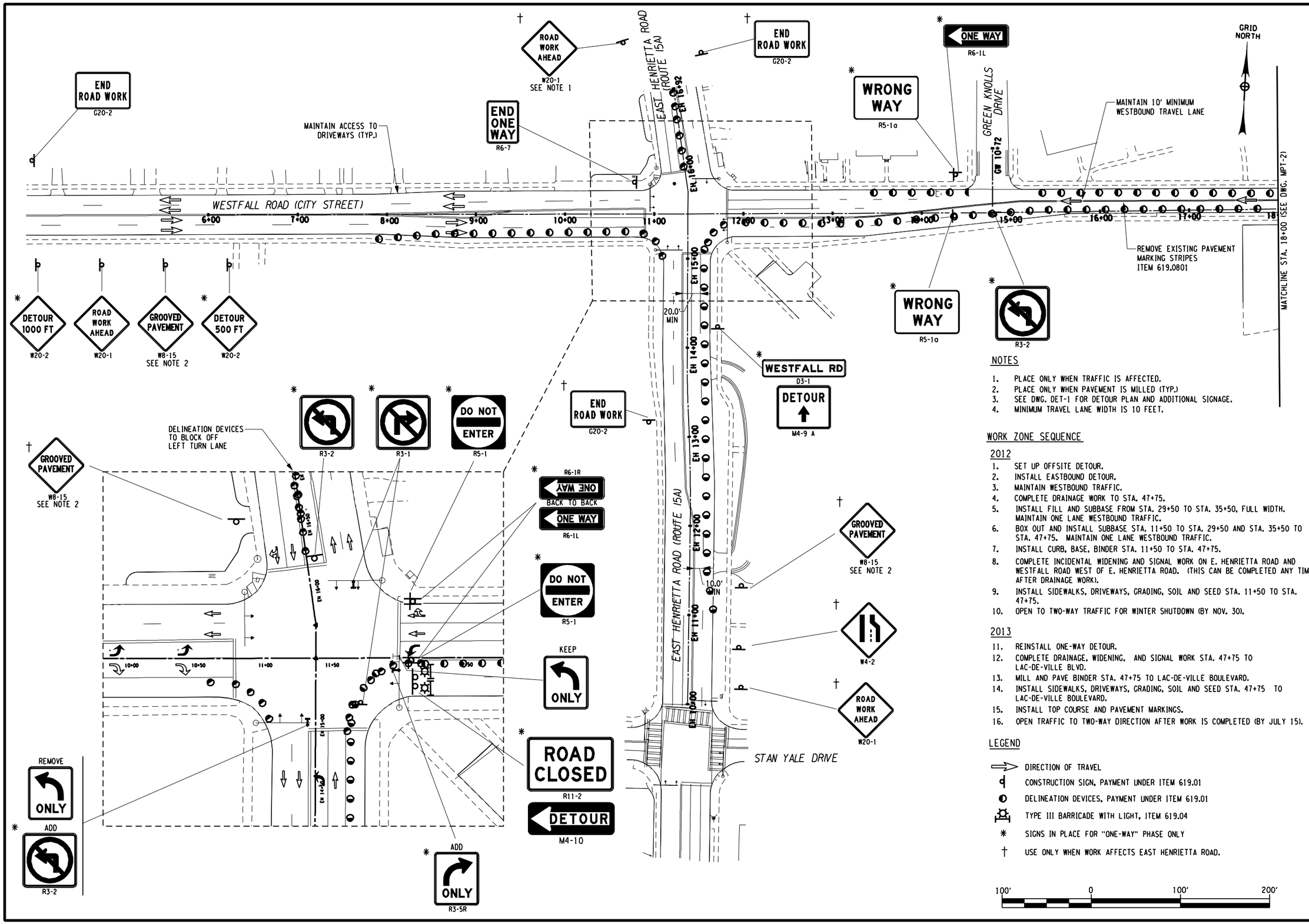

NOTES

1. PLACE ONLY WHEN TRAFFIC IS AFFECTED.
2. PLACE ONLY WHEN PAVEMENT IS MILLED (TYP.)
3. SEE DWG. DET-1 FOR DETOUR PLAN AND ADDITIONAL SIGNAGE.
4. MINIMUM TRAVEL LANE WIDTH IS 10 FEET.

WORK ZONE SEQUENCE

2012

1. SET UP OFFSITE DETOUR.
2. INSTALL EASTBOUND DETOUR.
3. MAINTAIN WESTBOUND TRAFFIC.
4. COMPLETE DRAINAGE WORK TO STA. 47+75.
5. INSTALL FILL AND SUBBASE FROM STA. 29+50 TO STA. 35+50, FULL WIDTH. MAINTAIN ONE LANE WESTBOUND TRAFFIC.
6. BOX OUT AND INSTALL SUBBASE STA. 11+50 TO STA. 29+50 AND STA. 35+50 TO STA. 47+75. MAINTAIN ONE LANE WESTBOUND TRAFFIC.
7. INSTALL CURB, BASE, BINDER STA. 11+50 TO STA. 47+75.
8. COMPLETE INCIDENTAL WIDENING AND SIGNAL WORK ON E. HENRIETTA ROAD AND WESTFALL ROAD WEST OF E. HENRIETTA ROAD. (THIS CAN BE COMPLETED ANY TIME AFTER DRAINAGE WORK).
9. INSTALL SIDEWALKS, DRIVEWAYS, GRADING, SOIL AND SEED STA. 11+50 TO STA. 47+75.
10. OPEN TO TWO-WAY TRAFFIC FOR WINTER SHUTDOWN (BY NOV. 30).

2013

11. REINSTALL ONE-WAY DETOUR.
12. COMPLETE DRAINAGE, WIDENING, AND SIGNAL WORK STA. 47+75 TO LAC-DE-VILLE BLVD.
13. MILL AND PAVE BINDER STA. 47+75 TO LAC-DE-VILLE BOULEVARD.
14. INSTALL SIDEWALKS, DRIVEWAYS, GRADING, SOIL AND SEED STA. 47+75 TO LAC-DE-VILLE BOULEVARD.
15. INSTALL TOP COURSE AND PAVEMENT MARKINGS.
16. OPEN TRAFFIC TO TWO-WAY DIRECTION AFTER WORK IS COMPLETED (BY JULY 15).

LEGEND

- DIRECTION OF TRAVEL
- CONSTRUCTION SIGN, PAYMENT UNDER ITEM 619.01
- DELINEATION DEVICES, PAYMENT UNDER ITEM 619.01
- TYPE III BARRICADE WITH LIGHT, ITEM 619.04
- * SIGNS IN PLACE FOR "ONE-WAY" PHASE ONLY
- † USE ONLY WHEN WORK AFFECTS EAST HENRIETTA ROAD.

NO AS-BUILT REVISIONS

NO.	DATE	BY:	REVISION

Barton & Loguidice, P.C.

DRAFTED BY: JMW/JJB
DESIGN BY: JMW

DEPARTMENT OF TRANSPORTATION
50 WEST MAIN STREET, SUITE 6100
ROCHESTER, NEW YORK 14614-1231

UNAUTHORIZED ALTERATION OR ADDITION TO THIS DRAWING IS A VIOLATION OF THE NEW YORK STATE EDUCATION LAW ARTICLE 145, SECTION 7209

PROJECT NAME: WESTFALL ROAD
LIMITS: E. HENRIETTA ROAD TO LAC-DE-VILLE BLVD
TOWN: BRIGHTON
CITY: ROCHESTER
CAPITAL PROJECT NO.: 4753.77
BRIDGE IDENTIFICATION NO.: N.A.

WORK ZONE TRAFFIC CONTROL PLAN

SCALE: AS SHOWN
DATE ISSUED: 4/25/2014
DRAWING NO. MPT-1
SHEET NO. 21 OF 112

mek
I:\MicroStation\Workspace\PLOT\NYSDOT\NYSDOT_SIZE_B.TBL
I:\MicroStation\Workspace\Plot\NYSDOT\NYSDOT_HPLJ5200_B.plt

FILE NAME = I:\Shared\1000\1066005\AS-BUILTS\1066005_mpt_01.dgn
DATE = 4/25/2014
TIME = 9:57:49 AM

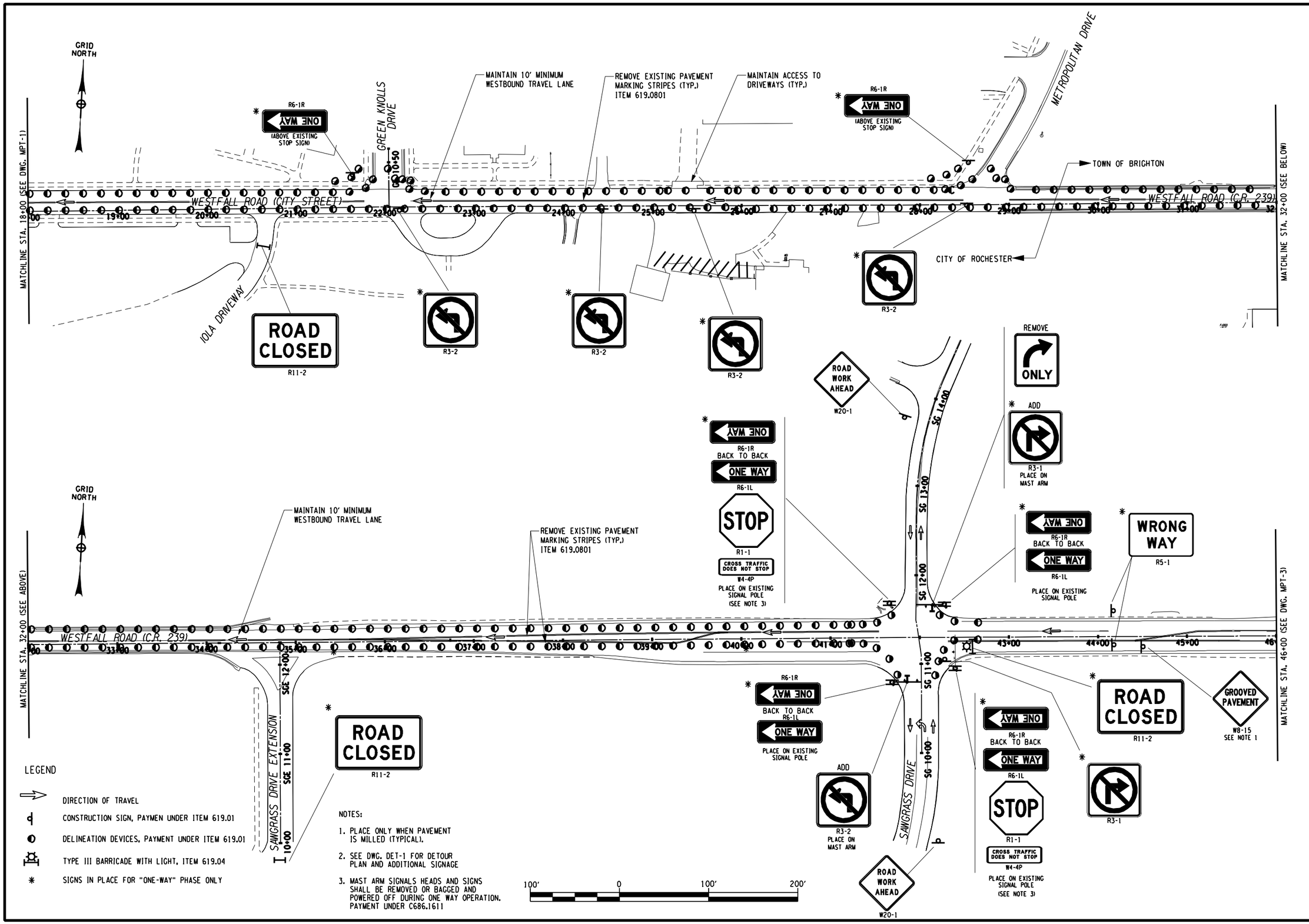

NO AS-BUILT REVISIONS

NO.	DATE	BY:	REVISION

Barton & Loguidice, P.C.

DESIGN BY: JMW
DRAFTED BY: JMW/JJB

DEPARTMENT OF TRANSPORTATION
50 WEST MAIN STREET, SUITE 6100
ROCHESTER, NEW YORK 14614-1231

UNAUTHORIZED ALTERATION OR ADDITION TO THIS DRAWING IS A VIOLATION OF THE NEW YORK STATE EDUCATION LAW ARTICLE 145, SECTION 7209

PROJECT NAME: WESTFALL ROAD
LIMITS: E. HENRIETTA ROAD TO LAC-DE-VILLE BLVD
TOWN: BRIGHTON
CITY: ROCHESTER
CAPITAL PROJECT NO.: 4753.77
BRIDGE IDENTIFICATION NO.: N.A.

WORK ZONE TRAFFIC CONTROL PLAN

SCALE: AS SHOWN
DATE ISSUED: 4/25/2014
DRAWING NO. MPT-2
SHEET NO. 22 OF 112

mek
I:\MicroStation\Workspace\PLOT\NYSDOT\NYSDOT_SIZE_B.TBL
I:\MicroStation\Workspace\Plot\NYSDOT\NYSDOT_HPLJ5200_B.plt

FILE NAME = I:\Shared\1000\1066005\AS-BUILTS\1066005_mpt_02.dgn
DATE = 4/25/2014
TIME = 9:58:14 AM

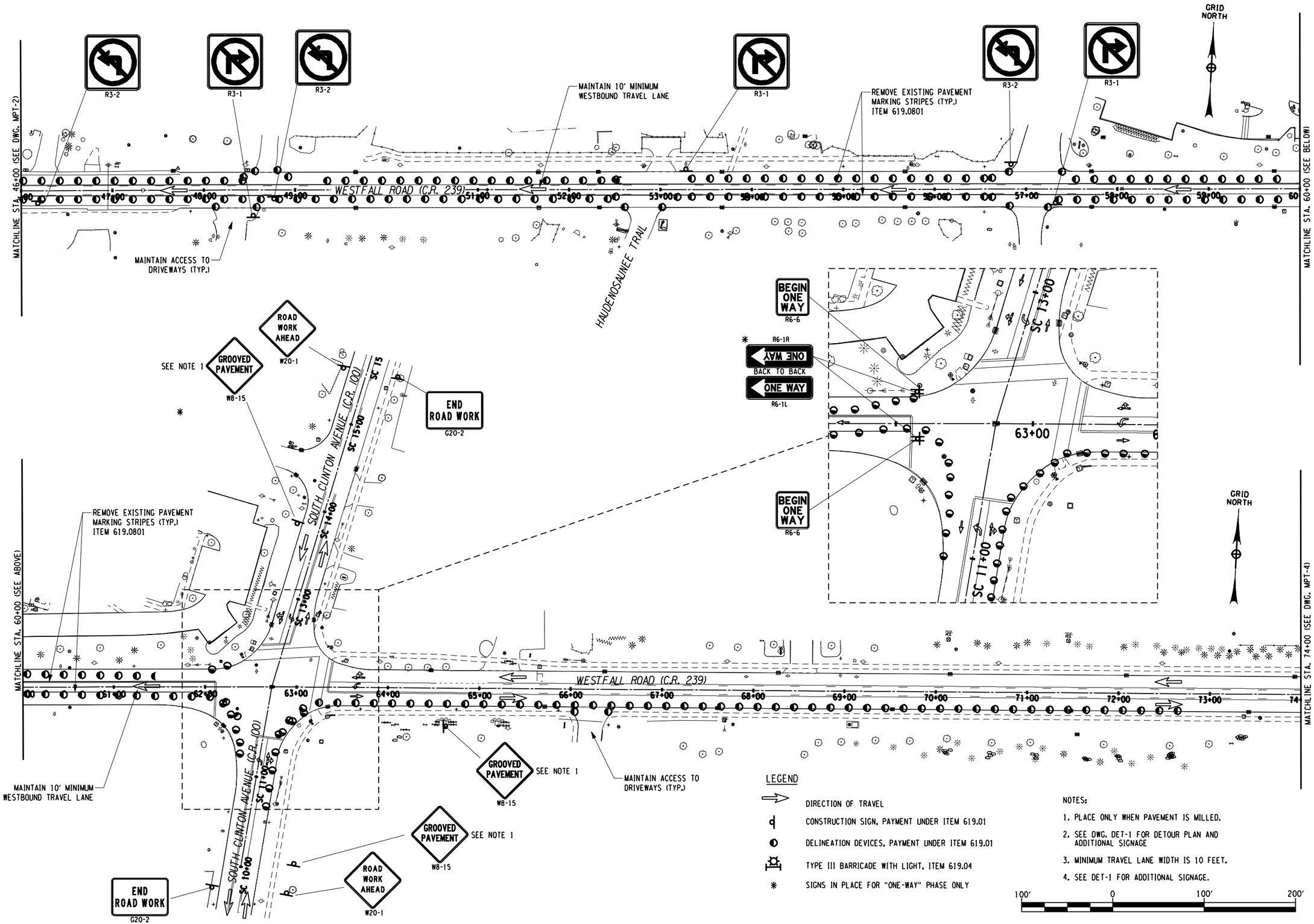

NO AS-BUILT REVISIONS

NO.	DATE	BY:	REVISION

Barton & Loguidice, P.C.

DRAFTED BY: JMW/JJB

DESIGN BY: JMW

DEPARTMENT OF TRANSPORTATION
50 WEST MAIN STREET, SUITE 6100
ROCHESTER, NEW YORK 14614-1231

UNAUTHORIZED ALTERATION OR ADDITION TO THIS DRAWING IS A VIOLATION OF THE NEW YORK STATE EDUCATION LAW ARTICLE 145, SECTION 7209

PROJECT NAME: WESTFALL ROAD
LIMITS: E. HENRIETTA ROAD TO LAC-DE-VILLE BLVD
TOWN: BRIGHTON
CITY: ROCHESTER
CAPITAL PROJECT NO.: 4753.77
BRIDGE IDENTIFICATION NO.: N.A.

WORK ZONE TRAFFIC CONTROL PLAN

SCALE: AS SHOWN
DATE ISSUED: 4/25/2014
DRAWING NO. MPT-3
SHEET NO. 23 OF 112

mek
I:\MicroStation\Workspace\PLOT\NYSDOT\NYSDOT_SIZE_B.TBL
I:\MicroStation\Workspace\Plot\NYSDOT\NYSDOT_HPLJ5200_B.plt

FILE NAME = I:\Shared\1000\1066005\AS-BUILTS\1066005_mpt_03.dgn
DATE = 4/25/2014
TIME = 9:58:42 AM

NOTE:

SEE DWG. DET-1 FOR DETOUR PLAN AND ADDITIONAL SIGNAGE

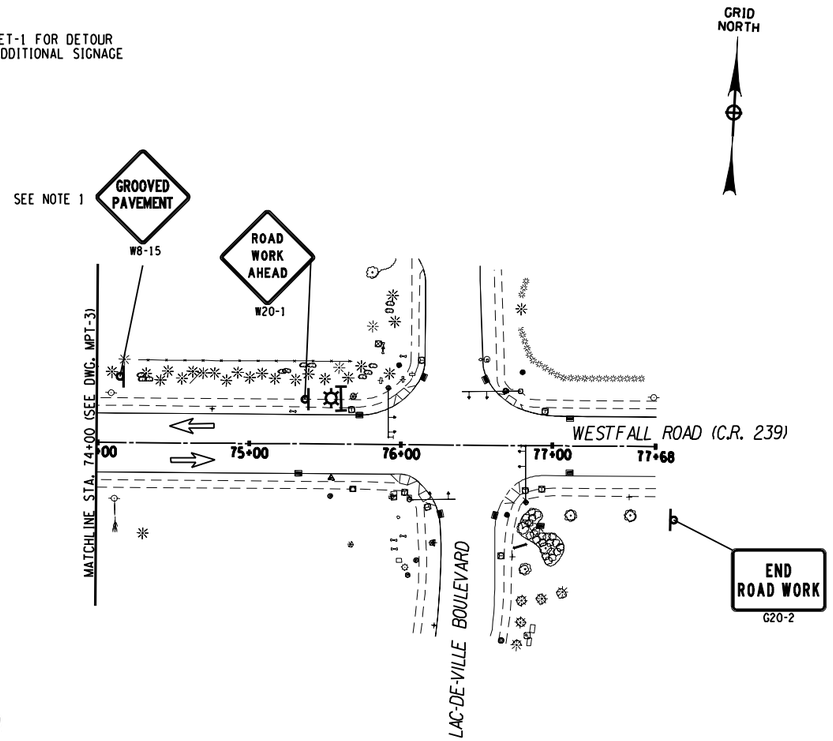

LEGEND

- DIRECTION OF TRAVEL
- CONSTRUCTION SIGN, PAYMENT UNDER ITEM 619.01
- DELINEATION DEVICES, PAYMENT UNDER ITEM 619.01
- TYPE III BARRICADE WITH LIGHT, ITEM 619.04
- SIGNS IN PLACE FOR "ONE-WAY" PHASE ONLY

100' 0 100' 200'

NOTE:

1. PLACE ONLY WHEN PAVEMENT IS MILLED.

NO AS-BUILT REVISIONS

NO.	DATE	BY:	REVISION

Barton & Loguidice, P.C.

DESIGN BY: JMW DRAFTED BY: JMW/JJB

DEPARTMENT OF TRANSPORTATION
50 WEST MAIN STREET, SUITE 6100
ROCHESTER, NEW YORK 14614-1231

UNAUTHORIZED ALTERATION OR ADDITION TO THIS DRAWING IS A VIOLATION OF THE NEW YORK STATE EDUCATION LAW ARTICLE 145, SECTION 7209

PROJECT NAME: WESTFALL ROAD
LIMITS: E. HENRIETTA ROAD TO LAC-DE-VILLE BLVD
TOWN: BRIGHTON
CITY: ROCHESTER
CAPITAL PROJECT NO.: 4753.77
BRIDGE IDENTIFICATION NO.: N.A.

WORK ZONE TRAFFIC CONTROL PLAN

SCALE: AS SHOWN
DATE ISSUED: 4/25/2014
DRAWING NO. MPT-4
SHEET NO. 24 OF 112

mek
I:\MicroStation\Workspace\PLOT\NYSDOT\NYSDOT_SIZE_B.TBL
I:\MicroStation\Workspace\Plot\NYSDOT\NYSDOT_HPLJ5200_B.plt

FILE NAME = I:\Shared\1000\1066005\AS-BUILTS\1066005_MPT_04.dgn
DATE = 4/25/2014
TIME = 9:59:09 AM

mek
I:\MicroStation\Workspace\PLOT\NYSDOT\NYSDOT_SIZE_B.TBL
I:\MicroStation\Workspace\Plot\NYSDOT\NYSDOT_HPLJ5200_B.plt

GRID NORTH

1. DETOUR AND ONE-WAY SIGNING SHALL BE INSTALLED PER CURRENT MUTCD.
2. DETOUR AND ONE-WAY SIGN LOCATIONS ARE TO BE LAID OUT BY THE CONTRACTOR AND APPROVED BY THE RESIDENT PROJECT REPRESENTATIVE PRIOR TO INSTALLATION.
3. REFER TO DWGS. MPT-1 THRU MPT-4 FOR SIGNAGE IN AREA OF ONE-WAY TRAFFIC ON WESTFALL ROAD.
4. STREET NAME SIGNS (D3-1) USED TO SUPPLEMENT DETOUR SIGNS SHALL HAVE BLACK 6" LETTERS ON AN ORANGE BACKGROUND.

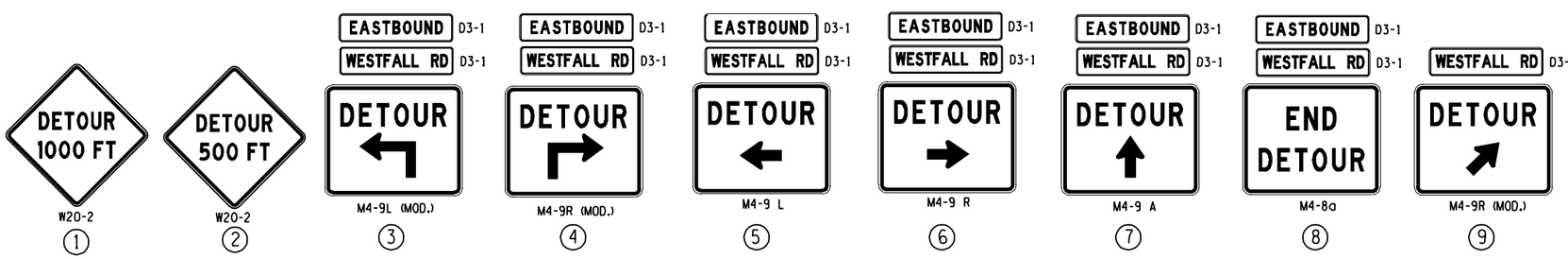

LEGEND

	DETOUR ROUTE
	AREA OF ONE-WAY TRAFFIC
	INTENDED DIRECTION OF TRAFFIC

NO AS-BUILT REVISIONS

NO.	DATE	BY:	REVISION

Barton & Loguidice, P.C.

DESIGN BY: JMW
DRAFTED BY: JMW/JJB

DEPARTMENT OF TRANSPORTATION
50 WEST MAIN STREET, SUITE 6100
ROCHESTER, NEW YORK 14614-1231

UNAUTHORIZED ALTERATION OR ADDITION TO THIS DRAWING IS A VIOLATION OF THE NEW YORK STATE EDUCATION LAW ARTICLE 145, SECTION 7209

PROJECT NAME: WESTFALL ROAD
LIMITS: E. HENRIETTA ROAD TO LAC-DE-VILLE BLVD
TOWN: BRIGHTON
CITY: ROCHESTER
CAPITAL PROJECT NO.: 4753.77
BRIDGE IDENTIFICATION NO.: N.A.

WORK ZONE TRAFFIC CONTROL DETOUR PLAN

SCALE: NOT TO SCALE
DATE ISSUED: 4/25/2014
DRAWING NO. DET-1
SHEET NO. 25 OF 112

FILE NAME = I:\Shared\1000\1066005\AS-BUILTS\1066005_mpt_detour.dgn
DATE = 4/25/2014
TIME = 10:02:32 AM

TABLE OF EASEMENTS

MAP NO.	PARCEL NO.	REPUTED OWNER	ADDRESS	TRN	LIBER	PAGE	TYPE OF TAKE	TAX ACCOUNT	PARCEL SIZE (SF)	PARCEL SIZE (ACRE)	ACQUISITION (SF)	ACQUISITION (ACRE)	% OF TOTAL PARCEL	REMARKS
M67	P1	COUNTY OF MONROE	167 WESTFALL RD	1	1532	407	PE	150.22-1-1	1,045,440	24.00	3,423	0.079	0.33%	
M68	P1	ANTHONY J COSTELLO & SON (SPENCER) DEVELOPMENT, LLC	350 EAST HENRIETTA RD	2	9946	134	PE	150.22-1-2.4	810,652	18.61	32,767	0.752	4.04%	ABSTRACT RECEIVED
M68	P2	ANTHONY J COSTELLO & SON (SPENCER) DEVELOPMENT, LLC	350 EAST HENRIETTA RD	2	9946	134	TE	150.22-1-2.4	810,652	18.61	23,609	0.5419859	2.91%	ABSTRACT RECEIVED
M69	P1	ANNE H. PANKIW	246 WESTFALL RD	3	4892	1	TE	136.78-2-3	3,920	0.09	397	0.009	10.12%	ABSTRACT RECEIVED
M70	P1	RH APARTMENTS, L.P.	380 WESTFALL RD	4	10237	190	TE	136.79-1-5	499,633	11.47	680	0.016	0.14%	ABSTRACT RECEIVED
M70	P2	RH APARTMENTS, L.P.	380 WESTFALL RD	4	10237	190	TE	136.79-1-5	499,633	11.47	307	0.007	0.06%	ABSTRACT RECEIVED
M71	P1	RH APARTMENTS, L.P.	336 WESTFALL RD	5	10237	190	TE	136.78-2-2	373,309	8.57	2,040	0.047	0.55%	ABSTRACT RECEIVED
M72	P1	STEPHEN R BURGART	400 WESTFALL RD	6	8570	284	TE	136.79-1-1	32,234	0.74	492	0.011	1.53%	ABSTRACT RECEIVED
M73	P1	SOUTH WEDGE, INC.	435 WESTFALL RD	7	9748	431	PE	136.79-1-4.2	32,670	0.75	3,334	0.077	10.21%	ABSTRACT RECEIVED
M73	P2	SOUTH WEDGE, INC.	435 WESTFALL RD	7	9748	431	TE	136.79-1-4.2	32,670	0.75	8,182	0.188	25.04%	ABSTRACT RECEIVED
M74	P1	METRO ROCHESTER HOUSING DEVELOPMENT FUND COMPANY	454 WESTFALL RD	8	10609	114	TE	136.79-1-3	347,173	7.97	6,062	0.139	1.75%	ABSTRACT RECEIVED
M75	P1	CASTLE OFFICE GROUP LLC	WESTFALL RD	9	10186	54	PE	149.06-1-2.511	346,302	7.95	23,225	0.533	6.71%	ABSTRACT RECEIVED
M76	P1	ROCHESTER STATE HOSPITAL	620 WESTFALL RD	10	4307	145	PE	136.18-1-1	2,857,536	65.60	12,049	0.277	0.42%	ABSTRACT RECEIVED
M76	P2	ROCHESTER STATE HOSPITAL	620 WESTFALL RD	10	4307	145	TE	136.18-1-1	2,857,536	65.60	8,112	0.186	0.28%	ABSTRACT RECEIVED
M76	P3	ROCHESTER STATE HOSPITAL	620 WESTFALL RD	10	4307	145	PE	136.18-1-1	2,857,536	65.60	2,812	0.065	0.10%	ABSTRACT RECEIVED
M77	P1	WESTFALL PARK DEVELOPMENT COMPANY	465 WESTFALL RD	11	8846	561	PE	149.06-1-5	121,968	2.80	1,873	0.043	1.54%	ABSTRACT RECEIVED
M77	P2	WESTFALL PARK DEVELOPMENT COMPANY	465 WESTFALL RD	11	8846	561	TE	149.06-1-5	121,968	2.80	6,386	0.147	5.24%	ABSTRACT RECEIVED
M78	P1	VA VENTURE ROCHESTER, LLC	465 WESTFALL RD	12	8662	562	PE	136.18-1-4	229,126	5.26	10,501	0.241	4.58%	ABSTRACT RECEIVED
M79	P1	IMOGENE M GILBERT, SUZANNE E. GILBERT, WILLIAM GILBERT, SCOTT	690 WESTFALL RD	13	9873	547	PE	136.19-1-10	43,560	1.00	2,222	0.051	5.10%	ABSTRACT RECEIVED
M80	P1	IF DOG, INC.	720 WESTFALL RD	14	10782	413	PE	136.19-1-11	26,136	0.60	858	0.02	3.28%	ABSTRACT RECEIVED
M81	P1	MARTIN B. GINGRAS	880A WESTFALL ROAD (31.85%)	15	9147	123	PE	136.19-1-44.1	61,257	1.41	1,924	0.044	3.14%	ABSTRACT RECEIVED
		ERIC W. RUCKERT	880B WESTFALL ROAD (12.32%)		6745	114		136.19-1-44.2						
		LOIS A. O'HARA AND ROBERT J. O'HARA	880C WESTFALL ROAD (19.25%)		10682	404		136.19-1-44.3						
		MARIAN CARRACINO	880D WESTFALL ROAD (14.48%)		6994	171		136.19-1-44.4						
		EDWARD D. LEWIS, M.D.	880E WESTFALL ROAD (22.10%)		7379	154		136.19-1-44.5						
M82	P1	JERRY L. MILLER AND ANDREA P. MILLER	890A WESTFALL ROAD (12.93%)	16	10772	186	PE	136.19-1-45.1	51,137	1.17	1,821	0.042	3.56%	ABSTRACT RECEIVED
		ADI & ADI REAL ESTATE, LLC	890B WESTFALL ROAD (11.97%)		10246	88		136.19-1-45.2						
		FRANCIS CONTESTABILE AND KEVIN D. HENRY	890C WESTFALL ROAD (16.73%)		10772	180		136.19-1-45.3						
		ACR REALTY, LLC	890D WESTFALL ROAD (29.53%)		10825	649		136.19-1-45.4						
		O. GREGORY ZAZULAK, M.D	890E WESTFALL ROAD (17.39%)		9182	94		136.19-1-45.5						
		CHARLES W. SOMERVILLE	890F WESTFALL ROAD (11.45%)		10772	175		136.19-1-45.6						
M83	P1	WESTFALL PARK ASSOCIATES	2253 CLINTON AVE S	17	6835	218	PE	136.19-1-59.11	337,154	7.74	3,692	0.085	1.10%	ABSTRACT RECEIVED
M84	P1	ARTHUR F. FELDSOTT	900A WESTFALL ROAD (12.60%)	18	7225	147	PE	136.19-1-47.1	63,771	1.46	7,147	0.164	11.21%	ABSTRACT RECEIVED
		ROCSTAR PROPERTIES, LLC	900B WESTFALL ROAD (20.34%)		10829	236		136.19-1-47.2						
		900C WESTFALL LLC	900C WESTFALL ROAD (51.62%)		10086	396		136.19-1-47.3						
		AVALON REALTY HOLDINGS, LLC	900D WESTFALL ROAD (15.44%)		10479	249		136.19-1-47.4						
M84	P2	ARTHUR F. FELDSOTT	900A WESTFALL ROAD (12.60%)	18	7225	147	TE	136.19-1-47.1	63,771	1.46	5,345	0.123	8.38%	ABSTRACT RECEIVED
		ROCSTAR PROPERTIES, LLC	900B WESTFALL ROAD (20.34%)		10829	236		136.19-1-47.2						
		900C WESTFALL LLC	900C WESTFALL ROAD (51.62%)		10086	396		136.19-1-47.3						
		AVALON REALTY HOLDINGS, LLC	900D WESTFALL ROAD (15.44%)		10479	249		136.19-1-47.4						
M85	P1	AMBROSIA PROPERTIES, LLC	2220 CLINTON AVE S	19	9975	559	TE	136.19-1-48	23,958	0.55	397	0.009	1.66%	ABSTRACT RECEIVED
M86	P1	GENESEE VALLEY ASSOC	979 WESTFALL ROAD	20	8406	652	PE	136.19-1-60.4	116,741	2.68	3,233	0.074	2.77%	ABSTRACT RECEIVED
M87	P1	COMIDA	4901 LAC DE VILLE BL	21	9458	580	PE	136.19-1-61.1	463,043	10.63	1,064	0.024	0.23%	ABSTRACT RECEIVED
M88	P1	ANTHONY J COSTELLO & SON (SPENCER) DEVELOPMENT, LLC	445 WESTFALL ROAD	22	9946	134	PE	136.79-1-4.1	26,299	0.60	6,312	0.145	24.00%	ABSTRACT RECEIVED

MONUMENT DISPOSITION TABLE

MONUMENT ID	MONUMENT NUMBER	CENTER-LINE STATION	OFFSET (FT)	SIDE	DRAWING NUMBER	DESCRIPTION	625.070100MO	625.070200MO	625.070400MO	625.070500MO	626.0X0000MO
							EA	EA	EA	EA	EA
MON-01	TBD	7+83.63	26.74	RT.	PL-1	SET NEW RCS - 4' OFFSET TO N. CORNER OF JOG AT WEST END OF PROJECT	1				
MON-02	136780106	8+83.48	37.3	RT.	PL-1	REMOVE RCS			1		
MON-03	TBD	9+53.05	58.03	RT.	PL-1	SET NEW RCS - 4' OFFSET TO PE INTERSECTION ON ANGLE BISECTOR	1				
MON-04	136780103	10+97.79	37.08	RT.	PL-2	REMOVE RCS			1		
MON-05	TBD	10+90.50	53.28	RT.	PL-2	SET NEW RCS - 4' OFFSET TO INTERSECTION OF PROPOSED PE WITH EXISTING PE	1				
MON-06	136780204	11+71.74	36.37	RT.	PL-2	REMOVE RCS			1		
MON-07	TBD	11+86.66	52.54	RT.	PL-2	SET NEW RCS - 4' OFFSET TO INTERSECTION OF PE TO EAST & SOUTH	1				
MON-08	MCGS MON. 110-1	11+80.40	62.55	RT.	PL-2	INSTALL NEW MONUMENT FRAME AND COVER (MONROE COUNTY MONUMENT)				1	
MON-09	136780202	11+93.39	33.41	LT.	PL-2	INSTALL NEW MONUMENT FRAME AND COVER				1	
MON-10	136780205	12+69.46	36.57	RT.	PL-2	REMOVE RCS			1		
MON-11	TBD	15+09.79	33.27	LT.	PL-3	SET NEW RCS - 4' OFFSET TO HB INTERSECTION NORTH & EAST	1				
MON-12	136780206	15+57.38	9.22	RT.	PL-3	REMOVE RCS			1		
MON-13	TBD	15+30.95	50.72	RT.	PL-3	SET NEW RCS - 5' OFFSET TO PE INTERSECTION AT ANGLE BISECTOR	1				
MON-14	TBD	18+50.00	32.50	RT.	PL-3	SET NEW RCS - 5' OFFSET TO PE INTERSECTION AT ANGLE BISECTOR	1				
MON-15	MC MON. 9175	19+35.70	23.98	LT.	PL-3	INSTALL NEW MONUMENT FRAME AND COVER (MONROE COUNTY MONUMENT)				1	
MON-16	TBD	22+00.00	32.50	RT.	PL-4	SET NEW RCS - 5' OFFSET TO PE INTERSECTION AT ANGLE BISECTOR	1				
MON-17	TBD	22+33.93	27.04	LT.	PL-4	SET NEW RCS - 4' OFFSET TO HB INTERSECTION NORTH & EAST	1				
MON-19	136790102	29+14.14	29.95	LT.	PL-5	INSTALL NEW MONUMENT FRAME AND COVER (MONROE COUNTY MONUMENT)				1	
MON-20	136790101	28+91.41	19.99	RT.	PL-5	REMOVE RCS ON EXIST. HB (PROPOSED CURB)			1		
MON-21	TBD	28+73.23	59.52	RT.	PL-5	SET NEW RCS - ON PE LINE AT CITY LINE	1				
MON-22	TBD	28+56.57	21.18	LT.	PL-5	SET NEW RTS - At NW CORNER- CLEAR VISIBILITY: E, W, & N		1			
MON-23	COUNTY ROW	45+29.26	33.82	LT.	PL-9	INSTALL NEW MONUMENT FRAME AND COVER (MONROE COUNTY MONUMENT)					1
MON-24	TBD	EH 13+70.45	45.42	RT.	PL-16	SET NEW RCS - 4' OFFSET TO PE INTERSECTION AT ANGLE BISECTOR	1				
MON-25	136780208	EH 14+12.81	33.54	RT.	PL-16	REMOVE RCS			1		
						TOTAL	11	1	7	4	1

ITEM NO.	DESCRIPTION
625.070100MO	HORIZONTAL CONTROL SURVEY MONUMENT
625.070200MO	VERTICAL CONTROL SURVEY MONUMENT
625.070400MO	REMOVE EXISTING SURVEY MONUMENT
625.070500MO	INSTALL NEW MONUMENT FRAME AND COVER (CITY)
626.0X0000MO	INSTALL NEW MONUMENT FRAME AND COVER (COUNTY)

TABLE OF PROPERTY RELEASES

PROPERTY OWNER	PROPERTY ADDRESS	TAX ACCOUNT	REASON FOR RELEASE	DRIVEWAY NUMBER	DATE OBTAINED
ISLAMIC CENTER OF ROCHESTER, MOHAMMED ZAFAR, PRESIDENT	727 WESTFALL RD	136.18-1-2.1	DRIVEWAY AND GRADING RELEASE	DWY 12	11/21/2011
TONY A HETTINGER	720 WESTFALL RD	136.19-1-11	DRIVEWAY AND GRADING RELEASE	DWY 13	11/16/2011
PROFESSIONAL OFFICE BUILDING	880A-880E WESTFALL RD	136.19-1-44.1 TO 136.19-1-44.5	DRIVEWAY AND GRADING RELEASE	DWY 17A	11/9/2011
PROFESSIONAL OFFICE BUILDING	890A - 890F WESTFALL RD	136.19-1-45.1 TO 136.19-1-45.6	DRIVEWAY AND GRADING RELEASE	DWY 17B	11/9/2011
AMBROSIA PROPERTIES, LLC	2220 CLINTON AVE S	136.19-1-48	DRIVEWAY AND GRADING RELEASE	DWY 18 DWY 21	11/17/2011

"I hereby certify by my signature and seal below, that I have prepared this record drawing which is, to the best of my knowledge and in my professional opinion, a true representation of the work as constructed on the Westfall Road Improvements Phase III, Project No. 1409."

STATE OF NEW YORK · MATTHEW J. SCIMELA · LICENSED PROFESSIONAL ENGINEER · No. 069983

NO AS-BUILT REVISIONS

NO.	DATE	BY:	REVISION

Barton & Loguidice, P.C.

DRAFTED BY: JMW/JJB

DESGIN BY: JMW

DEPARTMENT OF TRANSPORTATION
50 WEST MAIN STREET, SUITE 6100
ROCHESTER, NEW YORK 14614-1231

UNAUTHORIZED ALTERATION OR ADDITION TO THIS DRAWING IS A VIOLATION OF THE NEW YORK STATE EDUCATION LAW ARTICLE 145, SECTION 7209

PROJECT NAME: WESTFALL ROAD
LIMITS: E. HENRIETTA ROAD TO LAC-DE-VILLE BLVD
TOWN: BRIGHTON
CITY: ROCHESTER
CAPITAL PROJECT NO.: 4753.77
BRIDGE IDENTIFICATION NO.: N.A.

MISCELLANEOUS TABLES

SCALE: NO SCALE
DATE ISSUED: 4/25/2014
DRAWING NO. MT-1
SHEET NO. 28 OF 112

mek
I:\MicroStation\Workspace\PLOT\NYSDOT\NYSDOT_SIZE_B.TBL
I:\MicroStation\Workspace\Plot\NYSDOT\NYSDOT_HPLJ5200_B.plt

FILE NAME = I:\Shared\1000\1066005\AS-BUILTS\1066005_mt_01.dgn
DATE = 4/25/2014
TIME = 10:03:18 AM

mek
I:\MicroStation\Workspace\PLOT\NYSDOT\NYSDOT_SIZE_B.TBL
I:\MicroStation\Workspace\Plot\NYSDOT\NYSDOT_HPLJ5200_B.plt

TABLE OF DRIVEWAYS (1)

DWY NO.	STATION	SIDE	ADDRESS	DRIVEWAY LENGTH	DRIVEWAY WIDTH	LENGTH OF DROP CURB	APRON LENGTH	DRIVEWAY MATERIAL	DRIVEWAY TYPE	USE	REMARKS
1	08+13.3	LT.	184 WESTFALL	-	15.0	15.0	5.3	-	CITY 1	RESIDENTIAL	
2	09+27.4	LT.	200 WESTFALL	-	20.0	20.0	5	-	CITY 1	RESIDENTIAL	
3	10+10.0	LT.	335 E. HENRIETTA	-	39.0	39.0	5	-	CITY 2	COMMERCIAL	
4	12+77.6	LT.	246 WESTFALL	11.0	15.0	15.0	6	ASPHALT	CITY 1	RESIDENTIAL	DRIVEWAY WIDTH VARIES, MATCH EXISTING
8	24+45.0	LT.	400 WESTFALL	3.8	15.0	15.0	6	ASPHALT	CITY 1	RESIDENTIAL	DRIVEWAY WIDTH VARIES, MATCH EXISTING
9	25+39.8	LT.	420 WESTFALL	4.5	32.0	32.0	7	ASPHALT	CITY 2	COMMERCIAL	DRIVEWAY WIDTH VARIES, MATCH EXISTING
10a	25+05.0	RT.	435 WESTFALL	7.5	12.0	12.0	7	ASPHALT	CITY 2	COMMERCIAL	
10b	26+05.0	RT.	435 WESTFALL	7.5	12.0	12.0	7	ASPHALT	CITY 2	COMMERCIAL	
DWY NO.	**STATION**	**SIDE**	**ADDRESS**	**PAVEMENT LENGTH ("PL")**	**DRIVEWAY WIDTH ("W")**	**LENGTH OF DROP CURB**	**APRON LENGTH (NOTE 1)**	**DRIVEWAY MATERIAL (NOTE 1)**	**NYSDOT DRIVEWAY TYPE**	**USE**	**REMARKS**
11	46+27.2	LT.	690 WESTFALL	14.0	20.0	~~39.0~~ *29.3*	-	-	TYPE 4	RESIDENTIAL	
12	48+30.0	RT.	727 WESTFALL	~~30.0~~ *31.6*	~~32.5~~ *32.0*	-	-	-	TYPE 2	COMMERCIAL	
13	48+70.4	LT.	720 WESTFALL	17.0	21.0	31.0	-	-	TYPE 4	RESIDENTIAL	
14	52+80.0	RT.	777 WESTFALL	30.0	~~24.0~~ *24.7*	-	-	-	TYPE 2	COMMERCIAL	WEST RADIUS = 20.0'
15	53+00.5	LT.	0 WESTFALL	8.3	16.0	31.4	-	-	TYPE 3	RESIDENTIAL	WIDTH AT SIDEWALK = 19.5'
16	57+04.5	RT.	2253 WESTFALL	20.0	~~24.0~~ *24.3*	-	-	-	TYPE 2	COMMERCIAL	RADII = 20.0', TANGENT WITH PAVEMENT EDGE
17	57+09.8	LT.	880A-880E WESTFALL	47.5	37.0	-	-	-	TYPE 2	COMMERCIAL	
18	65+26.4	LT.	940 WESTFALL	30.2	30.0	49.3	-	-	TYPE 1	COMMERCIAL	WEST RADIUS = 25.0', EAST RADIUS = 15.0'
19	66+22.7	RT.	919 WESTFALL	30.1	26.0	-	-	-	TYPE 2	COMMERCIAL	RADII = 25.0'
20	68+52.6	LT.	980 WESTFALL	13.4	24.5	42.4	-		TYPE 3	COMMERCIAL	LAYOUT LINE = HIGHWAY BOUNDARY
21	SC 13+55.1	RT.	2220 S. CLINTON	7.4	16.0	32.5	-	-	NYSDOT	COMMERCIAL	WIDTH AT SIDEWALK = 22.6'
11A	*46+75*	*LT.*	*690 WESTFALL*	*5.0*	*18.0*	*18.0*	*—*	*—*	*TYPE 4*	*RESIDENTIAL*	*ADD BY PERMIT #12-791*

NOTES: 1) REFER TO NYSDOT STANDARD SHEETS FOR LAYOUT AND MATERIALS.
2) TRANSITION CURB SHALL BE TYPE C GRANITE (REFER TO DWG. MD-2 FOR TRANSITION CURB DETAIL)

TREE PROTECTION TABLE

CENTERLINE STATION	OFFSET (FT)	SIDE	615.04020008 (LF)
7+86.00	25.7	LT.	60
8+31.91	38.3	RT.	60
8+67.19	43.2	RT.	60
8+95.97	52.8	RT.	60
10+51.40	39.0	LT.	60
10+70.40	39.9	LT.	60
10+83.89	39.6	LT.	60
10+97.57	50.0	LT.	60
11+90.05	312.8	RT.	60
11+90.54	57.8	RT.	60
11+90.91	292.7	RT.	60
12+16.73	54.2	RT.	60
13+44.67	41.3	LT.	60
13+73.73	41.4	LT.	60
14+09.47	41.0	LT.	60
15+31.14	41.0	LT.	60
15+71.69	40.8	LT.	60
16+07.50	40.7	LT.	60
16+69.76	40.1	LT.	60
17+12.28	40.9	LT.	60
17+44.33	38.3	LT.	60
17+44.33	38.3	LT.	60
17+74.66	39.6	LT.	60
18+00.91	38.5	LT.	60
18+80.93	38.1	LT.	60
19+11.41	37.9	LT.	60
19+32.01	37.7	LT.	60
19+66.06	37.3	LT.	60
20+01.43	37.5	LT.	60
20+36.63	36.1	LT.	60
20+76.96	36.1	LT.	60
21+17.98	36.3	LT.	60
21+57.86	35.7	LT.	60
22+52.14	34.7	LT.	60
23+33.65	34.7	LT.	60
23+72.39	35.1	LT.	60
28+60.40	43.3	LT.	60
30+60.24	50.0	LT.	60
30+90.80	54.1	RT.	60
31+64.71	49.6	LT.	60
38+14.94	48.4	RT.	60
40+11.12	68.4	RT.	60
42+14.75	52.0	LT.	60
42+99.16	53.2	RT.	60
45+39.36	46.9	RT.	60
51+64.20	38.5	RT.	60
59+54.28	43.4	LT.	60
59+96.14	44.7	LT.	60
61+51.63	46.0	LT.	60
63+45.10	48.7	LT.	60
		TOTAL	3000

TREE REMOVAL TABLE

CENTERLINE STATION	OFFSET	SIDE	TYPE	614.0324 (EA)	614.0334 (EA)	614.0344 (EA)	614.0354 (EA)	614.0364 (EA)
9+02.67	39.5	RT.	24" SYCAMORE			1		
9+63.15	39.8	RT.	24" SYCAMORE			1		
10+18.27	39.8	RT.	32" SYCAMORE				1	
11+02.46	49.3	RT.	32" ELM				1	
12+02.00	43.3	RT.	12" CRABAPPLE	1				
12+18.13	43.8	RT.	10" CRABAPPLE	1				
13+21.50	39.5	RT.	20" BASSWOOD			1		
13+82.19	33.5	RT.	20" BASSWOOD			1		
25+23.74	68.0	RT.	14" ASH		1			
26+61.16	27.8	RT.	24" MAPLE			1		
26+80.14	28.7	RT.	18" MAPLE		1			
28+63.36	20.3	RT.	14" CHINESE ELM		1			
28+65.78	21.6	RT.	18" CHINESE ELM		1			
28+70.58	17.7	RT.	14" CHINESE ELM		1			
29+20.70	50.1	LT.	12" MAPLE	1				
29+97.95	25.9	RT.	18" CHINESE ELM		1			
30+21.86	43.3	RT.	12" CHINESE ELM	1				
30+31.76	24.7	RT.	12" BOX ELDER	1				
30+54.21	23.5	RT.	14" CHINESE ELM		1			
30+55.87	20.6	RT.	10" CHINESE ELM	1				
30+62.57	21.4	RT.	10" CHINESE ELM	1				
30+62.99	24.7	RT.	8" CHINESE ELM	1				
30+76.44	23.2	RT.	36" CHINESE ELM				1	
32+69.43	20.1	RT.	20" CHINESE ELM			1		
32+86.91	19.3	RT.	16" CHINESE ELM		1			
37+40.04	42.3	RT.	8" LOCUST	1				
41+78.49	51.3	LT.	12" MAPLE	1				
57+62.82	39.4	LT.	42" ELM					1
58+14.02	38.6	LT.	27" MAPLE				1	
58+56.05	37.4	LT.	24" MAPLE			1		
59+16.64	35.6	LT.	30" MAPLE				1	
59+55.00	43.0	LT.	20" ASH			1		
59+73.96	39.7	LT.	15" MAPLE		1			
59+96.00	45.0	LT.	8" ASH	1				
60+20.02	35.5	LT.	15" SPRUCE		1			
60+41.31	41.6	LT.	12" ASH	1				
60+59.53	31.4	LT.	12" SPRUCE	1				
60+85.08	42.8	LT.	15" ASH		1			
61+05.99	29.5	LT.	16" SPRUCE		1			
61+22.61	40.1	LT.	12" SPRUCE	1				
61+78.00	55.0	LT.	16" SPRUCE		1			
61+81.00	40.0	LT.	16" SPRUCE		1			
61+82.00	30.0	LT.	16" SPRUCE		1			
62+32.96	43.9	LT.	17" TULIP POPLAR		1			
63+99.80	23.4	LT.	20" MAPLE			1		
64+22.38	22.3	LT.	18" MAPLE		1			
64+43.36	22.5	LT.	18" MAPLE		1			
64+63.60	23.3	LT.	12" MAPLE	1				
			TOTAL:	**15**	**18**	**9**	**5**	**1**

ITEM 614.0324 - TREE REMOVAL OVER 6" TO 12" DIAM. STUMP GRUBBED
ITEM 614.0334 - TREE REMOVAL OVER 12" TO 18" DIAM. STUMP GRUBBED
ITEM 614.0344 - TREE REMOVAL OVER 18" TO 24" DIAM. STUMP GRUBBED
ITEM 614.0354 - TREE REMOVAL OVER 24" TO 36" DIAM. STUMP GRUBBED
ITEM 614.0364 - TREE REMOVAL OVER 36" TO 48" DIAM. STUMP GRUBBED

TABLE OF UNDERDRAIN PIPE (1)

CENTERLINE STATION FROM	CENTERLINE STATION TO	SIDE	DRAIN FROM	DRAIN TO	ITEM 605.1502 FT	TRENCH DIMENSIONS (FT) WIDTH	TRENCH DIMENSIONS (FT) DEPTH	ITEM 206.02 CY	ITEM 605.0901 CY
10+96 ~~11+10~~	08+67	RT.	E. HENRIETTA RD.	DS 101	*229* ~~243.2~~	1.5	1.0	13.5	~~11.7~~ *13.5*
12+96	11+95	RT.	DS 105	DS 104	101.0	1.5	1.0	5.6	~~4.9~~ *5.6*
14+00	12+96	RT.	DS 107	DS 105	103.8	1.5	1.0	5.8	~~5.0~~ *5.8*
16+00	14+00	RT.	DS 112	DS 107	199.9	1.5	1.0	11.1	9.7
18+00	16+00	RT.	DS 115	DS 112	200.4	1.5	1.0	11.1	9.7
18+00	18+00	RT.	HIGH POINT	DS 115	*188* ~~0.2~~	1.5	1.0	~~0.0~~ *10.4*	~~0.0~~ *9.1*
19+88	21+70	RT.	HIGH POINT	DS 119	182.0	1.5	1.0	10.1	8.8
21+70	23+96	RT.	DS 119	DS 123	225.5	1.5	1.0	12.5	10.9
23+96	25+97	RT.	DS 123	DS 125	201.5	1.5	1.0	11.2	9.7
25+97	27+98	RT.	DS 125	DS 128	201.0	1.5	1.0	11.2	9.7
27+98	30+00	RT.	DS 128	DS 135	202.0	1.5	1.0	11.2	9.8
44+00	46+00	RT.	DS 157	DS 160	200.2	1.5	1.0	11.1	9.7
08+67	11+10	LT.	E. HENRIETTA RD.	EX 101	243.0	1.5	1.0	13.5	11.7
14+00	11+95	LT.	DS 106	DS 103	205.1	1.5	1.0	11.4	9.9
16+00	14+00	LT.	DS 111	DS 106	200.6	1.5	1.0	11.1	9.7
18+00	16+00	LT.	DS 114	DS 111	199.7	1.5	1.0	11.1	9.6
18+00	18+00	LT.	HIGH POINT	DS 114	0.0	1.5	1.0	0.0	0.0
19+88	21+69	LT.	HIGH POINT	DS 118	181.2	1.5	1.0	10.1	8.7
21+69	24+00	LT.	DS 118	DS 124	230.9	1.5	1.0	12.8	11.1
24+00	26+00	LT.	DS 124	DS 126	199.9	1.5	1.0	11.1	9.7
26+00	28+00	LT.	DS 126	DS 129	200.0	1.5	1.0	11.1	9.7
28+00	28+79	LT.	DS 129	DS 130	78.8	1.5	1.0	4.4	3.8
30+00	30+00	LT.	29+25	DS 134	0.0	1.5	1.0	0.0	0.0
30+00	32+00	LT.	DS 134	DS 137	200.2	1.5	1.0	11.1	9.7
32+00	34+23	LT.	DS 137	DS 139	222.9	1.5	1.0	12.4	10.8
34+23	36+00	LT.	DS 139	DS 142	176.7	1.5	1.0	9.8	8.5
36+00	38+00	LT.	DS 142	DS 144	200.2	1.5	1.0	11.1	9.7
38+00	39+27	LT.	DS 144	DS 147	126.8	1.5	1.0	7.0	6.1
39+27	41+32	LT.	DS 147	DS 149	205.2	1.5	1.0	11.4	9.9
41+32	42+49	LT.	DS 149	DS 154	117.3	1.5	1.0	6.5	5.7
42+49	44+00	LT.	DS 154	DS 156	150.6	1.5	1.0	8.4	7.3
44+00	46+00	LT.	DS 156	DS 159	200.3	1.5	1.0	11.1	9.7
46+00	48+00	LT.	DS 159	DS 162	199.6	1.5	1.0	11.1	9.6
48+00	49+66	LT.	DS 162	DS 164	166.3	1.5	1.0	9.2	8.0
49+66	51+67	LT.	DS 164	DS 166	200.5	1.5	1.0	11.1	9.7
53+68	51+67	LT.	DS 171	DS 166	201.0	1.5	1.0	11.2	9.7
55+68	53+68	LT.	DS 173	DS 171	200.3	1.5	1.0	11.1	9.7
57+54	55+68	LT.	DS 175	DS 173	186.1	1.5	1.0	10.3	9.0
59+51	57+54	LT.	DS 178	DS 175	196.7	1.5	1.0	10.9	9.5
61+50	59+51	LT.	DS 180	DS 178	199.4	1.5	1.0	11.1	9.6
70+15	72+09	LT.	DS 198	DS 200	193.2	1.5	1.0	10.7	9.3
EH 15+15	EH 13+80	RT.	DS 104	DS 208	135.0	1.5	1.0	7.5	6.5
EH 13+80	EH 12+00	RT.	DS 208	DS 206	180.0	1.5	1.0	10.0	8.7
SC 10+75	SC 11+23	RT.	SC 10+75	DS 186	48.0	1.5	1.0	2.7	2.3
SC 11+20	SC 11+80	RT.	DS 186	DS 191	60.0	1.5	1.0	3.3	2.9
SC 14+00	SC 12+85	RT.	SC 14+00	DS 189	115.0	1.5	1.0	6.4	5.6
SC 10+75	SC 11+20	LT.	SC 10+75	DS 184	*25* ~~45.0~~	1.5	1.0	~~2.5~~ *1.4*	~~2.2~~ *1.4*
30+30 ~~29+30~~	38+60	LT.	BIORETENTION AND DRY SWALE		~~930.0~~	2.0	2.0	137.8	27.7
35+65 ~~35+45~~	41+20	~~LT.~~	BIORETENTION AND DRY SWALE		*555* ~~575.0~~	2.0	2.0	85.2	17.1
		RT.							
				TOTAL	9231			652	~~418~~ *652*

TABLE OF CONCRETE GUTTER

CENTERLINE STATION FROM	CENTERLINE STATION TO	SIDE	624.01 (FT)
GW 10+35.0	GW 10+60.0	RT.	25.0
GW 10+35.0	GW 10+60.0	LT.	25.0
GE 10+30.0	GE 10+60.0	RT.	30.0
GE 10+30.0	GE 10+60.0	LT.	30.0
ME 10+29.0	ME 11+16.0	RT.	87.0
ME 10+25.0	ME 11+16.0	LT.	91.0
		TOTAL	288

ITEM 624.01 - CONCRETE GUTTER

"I hereby certify by my signature and seal below, that I have prepared this record drawing which is, to the best of my knowledge and in my professional opinion, a true representation of the work as constructed on the Westfall Road Improvements Phase III, Project No. 1409."

NO.	DATE	BY:	REVISION
1	10/13	JBR	TABLE OF UNDERDRAAIN PIPE AND TABLE OF DRIVEWAYS

Barton & Loguidice, P.C.
DESGIN BY: JMW
DRAFTED BY: JMW/JJB

DEPARTMENT OF TRANSPORTATION
50 WEST MAIN STREET, SUITE 6100
ROCHESTER, NEW YORK 14614-1231

UNAUTHORIZED ALTERATION OR ADDITION TO THIS DRAWING IS A VIOLATION OF THE NEW YORK STATE EDUCATION LAW ARTICLE 145, SECTION 7209

PROJECT NAME: WESTFALL ROAD
LIMITS: E. HENRIETTA ROAD TO LAC-DE-VILLE BLVD
TOWN: BRIGHTON
CITY: ROCHESTER
CAPITAL PROJECT NO.: 4753.77
BRIDGE IDENTIFICATION NO.: N.A.

MISCELLANEOUS TABLES

SCALE: NO SCALE
DATE ISSUED: 4/25/2014
DRAWING NO. MT-2
SHEET NO. 27 OF 112

FILE NAME = I:\Shared\1000\1066005\AS-BUILTS\1066005_mt_02.dgn
DATE = 4/25/2014
TIME = 10:03:53 AM

mek
I:\MicroStation\Workspace\PLOT\NYSDOT\NYSDOT_SIZE_B.TBL
I:\MicroStation\Workspace\Plot\NYSDOT\NYSDOT_HPLJ5200_B.plt

WATER MAIN TABLE (1)

MONROE COUNTY WATER AUTHORITY

WM NO.	CENTERLINE STATION	DESCRIPTION	203.07	203.25	206.02	663.0104	663.0106	663.0108	663.0116	663.0604	663.0607	663.1004	663.1006	663.1008	663.1303	663.160606	663.2001	663.2002	663.2304	663.2306	663.2308	663.2316	663.2504	~~633.2507~~ 663.2507	663.34	663.40	663.46
			CY	CY	CY	LF	LF	LF	LF	LF	LF	EA	EA	EA	EA	EA	LB	LB	LF	LF	LF	LF	EA	EA	EA	EA	EA
B1	49+94.0	REMOVE AND STORE EXISTING HYDRANT																									1
B2	55+75.9	REMOVE AND STORE EXISTING HYDRANT																									1
B3	~~56+75.2~~ 56+57	NEW 2" SERVICE TO EXISTING 12" MAIN	19.0	14.0	43.5						105.0													1			
B4	58+73.0	NEW 2" SERVICE TO NEW 6" (SEE WM-B5 DETAIL ON DWG. MD-11)	2.7	2.0	6.2						15.0													1			
B5	59+32.0	CONNECT NEW 6" MAIN TO EXISTING 6" (SEE WM-B5 DETAIL ON DWG. MD-11)					15.0						1				5			15						1	
B6	-	NEW 6" DI WATER MAIN	103.1	88.1	252.1		495.0										10			495.0							
B7	60+40.0	TRANSFER 16" CROSSING TO NEW 6" MAIN (SEE WM-B7 DETAIL ON DWG. MD-11)	4.2	4.5	11.7				15.0				1					10				15.0				2	
B8	66+33.1	NEW 2" SERVICE TO NEW 6" MAIN	2.7	2.0	6.2						15.0													1			
B11	62+18.5	ADJUST EXISTING HYDRANT ELEVATION																							1		
B13	62+74.0	CONNECT NEW 8" MAIN TO EXISTING 6" MAIN (SEE WM-B13 DETAIL ON DWG. MD-11)											1				5									1	
B14	62+72.0	CONNECT NEW 6" MAIN TO EXISTING 6" MAIN (SEE WM-B14 DETAIL ON DWG. MD-11)														1	5										
B15.0	-	NEW 8" DI WATER MAIN	181.1	163.9	456.1			815.0									15				815.0						
B15.1	64+60+/-	NEW 1" SERVICE TO NEW 8" MAIN	3.5	2.4	7.8					20.0													1				
B15.2	67+76.0	NEW 8" RESILIENT WEDGE VALVE & VALVE BOX												1													
B16	67+85.7	NEW 2" SERVICE TO NEW 8" MAIN	1.8	1.3	4.1						10.0													1			
B17	67+91.2	NEW 4" SERVICE TO NEW 8" MAIN	1.9	1.6	4.6	10.0						1					5		10.0								
B18	68+36.5	NEW 6" SERVICE TO NEW 8" MAIN	2.1	1.8	5.1		10.0						1				5			10.0							
B19	68+93.8	NEW 4" SERVICE TO NEW 8" MAIN	1.9	1.6	4.6	10.0						1					5		10.0								
B20	68+99.0	NEW 2" SERVICE TO NEW 8" MAIN	1.8	1.3	4.1						10.0													1			
B21	69+12.5	REMOVE AND STORE EXISTING HYDRANT AND INSTALL NEW HYDRANT	4.2	3.6	10.2		20.0						1		1					20.0							1
B22	70+17.2	CONNECT NEW 8" MAIN TO EXISTING 8" MAIN															5									1	
B23	69+34.0	NEW 8" RESILIENT WEDGE VALVE & VALVE BOX												1													
		TOTAL	330.0	287.9	816.5	20.0	540.0	815.0	15.0	20.0	155.0	2	5	2	1	1	60.0	10.0	20.0	540.0	815.0	15.0	1	5	1	5	3

ITEM NO.	DESCRIPTION	ITEM NO.	DESCRIPTION
203.07	SELECT GRANULAR FILL	663.160606	TAPPING SLEEVE, VALVE & VALVE BOX ASSEMBLY, 6" X 6"
203.25	SAND BACKFILL	663.2001	IRON WATER MAIN FITTINGS (3-8 INCH DIAMETER)
663.0104	DUCTILE IRON CEMENT LINED WATER PIPE 4"	664.2002	IRON WATER MAIN FITTINGS (10-16 INCH DIAMETER)
663.0106	DUCTILE IRON CEMENT LINED WATER PIPE 6"	663.2304	POLYETHYLENE ENCASEMENT FOR WATER PIPE, 4"
663.0108	DUCTILE IRON CEMENT LINED WATER PIPE 8"	663.2306	POLYETHYLENE ENCASEMENT FOR WATER PIPE, 6"
664.0116	DUCTILE IRON CEMENT LINED WATER PIPE 16"	663.2308	POLYETHYLENE ENCASEMENT FOR WATER PIPE, 8"
663.0604	1" COPPER WATER SERVICE PIPE	663.2316	POLYETHYLENE ENCASEMENT FOR WATER PIPE, 16"
663.0607	2" COPPER WATER SERVICE PIPE	663.2504	WATER SERVICE CONNECTION - 1"
663.1004	RESILIENT WEDGE VALVE & VALVE BOX, 4"	663.2507	WATER SERVICE CONNECTION - 2"
663.1006	RESILIENT WEDGE VALVE & VALVE BOX, 6"	663.34	ADJUST EXISTING HYDRANT ELEVATION
663.1008	RESILIENT WEDGE VALVE & VALVE BOX, 8"	663.40	DISCONNECT AND CAP EXISTING WATER MAIN
663.13nn	HYDRANT	663.46	REMOVE AND STORE EXISTING HYDRANT

WATER VALVE DISPOSITION TABLE

MONROE COUNTY WATER AUTHORITY

CENTERLINE STATION	OFFSET (FT.)	SIDE	663.33	663.42
			EA	EA
49+97.34	32.20	LT.		1
53+27.83	28.08	LT.		1
53+92.85	49.35	LT.		1
55+70.98	23.25	LT.		1
59+30.39	35.79	RT.	1	
60+35.01	29.35	RT.	1	
60+41.65	22.62	LT.		1
62+16.22	45.58	RT.	1	
62+56.20	16.95	LT.	1	
62+72.46	52.59	LT.	1	
63+15.56	29.83	LT.	1	
67+92.20	15.01	LT.		1
68+37.78	16.22	LT.		1
68+95.31	17.31	LT.		1
69+13.14	15.79	LT.		1
		TOTAL	6	9

ITEM NO.	DESCRIPTION
663.33	ADJUST EXISTING VALVE BOX ELEVATION
663.42	REMOVE AND DISPOSE OF EXISTING WATER VALVE & VALVE BOX

63+29	28	LT.		1
63+30	28	LT.		1

(1)

WATER MAIN TABLE (1)

CITY WATER BUREAU

WM NO.	CENTERLINE STATION	OFFSET (FT.)	SIDE	DESCRIPTION	203.07	203.25	206.02	663.0106	663.0607	663.1301	663.1302	663.160612	663.2306	663.2507	663.2607	663.34
					CY	CY	CY	LF	LF	EA	EA	EA	LF	EA	EA	EA
A1	22+57.0	21.1	LT.	ADJUST HYDRANT ELEVATION												1
A2	24+90.9	22.0	LT.	PROVIDE NEW HYDRANT AND BRANCH VALVE AND REMOVE EXISTING HYDRANT	3.1	3.3	6.9	12.0		1		1	12.0			
A3	26+73.0	-	-	NEW 2" COPPER WATER MAIN SERVICE	8.7	6.4	~~21.8~~		48.0					1		
A4	26+71.6	28.2	RT.	NEW CURB STOP AND BOX			14.1								1	
A5	28+50.0	27.2	LT.	PROVIDE NEW HYDRANT AND BRANCH VALVE AND REMOVE EXISTING HYDRANT	3.1	3.3	6.9	12.0			1	1	12.0			
				TOTAL	14.9	13.0	35.6	24.0	48.0	1	1	2	24.0	1	1	1

ITEM NO.	DESCRIPTION
663.0106	DUCTILE IRON CEMENT LINED WATER PIPE 6"
663.0607	2" COPPER WATER SERVICE PIPE
663.13nn	NEW HYDRANT (INCLUDING REMOVAL OF EXISTING HYDRANT)
663.160612	TAPPING SLEEVE, VALVE, & VALVE BOX ASSEMBLY, 6"X12"
663.2306	POLYETHYLENE ENCASEMENT FOR WATER PIPE, 6"
663.2507	WATER SERVICE CONNECTION - 2"
663.2607	CURB STOP & CURB BOX, 2"
663.34	ADJUST EXISTING HYDRANT ELEVATION

(1) WATER VALVE DISPOSITION TABLE

CITY WATER BUREAU

CENTERLINE STATION	OFFSET (FT.)	SIDE	663.20020004	663.2603	663.33	663.45	663.47	663.42
			EA	EA	EA	EA	EA	
10+54.3	19.9	LT.			2			
10+58.3	28.7	LT.		1			1	
11+04.8	19.4	LT.			2			
11+08.3	8.8	LT.			2			
11+24.9	5.0	LT.			2			
11+50.0	44.0	LT.			2			
11+91.6	22.4	LT.			~~2~~ 1			
12+43.2	23.8	LT.			2			
13+03.3	28.7	LT.		1			1	
14+88.1	28.9	LT.			2			
15+32.9	22.8	LT.			2			
15+53.2	21.2	LT.			~~2~~ 1			
18+46.4	21.8	LT.			~~2~~ 1			
18+51.0	20.9	LT.			2			
18+95.4	19.2	LT.			~~2~~ 1			
22+15.5	28.8	LT.			~~2~~ 1			
22+49.0	17.4	LT.			2			
22+62.8	16.0	LT.			~~2~~ 1			
24+84.0	21.4	LT.		1			1	
25+69.2	17.6	LT.			~~2~~			1
25+75.6	17.0	LT.	2			1		
26+73.0	13.9	RT.					1	
28+63.7	19.0	LT.			~~2~~ 1			1
28+94.5	16.6	LT.	2			1		
29+03.2	15.9	LT.			~~2~~ 1			
29+20.3	16.7	LT.			~~2~~ 1			
29+28.9	21.3	LT.			~~2~~ 1			
		TOTAL	4	3	42	2	4	
					30			2

ITEM NO.	DESCRIPTION
663.20020004	32 POUND MAGNESIUM ANNODE
663.2603	CURB STOP AND CURB BOX, 3/4"
663.33	ADJUST EXISTING VALVE BOX ELEVATION
663.45	REMOVE AND STORE EXISTING VALVE BOX
663.47	REMOVE AND STORE EXISTING CURB STOP & CURB BOX
663.42	REMOVE AND DISPOSE EXISTING WATER VALVE BOX

TABLE OF GRANITE CURB

CENTERLINE STATION FROM	CENTERLINE STATION TO	SIDE	609.0203 (FT)	609.15 (FT)
07+35.0	10+77.5	RT.	343	
12+03.0	19+01.0	RT.	718	
19+57.0	34+24.7	RT.	1468	
35+73.7	41+39.5	RT.	565	
42+65.7	47+75.0	RT.	510	
47+75.0	47+94.3	RT.		20
47+93.4	48+68.6	RT.	74	
48+68.6	52+56.5	RT.		388
52+56.5	53+09.8	RT.	67	
53+09.8	56+75.0	RT.		366
56+75.0	57+36.7	RT.	60	
57+36.7	61+95.5	RT.		460
63+42.8	65+94.8	RT.		252
65+94.8	66+47.2	RT.	70	
66+47.2	75+37.0	RT.		890
07+62.2	10+87.8	LT.		327
11+92.4	14+61.2	LT.		286
14+98.6	21+86.2	LT.	720	
22+22.8	28+78.3	LT.	680	
29+06.6	41+28.2	LT.	1240	
42+53.1	47+50 ~~47+75.0~~	LT.	~~522~~ 497	
47+75.0	56+78.8	LT.		906
56+78.8	57+59.4	LT.	106	
59+59.4	62+02.1	LT.		245
63+53.0	75+75.0	LT.		1225
EH 11+40.0	EH 14+80.4	RT.		342
EH 14+80.4	EH 15+09.9	RT.	46	
EH 15+74.7	EH 16+08.2	RT.	52	
EH 14+49.1	EH 15+08.9	LT.	77	
EH 15+83.9	EH 16+09.5	LT.	42	
SGE 10+50.0	SGE 12+05.5	RT.	94	115
SGE 10+50.0	SGE 11+93.7	LT.	70	100
SGE 11+72.0	SGE 12+05.2	ISLAND	~~167~~ 175	
SG 10+50.0	SG 11+10.0	RT.	70	16
SG 10+50.0	SG 10+98.8	LT.	75	
DDSO 10+20.4	DDSO 10+70.0	RT.	75	
DDSO 10+19.2	DDSO 12+04.8	LT.	70	146
SC 10+71.0	SC 11+80.8	RT.	91	46
SC 12+54.4	SC 14+00.0	RT.	64	51
SC 10+71.0	SC 11+52.3	LT.	110	
SC 12+09.0	SC 14+00.0	LT.	83	131
435 WESTFALL ROAD			78	
		TOTAL	8407	6312

TABLE OF SANITARY SEWER STRUCTURES

STRUCTURE NUMBER	CENTERLINE STATION	OFFSET (FT.)	SIDE	RIM ELEVATION (FT.)	604.10	655.05010010
					EA	EA
SA 101	7+62.0	14.2	LT.	568.24	1	1
SA 102	11+23.4	12.6	LT.	572.84	1	1
SA 103	11+34.9	16.1	LT.	573.14	1	1
SA 104	11+86.0	11.6	LT.	573.36	1	1
SA 105	14+41.8	11.0	LT.	575.16	1	1
SA 106	17+42.8	8.5	LT.	577.13	1	1
SA 107	19+66.6	5.8	LT.	578.60	1	1
SA 108	21+89.9	4.0	LT.	575.14	1	1
SA 109	24+69.0	16.3	RT.	567.18	1	1
SA 110	24+75.7	31.1	LT.	568.67	-	1
SA 111	26+47.1	13.9	RT.	563.03	1	1
SA 112	29+35.4	34.8	RT.	549.66	-	1
SA 113	32+39.6	35.6	RT.	531.61	-	1
					10	13

ITEM 604.10 - PREFABRICATED ADJUSTMENT RINGS FOR MANHOLES

ITEM 655.05010010 - RESETTING EXISTING SANITARY MANHOLE CASTINGS

NOTE 1: RIMS SHALL BE SET TO BINDER GRADE AS REQUIRED FOR THE WINTER SHUTDOWN PERIOD.
FINAL RIM ELEVATION TO BE ACHIEVED WITH ADJUSTMENT RINGS AS NECESSARY.

"I hereby certify by my signature and seal below, that I have prepared this record drawing which is, to the best of my knowledge and in my professional opinion, a true representation of the work as constructed on the Westfall Road Improvements Phase III, Project No. 1409."

STATE OF NEW YORK · MATTHEW J. SCHOOLEY · LICENSED PROFESSIONAL ENGINEER · No. 069983

NO.	DATE	BY:	REVISION
1	10/13	JBR	REVISED TABLES

Barton & Loguidice, P.C.

DESGIN BY: JMW

DRAFTED BY: JMW/JJB

DEPARTMENT OF TRANSPORTATION
50 WEST MAIN STREET, SUITE 6100
ROCHESTER, NEW YORK 14614-1231

UNAUTHORIZED ALTERATION OR ADDITION TO THIS DRAWING IS A VIOLATION OF THE NEW YORK STATE EDUCATION LAW ARTICLE 145, SECTION 7209

PROJECT NAME: WESTFALL ROAD
LIMITS: E. HENRIETTA ROAD TO LAC-DE-VILLE BLVD
TOWN: BRIGHTON
CITY: ROCHESTER
CAPITAL PROJECT NO.: 4753.77
BRIDGE IDENTIFICATION NO.: N.A.

MISCELLANEOUS TABLES

SCALE: NO SCALE

DATE ISSUED: 4/25/2014

DRAWING NO. MT-3

SHEET NO. 28 OF 112

FILE NAME = I:\Shared\1000\1066005\AS-BUILTS\1066005_mt_03.dgn
DATE = 4/25/2014
TIME = 10:04:21 AM

mek
I:\MicroStation\Workspace\PLOT\NYSDOT\NYSDOT_SIZE_B.TBL
I:\MicroStation\Workspace\Plot\NYSDOT\NYSDOT_HPLJ5200_B.plt

FILE NAME = I:\Shared\1000\1066005\AS-BUILTS\1066005_dt_01.dgn
DATE = 4/25/2014
TIME = 10:05:12 AM

DRAINAGE STRUCTURE TABLE

STRUCTURE NUMBER	CENTERLINE STATION	OFFSET (FT)	SIDE	STRUCTURE TYPE	FRAME & GRATE	DESCRIPTION (revision 1)	RIM ELEV. (FT)	INVERT ELEV (FT)	203.07 CY	206.02 CY	603.171216 EA	603.171316 EA	PROPOSED 8" PVC 603.17143001 603.98100804 EA	603.98100604 FT	603.98101204 FT	603.98101804 FT	604.10 EA	604.11 EA	604.300211 FT	604.300311 FT	604.300611 FT	604.301911 FT	604.4048 FT	604.500401 FT	604.070401 EA	605.0901 CY	605.981012--18 FT	605.981015--18 FT	605.981018--18 FT	605.981024--18 FT	605.981030--18 FT	655.05010010 EA	655.1011 EA	655.1202 EA
DS 100	8+68.60	24.73	LT.	TYPE B (RPWD)	No. 11	INSTALL CATCH BASIN OUTLET TO TRUNK LINE	569.49	N 564.25	9.62	12.11								1				6.07											1	
DS 101	8+66.82	25.97	RT.	TYPE B (RPWD)	No. 11	INSTALL CATCH BASIN CONNECT TO EXISTING 10" ACP	568.54	N 566.00	5.34	6.73								1				3.37											1	
EX 102	11+22.77	34.08	RT.	EXISTNG	-	ADJUST EXISTING M.H. FRAME AND COVER OUTLET TO 21" SW INLET 21" SW INLET FROM DS 102 INLET	573.08	W 564.88 N 564.95 SE 565.20 E 565.21									1															1		
DS 102	11+89.80	15.06	LT.	MANHOLE (RPWD)	-	INSTALL MANHOLE INSTALL 66.4 FT OF 18" PVC TO EX 102 INLET FROM DS 108	573.39	W 565.90 E 566.23	15.84 51.11	19.73 71.29						66.4	1						8.32											1
DS 103	11+79.80	27.81	LT.	TYPE B (RPWD)	No. 11	INSTALL CATCH BASIN 8" INSTALL 10.2 FT OF ~~12"~~ PVC TO TRUNK LINE	573.36	S 570.36	6.07 4.48	7.64 6.86					10.2			1				3.83											1	
DS 104	12+01.27	39.34	RT.	TYPE B (RPWD)	No. 11	INSTALL CATCH BASIN 8" INSTALL 53.4 FT OF ~~12"~~ PVC TO TRUNK LINE	572.98	N 569.98	6.07 24.51	7.64 36.96					53.4			1				3.83											1	
DS 105	12+96.14	45.82	RT.	TYPE B (RPWD)	No. 11	INSTALL CATCH BASIN 8" INSTALL 59.6 FT OF ~~12"~~ PVC TO TRUNK LINE	572.81	N 569.86	5.99 25.20	7.54 39.35					60.6			1				3.78											1	
DS 106	13+99.69	25.13	LT.	TYPE B (RPWD)	No. 11	INSTALL CATCH BASIN 8" INSTALL 9.5 FT OF ~~12"~~ PVC TO TRUNK LINE	574.15	S 571.15	6.07 3.58	7.64 5.80					9.5			1				3.83											1	
DS 107	13+99.93	47.35	RT.	TYPE B (RPWD)	No. 11	INSTALL CATCH BASIN 8" INSTALL 61.0 FT OF ~~12"~~ PVC TO TRUNK LINE	573.52	N 570.52	6.07 26.02	7.64 40.23					61.0			1				3.83											1	
DS 108	14+45.30	14.49	LT.	TYPE B (RPWD)	-	INSTALL MANHOLE INSTALL 252.3 FT OF 18" PVC TO DS 102 INLET FROM DS 113	574.83	W 567.62 E 567.71	12.74 177.65	16.04 254.33						252.3	1					8.04												1
DS 109	14+62.32	38.50	LT.	TYPE B (RPWD)	No. 11	INSTALL CATCH BASIN 8" INSTALL 9.4 FT OF ~~12"~~ PVC TO EX 103	574.41	S 570.04	8.24 3.59	10.38 5.79					9.4			1				5.20											1	
EX 103	11+71.29	155.50	RT.	EXISTING M.H.	-	ADJUST EXISTING M.H. FRAME AND COVER OUTLET TO NORTH INLET FROM DS 109 INLET FROM DS 110	574.76	N 569.21 W 569.22 E 569.22									1															1		
DS 110	14+97.23	39.54	LT.	TYPE B (RPWD)	No. 11	INSTALL CATCH BASIN 8" 12" PVC FOR PRIVATE STORM INSTALL 20.0 FT OF ~~12"~~ PVC TO EX 103 8" PVC TO CB	574.45	N 570.02	8.34 7.68	10.50 12.33					20.0			1				5.26											1	
DS 110.5	15+12.97	25.12	LT.	TYPE B (RPWD)	No. 11	INSTALL CATCH BASIN 8" INSTALL 10.1 FT OF ~~12"~~ PVC TO TRUNK LINE	574.98	S 571.26	7.21 4.75	9.08 7.82						10.1		1				4.55											1	
DS 111	16+00.32	24.55	LT.	TYPE B (RPWD)	No. 11	INSTALL CATCH BASIN 8" INSTALL 10.4 FT OF ~~12"~~ PVC TO TRUNK LINE	575.62	S 571.19	8.34 4.76	10.50 7.19					10.4			1				5.26											1	
DS 112	15+99.87	45.85	RT.	TYPE B (RPWD)	No. 11	INSTALL CATCH BASIN 8" INSTALL 58.0 FT OF ~~12"~~ PVC TO TRUNK LINE	575.01	N 572.01	6.07 24.50	7.64 38.02					58.0			1				3.83											1	
DS 113	16+09.06	13.04	LT.	MANHOLE (RPWD)	-	INSTALL MANHOLE INSTALL 159.6 FT OF 18" PVC TO DS 108 INLET FROM DS 116	576.06	W 568.91 E 568.91	15.20 111.33	18.92 159.84						159.6	1						7.98											1
DS 114	18+00.04	22.31	LT.	TYPE B (RPWD)	No. 11	INSTALL CATCH BASIN 8" INSTALL 10.3 FT OF ~~12"~~ PVC TO TRUNK LINE	577.13	S 574.13	6.07 4.12	7.64 6.53					10.3			1				3.83											1	
DS 115	18+00.28	31.25	RT.	TYPE B (RPWD)	No. 11	INSTALL CATCH BASIN 8" INSTALL 41.2 FT OF ~~12"~~ PVC TO TRUNK LINE	576.90	N 573.90	6.07 18.11	7.64 27.73					41.2			1				3.83											1	
DS 116	18+08.98	10.91	LT.	MANHOLE (RPWD)	-	INSTALL MANHOLE INSTALL 195.9 FT OF 18" PVC TO DS 113	577.69	W 569.98	16.26 144.23	20.25 203.78						195.9	1						8.54											1
DS 117	21+58.40	2.00	RT.	MANHOLE (RPWD)	-	INSTALL MANHOLE INSTALL 222.6 FT OF 18" PVC TO DS 122	576.47	W 571.38	11.28 85.64	14.04 153.30						222.6	1						5.92											1
DS 118	21+69.22	18.37	LT.	TYPE B (RPWD)	No. 11	INSTALL CATCH BASIN INSTALL 19.4 FT OF 12" PVC TO TRUNK LINE	575.64	S 572.64	6.07 5.10	7.64 9.62					19.4			1				3.83											1	
DS 119	21+70.02	30.01	RT.	TYPE B (RPWD)	No. 11	INSTALL CATCH BASIN INSTALL 27.0 FT OF 12" PVC TO TRUNK LINE	575.30	N 572.30	6.07 6.94	7.64 13.24					27.0			1				3.83											1	
DS 120	21+87.66	33.08	LT.	TYPE B (RPWD)	No. 11	INSTALL CATCH BASIN INSTALL 33.8 FT OF 12" PVC TO TRUNK LINE	574.83	S 571.09	7.25 10.48	9.12 18.36					33.8			1				4.57											1	
DS 121	22+21.24	32.61	LT.	TYPE B (RPWD)	No. 11	INSTALL CATCH BASIN INSTALL 33.3 FT OF 12" PVC TO TRUNK LINE	574.22	S 570.20	7.69 11.38	9.68 19.14					33.3			1				4.85											1	
DS 122	23+84.97	1.93	RT.	MANHOLE (RPWD)	-	IINSTALL MANHOLE INSTALL 269.7 FT OF 18" PVC TO DS 127 INLET FROM DS 117	570.00	E 565.59 W 565.59	9.98 91.73	12.43 173.70						269.7	1						5.24											
DS 123	23+95.56	22.31	RT.	TYPE B (RPWD)	No. 11	INSTALL CATCH BASIN INSTALL 19.3 FT OF 12" PVC TO TRUNK LINE	569.11	N 566.11	6.07 4.27	7.64 8.78					19.3			1				3.83											1	
DS 124	24+00.07	18.37	LT.	TYPE B (RPWD)	No. 11	INSTALL CATCH BASIN INSTALL 19.4 FT OF 12" PVC TO TRUNK LINE	569.07	S 566.07	6.07 4.35	7.64 8.86					19.4			1				3.83											1	
EX 104	25+27.06	34.29	LT.	EXISTING C.B.	-	TO REMAIN OUTLET TO EXISTING CLEANOUT	566.21	E 565.59																										
EX 105	25+53.23	35.84	LT.	EXISTING C.B.	-	TO REMAIN INSTALL 36.4 FT OF 6" PVC FROM EXISTING CLEANOUT TO TRUNK	565.58	S 564.68	5.20	11.64				36.4																				
DS 125	25+97.01	18.35	RT.	TYPE B (RPWD)	No. 11	INSTALL CATCH BASIN 8" INSTALL 15.4 FT OF ~~12"~~ PVC TO TRUNK LINE	564.31	N 561.31	6.07 3.39	7.64 6.97					15.4			1				3.83											1	
DS 126	25+99.97	17.87	LT.	TYPE B (RPWD)	No. 11	INSTALL CATCH BASIN 8" INSTALL 18.9 FT OF ~~12"~~ PVC TO TRUNK LINE	564.32	S 561.36	6.01 4.58	7.56 9.22					19.9			1				3.79											1	
DS 127	26+58.70	1.99	RT.	MANHOLE (RPWD)	-	INSTALL MANHOLE INSTALL 231.4 FT OF 18" PVC TO DS 131 INLET FROM DS 122	563.41	E 559.00 W 559.00	9.98 84.32	12.43 154.65						231.4	1						5.24											
DS 128	27+97.99	18.37	RT.	TYPE B (RPWD)	No. 11	INSTALL CATCH BASIN 8" INSTALL 15.4 FT OF ~~12"~~ PVC TO TRUNK LINE	559.01	N 556.01	6.07 4.59	7.64 8.18					15.4			1				3.83												
DS 129	27+99.94	18.40	LT.	TYPE B (RPWD)	No. 11	INSTALL CATCH BASIN INSTALL 15.2 FT OF 12" PVC TO TRUNK LINE	559.01	S 556.01	6.07 4.62	7.64 8.16					15.2			1				3.83												
DS 130	28+77.81	29.96	LT.	TYPE B (RPWD)	No. 11	INSTALL CATCH BASIN 8" INSTALL 30.2 FT OF ~~12"~~ PVC TO TRUNK LINE	554.81	S 552.15	5.53 7.48	6.97 14.67					30.8			1				3.49												
								SUBTOTAL	1225.60	1863.36	0	0	0	36.4	592.7	1408.0	9	25	0.0	0.0	0.0	111.9	41.3											

"I hereby certify by my signature and seal below, that I have prepared this record drawing which is, to the best of my knowledge and in my professional opinion, a true representation of the work as constructed on the Westfall Road Improvements Phase III, Project No. 1409."

STATE OF NEW YORK
MATTHEW J. SCHOOLEY
LICENSED PROFESSIONAL ENGINEER
No. 069983

NO.	DATE	BY:	REVISION
1	10/13	JBR	REVISED PVC PIPE SIZE TO TRUNK LINE

Barton & Loguidice, P.C.

DESGIN BY: JMW
DRAFTED BY: JMW\JJB

DEPARTMENT OF TRANSPORTATION
50 WEST MAIN STREET, SUITE 6100
ROCHESTER, NEW YORK 14614-1231

UNAUTHORIZED ALTERATION OR ADDITION TO THIS DRAWING IS A VIOLATION OF THE NEW YORK STATE EDUCATION LAW ARTICLE 145, SECTION 7209

PROJECT NAME: WESTFALL ROAD
LIMITS: E. HENRIETTA ROAD TO LAC-DE-VILLE BLVD
TOWN: BRIGHTON
CITY: ROCHESTER
CAPITAL PROJECT NO. 4753.77
BRIDGE IDENTIFICATION NO. N.A.

DRAINAGE TABLES

SCALE: NO SCALE
DATE ISSUED: 4/25/2014
DRAWING NO. DT-1
SHEET NO. 29 OF 112

DRAINAGE STRUCTURE TABLE

STRUCTURE NUMBER	CENTERLINE STATION	OFFSET (FT)	SIDE	STRUCTURE TYPE	FRAME & GRATE	DESCRIPTION	RIM ELEV. (FT)	INVERT ELEV (FT)	203.07	206.02	603.171216	603.171316	603.17143001	603.98100604	603.98101204	603.98101804	604.10	604.11	604.300211	604.300311	604.300611	604.301911	604.4048	604.500401	604.070401	605.0901	605.981012–18	605.981015–18	605.981018–18	605.981024–18	605.981030–18	655.05010010	655.1011	655.1202
									CY	CY	EA	EA	EA	FT	FT	FT	EA	EA	FT	FT	FT	FT	FT	FT	EA	CY	FT	FT	FT	FT	FT	EA	EA	EA
DS 131	28+96.78	1.98	RT.	MANHOLE (RPWD)	-	INSTALL MANHOLE	554.83		12.02	14.96							1						6.31											1
						INSTALL 58.9 FT OF 18" PVC TO DS 133		NE 549.35	27.49	45.39						58.9																				
						INLET FROM DS 127		W 550.05																										
DS 132	29+05.90	32.62	LT.	TYPE B (RPWD)	No. 11	INSTALL CATCH BASIN	553.92		5.63	7.09								1				3.55											1	
						INSTALL 21.4 FT OF 12" PVC TO TRUNK LINE		SE 551.20	4.31	9.01					20.2																				
DS 133	~~29+42.45~~	~~38.35~~	LT.	END SECTION		INSTALL 18" GALVANIZED STEEL PIPE END SECTION	-	- 549.06			1																							
DS 134	30+00.01	18.35	LT.	TYPE S	No. 11	INSTALL CATCH BASIN	547.37		6.07	7.64								1				3.83											1	
						INSTALL 34.7 FT OF 12" SICPP TO DS 135		S 544.37	2.21	14.60																3.72	34.7								
DS 135	29+99.98	18.36	RT.	TYPE S	No. 11	INSTALL CATCH BASIN	547.37		6.33	7.96								1				3.99											1	
						INSTALL 197.2 FT OF 12" SICPP TO DS 138		E 544.21	21.81	92.17																21.15	197.2								
						INLET FROM DS 134		N 544.20																										
DS 136	31+09.42	47.80	LT.	TYPE A M.H.		INSTALL MANHOLE	540.38		16.55	20.61							1						8.69											1
						INSTALL 92.1 FT OF 12" SICPP TO DS 137		E 532.52	31.21	64.08																9.88	92.1								
DS 137	32+00.17	18.35	LT.	TYPE S	No. 11	INSTALL CATCH BASIN	533.60		6.07	7.64								1				3.83											1	
						INSTALL 42.8 FT OF 12" SICPP TO DS 138		S 530.60	2.35	17.61																4.59	42.8								
						INLET FROM DS 136		W 530.60																										
DS 138	31+99.68	26.41	RT.	TYPE S	No. 11	INSTALL CATCH BASIN	533.35		7.47	9.40								1				4.71											1	
						INSTALL 227.7 FT OF 12" SICPP TO DS 140		E 529.47	31.59	112.85																24.43	227.7								
						INLET FROM DS 135		W 529.54																										
						INLET FROM DS 137		N 530.33																										
DS 139	34+30.83	18.63	LT.	TYPE S	No. 11	INSTALL CATCH BASIN	522.84		6.07	7.64								1				3.83											1	
						INSTALL 46.5 OF 12" SICPP TO DS 140		S 519.84	2.99	19.60																4.99	46.5								
DS 140	34+30.04	29.89	RT.	TYPE S	No. 11	INSTALL CATCH BASIN 15"	522.50		7.39	9.30								1				4.66											1	
						INSTALL 167.7 FT OF ~~12"~~ SICPP TO DS 143		E 518.67	16.71	85.38																20.79		168.0							
						INLET FROM DS 138		W 518.93																										
						INLET FROM DS 139		N 519.32																										
						INLET FROM DS 141		S 519.30																										
DS 141		29.59	RT.	END SECTION		INSTALL 18" GALVANIZED STEEL PIPE END SECTION	-				1																							
						INSTALL 23.0 FT OF 12" SICPP TO DS 140		N 519.86	1.50	9.71																2.47	23.0								
DS 142	35+99.76	18.37	LT.	TYPE S	No. 11	INSTALL CATCH BASIN	519.45		6.07	7.64								1				3.83											1	
						INSTALL 34.8 FT OF 12" SICPP TO DS 143		S 516.45	2.54	14.82																3.69	34.4								
DS 143	35+99.99	18.40	RT.	TYPE S	No. 11	INSTALL CATCH BASIN	519.45		6.79	8.54								1				4.28											1	
						INSTALL 197.9 FT OF 18" SICPP TO DS 145		E 516.00	17.17	109.09																27.83			197.9						
						INLET FROM DS 140		W 516.25																										
						INLET FROM DS 142		N 516.11																										
DS 144	37+99.98	18.36	LT.	TYPE S	No. 11	INSTALL CATCH BASIN	518.40		6.07	7.64								1				3.83											1	
						INSTALL 34.8 FT OF 12" SICPP TO DS 145		S 515.40	2.64	14.69																3.62	33.8								
DS 145	38+00.35	18.40	RT.	TYPE B	No. 11	INSTALL CATCH BASIN	518.40		9.65	13.35								1	5.01														1	
						INSTALL 125.1 FT OF 24" SICPP TO DS 148		E 514.22	20.61	93.81																21.89				124.3					
						INLET FROM DS 143		W 514.73																										
						INLET FROM DS 144		N 514.98																										
DS 145.5	38+50.07	39.34	LT.	END SECTION	-	INSTALL 30" GALVANIZED STEEL PIPE END SECTION	-						1																					
						INSTALL 11.1 FT OF 24" SICPP TO DS 146		516.33	0.42	6.98																1.96				11.1					
DS 146	38+63.21	39.52	LT.	TYPE F	No. 11	INSTALL CATCH BASIN	520.00		13.57	19.60								1			6.6												1	
						INSTALL 64.5 FT OF 24" SICPP TO DS 147		SE 514.28	19.11	65.24																13.50					63.2				
DS 147	39+26.80	18.36	LT.	TYPE F	No. 11	INSTALL CATCH BASIN	517.76		12.53	18.11								1			6.1												1	
						INSTALL 45.7 FT OF 30" SICPP TO DS 148		S 512.54	10.87	42.78																9.33					43.7				
						INLET FROM DS 146		NW 512.54																										
DS 148	39+27.68	29.36	RT.	TYPE F	No. 11	INSTALL CATCH BASIN	517.42		12.28	17.75								1			5.9												1	
						INSTALL 201.4 FT OF 30" SICPP TO DS 150		E 512.32	47.36	193.48																42.74					200.3				
						INLET FROM DS 145		W 512.82																										
						INLET FROM DS 147		N 512.32																										
DS 148.5	40+75.88	50.35	~~LT.~~ RT.	END SECTION	-	INSTALL 21" GALVANIZED STEEL PIPE END SECTION	-					1																						
						INSTALL 47.9 FT OF 18" SICPP TO DS 151		514.87	-1.53	20.70																6.73			47.9						
DS 149	41+31.97	18.54	LT.	TYPE S	No. 11	INSTALL CATCH BASIN	516.72		6.07	7.64								1				3.83											1	
						INSTALL 45.6 FT OF 12" SICPP TO DS 150		S 513.72	3.94	19.95																4.81	44.9								
DS 150	41+31.42	29.34	RT.	TYPE B	No. 11	INSTALL CATCH BASIN	516.40		11.38	15.75								1	5.91														1	
						INSTALL 117.6 FT OF 30" SICPP TO DS 155		E 511.32	30.53	116.00																25.00					117.1				
						INLET FROM DS 148		W 511.32																										
						INLET FROM DS 151		S 512.32																										
						INLET FROM DS 149		N 512.82																										
DS 151	41+25.08	50.10	RT.	TYPE S	No. 11	INSTALL CATCH BASIN 18"	517.00		8.24	10.38								1				5.20											1	
						INSTALL 19.5 FT OF ~~12"~~ SICPP TO DS 150		N 512.63	3.34	12.10																2.65			18.9						
DS 152	41+72.43	52.00	LT.	TYPE S	No. 11	INSTALL CATCH BASIN	515.89		6.01	7.56								1				3.79											1	
						INSTALL 38.0 FT OF 12" SICPP TO DS 153		E 512.93	1.63	16.86																4.61		37.3							
DS 153	42+11.60	45.29	LT.	TYPE F	No. 11	INSTALL CATCH BASIN	515.84		8.39	12.12								1			4.1												1	
						INSTALL 43.8 FT OF 12" SICPP TO DS 154		SE 512.62	4.46	22.11																5.34		43.2							
						INLET FROM DS 152		W 512.65																										
DS 154	42+49.26	18.56	LT.	TYPE B	No. 11	INSTALL CATCH BASIN 15"	516.16		9.09	12.58								1	4.72														1	
						INSTALL 36.0 FT OF ~~12"~~ SICPP TO DS 155		S 512.27	5.71	20.15																4.37		35.4							
						INLET FROM DS 153		NW 512.29																										
DS 155	42+51.30	20.67	RT.	TYPE B	No. 11	INSTALL CATCH BASIN	516.11		11.96	16.55								1	6.21														1	
						INSTALL 145.8 FT OF 30" SICPP TO DS 157		E 510.73	41.66	148.05																31.12					145.8				
						INLET FROM DS 150		W 510.73																										
						INLET FROM DS 154		N 512.00																										
DS 156	43+99.82	18.37	LT.	TYPE S	No. 11	INSTALL CATCH BASIN	515.37		6.07	7.64								1				3.83												
						INSTALL 33.7 FT OF 12" SICPP TO DS 157		S 512.37	3.43	15.47																										
DS 157	44+00.03	18.37	RT.	TYPE B	No. 11	INSTALL CATCH BASIN	515.37		11.94	16.52								1	6.20															
						INSTALL 77.2 FT OF 30" SICPP TO EX 106		E 510.00	27.60	82.49																										
						INLET FROM DS 155		W 510.00																										
						INLET FROM DS 156		N 511.55																										
EX 106	44+79.60	31.78	RT.	EXISTING DRAINAGE STRUCTURE		ADJUST EXISTING FRAME AND COVER	515.94																											
						INLET FROM DS 157		W 509.57																										
						INLET FROM EXISTING 42"X72" CMP		N 509.62																										
						OUTLET EXISTING 36"X58" CMP		E 509.62																										
						OUTLET EXISTING 36"X58" CMP		E 509.57																										
								SUBTOTAL	603.38	1776.84	2	1	1	0.0	20.2	58.9	2	23	28.1	0.0	22.6	57.0	15.0										

"I hereby certify by my signature and seal below, that I have prepared this record drawing which is, to the best of my knowledge and in my professional opinion, a true representation of the work as constructed on the Westfall Road Improvements Phase III, Project No. 1409."

STATE OF NEW YORK · MATHEW J. SCHMITT · No. 069983 · LICENSED PROFESSIONAL ENGINEER

NO.	DATE	BY:	REVISION
1	10/1/13	JMW	REVISED SICPP SIZE TO DS

Barton & Loguidice, P.C.

DRAFTED BY: JMW/JJB

DESIGN BY: JMW

DEPARTMENT OF TRANSPORTATION
50 WEST MAIN STREET, SUITE 6100
ROCHESTER, NEW YORK 14614-1231

UNAUTHORIZED ALTERATION OR ADDITION TO THIS DRAWING IS A VIOLATION OF THE NEW YORK STATE EDUCATION LAW ARTICLE 145, SECTION 7209

PROJECT NAME: WESTFALL ROAD
LIMITS: E. HENRIETTA ROAD TO LAC-DE-VILLE BLVD
TOWN: BRIGHTON
CITY: ROCHESTER
CAPITAL PROJECT NO.: 4753.77
BRIDGE IDENTIFICATION NO.: N.A.

DRAINAGE TABLES

SCALE: NO SCALE
DATE ISSUED: 4/25/2014
DRAWING NO. DT-2
SHEET NO. 30 OF 112

mek
I:\MicroStation\Workspace\PLOT\NYSDOT\NYSDOT_SIZE_B.TBL
I:\MicroStation\Workspace\Plot\NYSDOT\NYSDOT_HPLJ5200_B.plt

FILE NAME = I:\Shared\1000\1066005\AS-BUILTS\1066005_dt_02.dgn
DATE = 4/25/2014
TIME = 10:05:39 AM

mek
I:\MicroStation\Workspace\PLOT\NYSDOT\NYSDOT_SIZE_B.TBL
I:\MicroStation\Workspace\Plot\NYSDOT\NYSDOT_HPLJ5200_B.plt

DRAINAGE STRUCTURE TABLE

STRUCTURE NUMBER	CENTERLINE STATION	OFFSET (FT)	SIDE	STRUCTURE TYPE	FRAME & GRATE	DESCRIPTION (revision 1)	RIM ELEV. (FT)	INVERT ELEV (FT)	203.07 CY	206.02 CY	603.171216 EA	603.171316 EA	603.17143001 EA	603.98100604 FT	603.98101204 FT	603.98101804 FT	604.10 EA	604.11 EA	604.300211 FT	604.300311 FT	604.300611 FT	604.301911 FT	604.4048 FT	604.500401 FT	604.070401 EA	605.0901 CY	605.981012--18 FT	605.981015--18 FT	605.981018--18 FT	605.981024--18 FT	605.981030--18 FT	655.05010010 EA	655.1011 EA	655.1202 EA
DS 158	45+99.78	34.98	LT.	FIELD INLET	-	INSTALL FIELD INLET PVC INSTALL 14.1 FT OF 12" ~~SICPP~~ TO DS 159	513.42	S 511.43	1.25 1.47	1.67 4.76					14.1									2.8										
DS 159	46+00.10	18.39	LT.	TYPE S	No. 11	INSTALL CATCH BASIN ~~INSTALL 34.4 FT OF 12" SICPP TO DS 160~~ INLET FROM DS 158	514.36	S 511.36 N 511.36	6.07 2.19	7.64 14.47								1				3.83				3.69	34.4						1	
DS 160	46+00.19	18.37	RT.	TYPE S	No. 11	INSTALL CATCH BASIN INSTALL 198.07 FT OF 18" SICPP TO DS 163 INLET FROM DS 159	514.36	E 510.69 N 511.19	7.13 20.69	8.98 112.70								1				4.50				27.86			198.1				1	
DS 161	47+99.15	34.98	LT.	FIELD INLET	-	INSTALL FIELD INLET INSTALL 14.1 FT OF 12" SICPP TO DS 162	512.54	S 510.52	1.27 1.47	1.69 4.77					14.13									2.9										
DS 162	47+99.72	18.36	LT.	TYPE S	No. 11	INSTALL CATCH BASIN ~~INSTALL 34.4 FT OF 12" SICPP TO DS 163~~ INLET FROM DS 161 FROM DS 159	513.41	S 510.41 N 510.44	6.07 3.14	7.64 15.41												3.83				3.69	34.4						1	
DS 163	48+00.32	18.36	RT.	TYPE ~~S~~ B	No. 11	INSTALL CATCH BASIN 24" INSTALL 164.0 FT OF ~~18"~~ SICPP TO DS 165 INLET FROM DS 160 INLET FROM DS 162	513.41	E 509.21 W 509.70 N 509.77	7.97 25.03	10.04 121.58												5.03				28.87				164.0			1	
DS 164	49+66.04	18.35	LT.	TYPE S	No. 11	INSTALL CATCH BASIN ~~INSTALL 34.4 FT OF 12" SICPP TO DS 165~~	512.79	S 509.79	6.07 3.18	7.64 15.44												3.83				3.69	34.4						1	
DS 165	49+66.28	18.35	RT.	TYPE ~~S~~ B (24" PIPE)	No. 11	INSTALL CATCH BASIN INSTALL 198.7 FT OF 24" SICPP TO DS 167 INLET FROM DS 163 INLET FROM DS 164	512.80	E 508.39 W 508.39 N 509.14	8.31 38.62	10.46 155.63												5.24				34.99				198.7			1	
DS 166	51+67.50	18.91	LT.	TYPE S	No. 11	INSTALL CATCH BASIN INSTALL 34.0 FT OF 12" SICPP TO DS 167	512.14	S 509.14	6.07 3.07	7.64 15.21												3.83				3.65	34.0						1	
DS 167	51+67.50	18.63	RT.	TYPE C	No. 11	INSTALL CATCH BASIN INSTALL 33.6 FT OF 24" SICPP TO DS 168 INLET FROM DS 165 INLET FROM DS 166	512.14	SE 507.40 W 507.40 N 508.52	11.57 2.87	16.52 22.65										5.6						5.91				33.6			1	
DS 168	51+67.50	42.29	RT.	END SECTION	-	INSTALL 30" GALVANIZED STEEL PIPE END SECTION	-	- 507.23					1																					
DS 169	51+67.50	50.90	RT.	END SECTION	-	INSTALL ~~21"~~ 30" GALVANIZED STEEL PIPE END SECTION	-	- 507.50				1																						
DS 170	52+32.50	18.63	RT.	TYPE F	No. 11	INSTALL CATCH BASIN 24" INSTALL 34.2 FT OF ~~18"~~ SICPP TO DS 169 INLET FROM DS 172	512.33	SW 507.85 E 507.87	11.00 3.16	15.89 23.27											5.3					6.01				34.2			1	
DS 171	53+67.50	23.35	LT.	TYPE S	No. 11	INSTALL CATCH BASIN INSTALL 39.7 FT OF 12" SICPP TO DS 172	513.66	S 510.66	6.07 4.41	7.64 18.55												3.83				4.25	39.7						1	
DS 172	53+67.50	18.63	RT.	TYPE ~~S~~ B	No. 11	INSTALL CATCH BASIN 24" INSTALL 132.0 FT OF ~~18"~~ SICPP TO DS 170 INLET FROM EXISTING INLET FROM DS 171 INLET FROM DS 174	513.80	W 509.32 S 510.09 N 509.82 E 509.81	8.42 23.51	10.60 101.24												5.31				23.24				132.0			1	
DS 173	55+99.00	28.50	LT.	TYPE S	No. 11	INSTALL CATCH BASIN INSTALL 45.1 FT OF 12" SICPP TO DS 174	519.43	S 515.93	6.87 6.87	8.64 22.62												4.33				4.73	44.1						1	
DS 174	55+99.00	18.63	RT.	TYPE B	No. 11	INSTALL CATCH BASIN INSTALL 229.0 FT OF 18" SICPP TO DS ~~176~~ 172 INLET FROM DS 173 INLET FROM DS 176	519.72	W 514.62 N 515.48 E 514.63	11.42 50.51	15.80 156.89									5.93							32.21			229.0				1	
DS 175	57+60.00	29.63	~~RT.~~ LT.	TYPE S	No. 11	INSTALL CATCH BASIN INSTALL 56.9 FT OF 12" SICPP TO DS 177	525.94	S 522.46	6.83 8.17	8.60 28.48												4.31				6.11	56.9						1	
DS 176	56+76.00	29.62	RT.	TYPE S	No. 11	INSTALL CATCH BASIN INSTALL 75.3 FT OF 18" SICPP TO DS 174 INLET FROM DS 177	522.34	W 517.76 E 517.76	8.58 19.58	10.80 54.56												5.41				10.59			75.3				1	
DS 177	57+60.00	29.63	RT.	TYPE S	No. 11	INSTALL CATCH BASIN INSTALL 82 FT OF 18" SICPP TO DS 176 INLET FROM DS 175 INLET FROM DS 179	525.94	W 521.43 N 521.89 E 521.43	8.47 18.20	10.66 56.29												5.34				11.53			82.0				1	
DS 178	59+00.00	29.63	LT.	TYPE S	No. 11	INSTALL CATCH BASIN INSTALL 56.9 FT OF 12" SICPP TO DS 179	532.17	S 528.68	6.85 8.23	8.62 28.54												4.32				6.11	56.9						1	
DS 179	~~59+00.00~~ 58+55	29.63	RT.	TYPE S	No. 11	INSTALL CATCH BASIN INSTALL 138 FT OF 18" SICPP TO DS 177 INLET FROM DS 178 INLET FROM DS 181	532.17	W 527.60 N 528.11 E 527.60	8.56 30.72	10.78 94.83												5.40				19.41			138.0				1	
DS 179.5		48.16	LT.	TYPE S	No. 11	INSTALL CATCH BASIN INSTALL 28.9 FT OF 12" SICPP TO EX 107 (INV. 526.43)	531.44	W 528.44	6.07 2.91	7.64 13.22												3.83				3.10	28.9						1	
DS 180	60+52.50	29.63	LT.	TYPE S	No. 11	INSTALL CATCH BASIN INSTALL 51.0 FT OF 12" SICPP TO DS 181 INLET FROM DS 182	537.69	S 533.60 E 533.60	7.80 15.80	9.82 27.69					51							4.92											1	
DS 181	60+52.50	23.37	RT.	TYPE A M.H.		INSTALL MANHOLE INSTALL 149.6 FT OF 18" SICPP TO DS 179 INLET FROM DS 180 INLET FROM DS 183	537.89	W 532.84 N 533.34 E 534.12	11.20 38.59	13.94 108.10													5.88			21.05			149.6					1
DS 182	62+14.16	30.64	LT.	TYPE S	No. 11	INSTALL CATCH BASIN INSTALL 160.7 FT OF 12" SICPP TO DS 180 INLET FROM DS 185	539.57	W 534.40 E 534.39	9.51 39.44	11.97 96.78												6.00				17.24	160.7						1	
DS 182.5	62+17.50	23.37	RT.	TYPE A M.H.		INSTALL MANHOLE INSTALL 161.0 FT OF 12" SICPP TO DS 181 INLET FROM DS 183	539.77	W 535.73 SE 535.73	9.28 25.73	11.55 83.18													4.87											
DS 183	62+27.32	48.09	RT.	TYPE S	No. 11	INSTALL CATCH BASIN INSTALL 23.7 FT OF 12" SICPP TO DS 182.5 INLET FROM DS 184	539.93	W 535.85 SE 535.85	7.78 4.23	9.80 12.70												4.91												
DS 184	62+36.25	77.40	RT.	TYPE S	No. 11	INSTALL CATCH BASIN INSTALL 28.6 FT OF 12" SICPP TO DS 183 INLET FROM DS 186	540.20	NW 535.99 E 535.99	7.99 5.37	10.06 15.56												5.04												
								SUBTOTAL	611.64	1687.90	0	1	1	0.0	79.2	0.0	0	2	5.9	5.6	5.3	93.1	10.8											

"I hereby certify by my signature and seal below, that I have prepared this record drawing which is, to the best of my knowledge and in my professional opinion, a true representation of the work as constructed on the Westfall Road Improvements Phase III, Project No. 1409."

STATE OF NEW YORK · MATTHEW J. SCHOOLEY · LICENSED PROFESSIONAL ENGINEER · No. 069983

NO.	DATE	BY:	REVISION
1	10/13	JBR	REVISED INFO IN DESCRIPTION BOX

Barton & Loguidice, P.C.
DESGIN BY: JMW
DRAFTED BY: JMW\JJB

DEPARTMENT OF TRANSPORTATION
50 WEST MAIN STREET, SUITE 6100
ROCHESTER, NEW YORK 14614-1231

UNAUTHORIZED ALTERATION OR ADDITION TO THIS DRAWING IS A VIOLATION OF THE NEW YORK STATE EDUCATION LAW ARTICLE 145, SECTION 7209

PROJECT NAME: WESTFALL ROAD
LIMITS: E. HENRIETTA ROAD TO LAC-DE-VILLE BLVD
TOWN: BRIGHTON
CITY: ROCHESTER
CAPITAL PROJECT NO.: 4753.77
BRIDGE IDENTIFICATION NO.: N.A.

DRAINAGE TABLES

SCALE: NO SCALE
DATE ISSUED: 4/25/2014
DRAWING NO. DT-3
SHEET NO. 31 OF 112

FILE NAME = I:\Shared\1000\1066005\AS-BUILTS\1066005_dt_03.dgn
DATE = 4/25/2014
TIME = 10:06:14 AM

DRAINAGE STRUCTURE TABLE

STRUCTURE NUMBER	CENTERLINE STATION	OFFSET (FT)	SIDE	STRUCTURE TYPE	FRAME & GRATE	DESCRIPTION	RIM ELEV. (FT)	INVERT ELEV (FT)	203.07 CY	206.02 CY	603.171216 EA	603.171316 EA	603.17143001 EA	603.98100604 FT	603.98101204 FT	603.98101804 FT	604.10 EA	604.11 EA	604.300211 FT	604.300311 FT	604.300611 FT	604.301911 FT	604.4048 FT	604.500401 FT	604.070401 EA	605.0901 CY	605.981012--18 FT	605.981015--18 FT	605.981018--18 FT	605.981024--18 FT	605.981030--18 FT	655.05010010 EA	655.1011 EA	655.1202 EA
DS 185	62+58.02	60.24	LT.	TYPE S	No. 11	INSTALL CATCH BASIN INSTALL 51.1 FT OF 12" SICPP TO DS 182 INLET FROM DS 187	538.95	 SW 534.64 N 534.64	8.15 13.21	10.26 31.45												5.14				5.48	51.1						1	
DS 186	62+78.04	82.17	RT.	TYPE S	No. 11	INSTALL CATCH BASIN INSTALL 39.4 FT OF 12" SICPP TO DS 184	539.69	 W 536.19	6.87 6.06	8.64 20.10												4.33				4.22	39.4						1	
DS 187	62+81.11	132.76	LT.	TYPE S	No. 11	INSTALL CATCH BASIN INSTALL 74.1 FT OF 12" SICPP TO DS 185 INLET FROM DS 188	538.54	 S 535.01 N 535.01	6.91 11.97	8.70 38.40												4.36				7.94	74.1						1	
DS 188	63+08.02	191.24	LT.	TYPE S	No. 11	INSTALL CATCH BASIN INSTALL 63.1 FT OF 12" SICPP TO DS 187	538.99	 S 535.32	7.13 7.82	8.98 30.32												4.50				6.76	63.1						1	
DS 189	63+17.31	74.26	LT.	TYPE S	No. 11 104	INSTALL CATCH BASIN INSTALL ~~26.7~~ FT OF 12" SICPP TO DS ~~190~~ 191 INLET FROM EXISTING	538.33	 S 534.43 N 535.66	7.50 4.94	9.44 14.45												4.73				2.86	26.7						1	
DS 190	~~63+24.50~~ 64+00	46.68	LT.	TYPE B	No. 11 99	INSTALL CATCH BASIN 15" INSTALL ~~41.1~~ FT OF ~~18"~~ SICPP TO DS 191.5 INLET FROM DS 189	537.79	 SE 533.45 NW 533.45	9.96 9.03	13.78 28.11									5.17								5.78			41.1				1	
DS 191	63+35.85	29.68	RT.	TYPE S	No. 11	INSTALL CATCH BASIN INSTALL 233.6 FT OF 15" SICPP TO DS 193	537.67	 E 533.68	7.64 38.01	9.62 133.45												4.82				28.90		233.6					1	
DS 191.5	~~63+64.91~~ 65+00	31.32	LT.	TYPE S	No. 11 155	INSTALL CATCH BASIN 15" INSTALL ~~133.1~~ FT OF ~~18"~~ SICPP TO DS 192 INLET FROM DS 190	536.26	 E 531.53 W 531.53	8.81 26.02	11.10 87.85												5.56				18.72			133.1				1	
DS 192	~~65+00.67~~ 66+60	29.61	LT.	TYPE S	No. 11 54	INSTALL CATCH BASIN INSTALL ~~213.2~~ FT OF 18" SICPP TO DS 194 INLET FROM DS 190	529.61	 E 525.64 W 525.64	7.61 30.24	9.58 129.29												4.80				29.99			213.2				1	
DS 193	65+72.09	29.40	RT.	TYPE S	No. 11 132	INSTALL CATCH BASIN INSTALL ~~195.3~~ FT OF 15" SICPP TO DS 195 INLET FROM DS 191	526.03	 E 522.01 W 522.01	7.69 35.30	9.68 111.00												4.85				22.92		185.3					1	
DS 194	67+16.57	29.35	LT.	TYPE S	No. 11	INSTALL CATCH BASIN INSTALL 81.7 FT OF 18" SICPP TO DS 196 INLET FROM DS 192	519.52	 E 515.58 W 515.58	7.56 11.36	9.52 49.32												4.77				11.49			81.7				1	
DS 195	67+60.01	29.08	RT.	TYPE S	No. 11 79	INSTALL CATCH BASIN 195.5 INSTALL ~~189.6~~ FT OF 15" SICPP TO DS ~~193~~ INLET FROM DS 193 , 230 FT 15" TO DS 199	518.00	 E 513.56 W 513.56	8.35 26.08	10.52 103.62												5.27				23.48		189.8					1	
DS 196	68+00.24	18.64	LT.	TYPE S	No. 11	INSTALL CATCH BASIN INSTALL 212.4 FT OF 18" SICPP TO DS 198 INLET FROM DS 194	517.09	 E 513.14 W 513.14	7.58 35.31	9.54 134.00												4.78				29.88			212.4				1	
DS 197	69+52.40	24.64	RT.	TYPE S	No. 11	INSTALL CATCH BASIN INSTALL 192.7 FT PF 15" SICPP TO DS 199 INLET FROM DS 195	513.92	 E 510.48 W 510.73	6.77 13.19	8.52 102.70												4.27				27.10			192.7				1	
DS 198	70+15.33	18.35	LT.	TYPE S	No. 11	INSTALL CATCH BASIN INSTALL 26.1 FT OF 18" SICPP TO EX 113 INLET FROM DS 196	513.64	 N 509.33 W 509.33	8.15 6.23	10.26 18.33												5.14				3.67			26.1				1	
DS 199	71+47.70	20.25	RT.	TYPE S	No. 11	INSTALL CATCH BASIN INSTALL 192.1 FT OF 15" SICPP TO DS 201 INLET FROM DS 197	513.02	 E 509.60 W 509.61	6.74 14.33	8.48 103.58												4.25				27.03			192.1				1	
DS 200	72+08.54	18.38	LT.	TYPE S	No. 11	INSTALL CATCH BASIN INSTALL 181.6 FT OF 18" SICPP TO DS 202	512.83	 E 508.88	7.58 26.98	9.54 111.33												4.78				25.54			181.6				1	
DS 201	73+42.49	18.37	RT.	TYPE S	No. 11	INSTALL CATCH BASIN INSTALL 187.3 FT OF 18" SICPP TO DS 203 INLET FROM DS 199	512.26	 E 508.72 W 508.74	6.93 16.26	8.72 103.29												4.37				26.35			187.3				1	
DS 202	73+92.77	18.35	LT.	TYPE S	No. 11	INSTALL CATCH BASIN INSTALL 176.1 FT OF 18" SICPP TO DS 204 INLET FROM DS 200	512.05	 E 507.97 W 507.97	7.78 29.16	9.80 110.99												4.91				24.78			176.1				1	
DS 203	75+32.48	18.37	RT.	TYPE S	No. 11	INSTALL CATCH BASIN OUTLET TO EXISTING INLET FROM DS 201	511.46	 E 507.88 W 507.88	6.99	8.80												4.41											1	
DS 204	75+72.25	18.40	LT.	TYPE F	No. 11	INSTALL CATCH BASIN INSTALL 40.9 FT OF 18" SICPP TO EXISTING INLET FROM DS 202	511.29	 NE 507.09 W 507.09	10.42 8.86	15.06 27.87											5.0					5.76			40.9				1	
DS 205	11+59.69	349.78	RT.	MANHOLE (RPWD)	-	~~INSTALL MANHOLE~~ CONNECT TO EXIST. PIPE W/CONC. COLLAR OUTLET TO EXISTING INLET FROM DS 206	568.38	 W 564.37 E 564.37	9.22	11.48													4.84												1
DS 206	11+69.43	349.56	RT.	TYPE B (RPWD)	No. 11	INSTALL CATCH BASIN INSTALL 6.7 FT 12" PVC TO DS 205	568.20	 W 565.27	5.96 1.44	7.51 3.01					6.74							3.76											1	
DS 207	11+59.20	155.20	RT.	MANHOLE (RPWD)	-	~~INSTALL MANHOLE~~ CONNECT TO EXIST. PIPE W/CONC. COLLAR OUTLET TO EXISTING INLET FROM DS 208	570.92	 W 568.34 E 568.34	6.50	8.09													3.41												1
DS 208	11+71.29	155.50	RT.	TYPE B (RPWD)	No. 11	INSTALL CATCH BASIN INSTALL 9.1 FT OF 12" PVC TO DS 207	570.64	 W 568.39	4.88 0.00	6.15 2.99					9.1							3.08											1	
								SUBTOTAL	561.49	1737.21	0	0	0	0.0	15.8	0.0	0	0	5.2	0.0	5.0	96.9	8.3	0.0	0	338.66	254.3	608.6	1678.4	0.0	0.0	0	23	2
								(DWG DT-1 SUBTOTAL)	1225.60	1863.36	0	0	0	36.4	592.7	1408.0	9	25	0.0	0.0	0.0	111.9	41.3	0.0	0	0.00	0.0	0.0	0.0	0.0	0.0	2	25	6
								(DWG DT-2 SUBTOTAL)	603.38	1776.84	2	1	1	0.0	20.2	58.9	2	23	28.1	0.0	22.6	57.0	15.0	0.0	1	320.91	810.9	283.9	264.6	135.5	645.4	0	23	2
								(DWG DT-3 SUBTOTAL)	611.64	1687.90	0	1	1	0.0	79.2	0.0	0	2	5.9	5.6	5.3	93.1	10.8	5.7	0	300.82	737.8	0.0	872.0	562.4	0.0	0	23	2
								TOTAL	3002.12	7065.3	2	2	2	36.4	708.0	1466.9	11	50	39.2	5.6	32.9	359.0	75.3	5.7	1	960.39	1803.0	892.5	2814.9	697.9	645.4	2	94	12

"I hereby certify by my signature and seal below, that I have prepared this record drawing which is, to the best of my knowledge and in my professional opinion, a true representation of the work as constructed on the Westfall Road Improvements Phase III, Project No. 1409."

STATE OF NEW YORK · MATTHEW J. SCHOLTZ · LICENSED PROFESSIONAL ENGINEER · No. 069983

NO.	DATE	BY:	REVISION
1	10/1/12	JJMW	REVISED INFO IN DESCRIPTION

Barton & Loguidice, P.C.

DRAFTED BY: JMW/JJB

DESIGN BY: JMW

DEPARTMENT OF TRANSPORTATION
50 WEST MAIN STREET, SUITE 6100
ROCHESTER, NEW YORK 14614-1231

UNAUTHORIZED ALTERATION OR ADDITION TO THIS DRAWING IS A VIOLATION OF THE NEW YORK STATE EDUCATION LAW ARTICLE 145, SECTION 7209

PROJECT NAME: WESTFALL ROAD
LIMITS: E. HENRIETTA ROAD TO LAC-DE-VILLE BLVD
TOWN: BRIGHTON
CITY: ROCHESTER
CAPITAL PROJECT NO.: 4753.77
BRIDGE IDENTIFICATION NO.: N.A.

DRAINAGE TABLES

SCALE: NO SCALE
DATE ISSUED: 4/25/2014
DRAWING NO. DT-4
SHEET NO. 32 OF 112

mek
I:\MicroStation\Workspace\PLOT\NYSDOT\NYSDOT_SIZE_B.TBL
I:\MicroStation\Workspace\Plot\NYSDOT\NYSDOT_HPLJ5200_B.plt

FILE NAME = I:\Shared\1000\1066005\AS-BUILTS\1066005_dt_04.dgn
DATE = 4/25/2014
TIME = 10:06:38 AM

1

STRUCTURE AND PIPE REMOVAL TABLE

DR NO.	STATION	OFFSET		DESCRIPTION	203.07	204.01	206.02	Note
DR 101	8+66.84	24.1	RT.	REMOVE CATCH BASIN	-	-	-	
DR 102	11+60.99	155.2	RT.	REMOVE CATCH BASIN	-	-	-	
DR 103	11+64.73	349.8	RT.	REMOVE CATCH BASIN	-	-	-	
DR 104	11+88.09	25.1	LT.	REMOVE CATCH BASIN AND REMOVE 7 FT OF 12" RCP (S)	~~4.6~~ 1.7	-	~~8.5~~ 1.7	
DR 105	11+89.80	15.1	LT.	REMOVE MANHOLE AND 70 FT OF 18" CMP (W)	-	-	-	
DR 106	12+34.93	24.4	RT.	REMOVE CATCH BASIN AND REMOVE 35 FT OF 12" RCP (N)	~~11.0~~ 1.8	-	~~20.8~~ 1.8	
DR 107	13+72.35	25.4	LT.	REMOVE CATCH BASIN AND REMOVE 10 FT OF 12" RCP (S)	8.7	-	13.2	
DR 108	13+76.11	19.8	RT.	REMOVE CATCH BASIN AND REMOVE 30 FT OF 12" RCP (N) VCP	~~15.7~~ 3.56	-	3.56 ~~24.4~~	DWR 157
DR 109	14+45.30	14.5	LT.	REMOVE MANHOLE (REPLACED WITH DS 108) AND REMOVE 250 FT OF 18" ~~RCP~~ (W)	-	-	-	
DR 110	14+63.12	39.3	LT.	REMOVE CATCH BASIN (REPLACED WITH DS 109) AND REMOVE 8 FT OF 12" ~~CMP~~ (E) RCP	-	-	-	
DR 111	14+97.37	39.5	LT.	REMOVE CATCH BASIN (REPLACED WITH DS 108) AND REMOVE 19 FT OF 12" ~~CMP~~ (W)	-	-	-	
DR 112	15+46.29	2.8	RT.	REMOVE CATCH BASIN AND REMOVE 10 FT OF 12" RCP (S) RCP	7.3	-	11.8	
DR 113	15+47.60	24.6	LT.	REMOVE CATCH BASIN AND REMOVE 12 FT OF 12" RCP (N)	~~7.1~~ 5.6	-	~~12.0~~ 5.6	DWR 85
DR 114	17+48.70	23.1	LT.	REMOVE CATCH BASIN AND REMOVE 9 FT OF 8" VCP (S) VCP	9.0	-	13.1	
DR 115	17+48.49	11.5	LT.	REMOVE MANHOLE AND REMOVE 308 FT OF 15" VCP (W) AND 60 FT OF 12" ~~RCP~~ (E)	~~16.9~~ 7.8	-	~~21.2~~ 7.8	
DR 116	17+52.49	2.5	RT.	REMOVE CATCH BASIN AND REMOVE 10 FT OF 6" VCP (N)	8.0	-	12.1	DWR 207
DR 117	19+71.09	9.2	LT.	REMOVE MANHOLE AND FILL 160 FT OF 12" VCP WITH CLSM (W)	11.5	~~160~~ 4.65	15.7	
DR 118	21+81.89	6.5	RT.	REMOVE CATCH BASIN AND REMOVE 12 FT OF 8" VCP (N)	~~5.5~~ 1.03	-	~~10.2~~ 1.03	
DR 119	21+88.27	19.0	LT.	REMOVE CATCH BASIN AND REMOVE 11 FT OF 8" VCP (S)	~~2.8~~ 0	-	5.2	DWR 207
DR 120	21+94.93	7.1	LT.	REMOVE MANHOLE AND FILL 220 FT OF 12" RCP WITH CLSM (W)	9.5	~~220~~ 6.40	11.9	
DR 121	24+85.60	6.7	RT.	REMOVE CATCH BASIN AND FILL 43 FT OF 8" VCP WITH CLSM (NE)	2.7 1.03	43	5.1 1.03	DWR 30
DR 122	25+19.49	25.1	LT.	REMOVE CATCH BASIN AND FILL 680 FT OF 12" RCP/CMP WITH CLSM (E)	4.5	680	6.8	
DR 123	28+91.56	6.6	RT.	REMOVE CATCH BASIN AND REMOVE 24 FT OF 8" VCP (NE)	9.8 1.03	-	16.7 1.03	DWR 28
DR 124	29+01.37	18.6	LT.	REMOVE CATCH BASIN AND REMOVE 5 FT OF 8" VCP (N)	4.9	-	8.3	
DR 125	31+26.99	40.8	LT.	REMOVE MANHOLE AND REMOVE 75 FT OF 12" CMP (E) AND 15 FT OF 12" CMP (W)	19.3	-	26.7	
DR 126	32+02.38	9.6	RT.	REMOVE MANHOLE AND FILL 268 FT OF 12" CMP WITH CLSM (E)	5.3	268	9.6	
DR 127	32+02.70	17.7	LT.	REMOVE CATCH BASIN AND REMOVE 4 FT OF 12" CMP (N)	4.8	-	8.0	
DR 128	32+02.87	23.6	LT.	REMOVE CATCH BASIN AND REMOVE 24 FT OF 12" CMP (N)	4.0	-	6.4	
DR 129	34+34.68	28.0	RT.	REMOVE CATCH BASIN AND REMOVE 55 FT OF 12" HDPE (N)	8.2	-	22.2	
DR 130	41+85.26	51.1	LT.	REMOVE CATCH BASIN AND REMOVE 21 FT OF 12" CMP (E)	3.1	-	9.9	
DR 130.5	41+50.00	27.0	LT.	REMOVE END SECTIONS (2) AND REMOVE 101 FT OF 12" CMP	14.3	-	35.5	
DR 131	42+09.33	48.0	LT.	REMOVE CATCH BASIN AND REMOVE 42 FT OF 12" CMP (SE)	6.9	-	18.1	
DR 131.5	44+12.00	43.0	RT.	REMOVE END SECTION AND REMOVE 108 FT OF 24"x36" CMP (E)	45.6	-	82.7	
DR 132	46+51.00	25.9	RT.	REMOVE CATCH BASIN AND PIPE	2.7	-	5.1	
DR 132.5	45+26.00	25.0	LT.	REMOVE END SECTION AND REMOVE 239 FT OF 12" CMP (E)	33.9	-	84.1	
DR 133	47+66.64	21.2	LT.	REMOVE CATCH BASIN AND REMOVE 197 FT OF 18" CMP (E)	89.8	-	139.9	
DR 134	49+66.14	19.3	LT.	REMOVE CATCH BASIN AND REMOVE 198 FT OF 21" CMP (E)	-	-	-	
DR 135	49+66.29	19.5	RT.	REMOVE CATCH BASIN AND REMOVE 198 FT OF 12" CMP (E)	-	-	-	
DR 136	51+66.36	19.0	LT.	REMOVE CATCH BASIN AND REMOVE 36 FT OF 21" CMP (S)	-	-	-	
DR 137	51+66.74	19.4	RT.	REMOVE CATCH BASIN AND REMOVE 33 FT OF 21" CMP (SE)	-	-	-	
DR 138	52+32.02	19.4	LT.	REMOVE CATCH BASIN AND REMOVE 63 FT OF 12" CMP (W)	20.6	-	36.1	
DR 139	52+33.20	19.4	RT.	REMOVE CATCH BASIN AND REMOVE 34 FT OF 18" CMP (SW)	-	-	-	
DR 140	53+67.33	19.4	RT.	REMOVE CATCH BASIN AND REMOVE 35 FT OF 12" CMP (S)	-	-	-	
DR 141	53+67.44	19.3	LT.	REMOVE CATCH BASIN AND REMOVE 131 FT OF 18" CMP (W)	-	-	-	
DR 142	55+67.51	19.4	RT.	REMOVE CATCH BASIN AND REMOVE 36 FT OF 12" CMP (S)	4.4	-	6.8	
DR 143	55+67.77	19.4	LT.	REMOVE CATCH BASIN AND REMOVE 198 FT OF15" CMP (W)	-	-	-	
DR 144	57+71.66	19.3	LT.	REMOVE CATCH BASIN AND REMOVE 202 FT OF 12" CMP (W)	61.6	-	106.4	
DR 145	57+72.03	19.4	RT.	REMOVE CATCH BASIN AND REMOVE 203 FT OF 12" CMP (W)	6.8	-	9.2	
DR 145.5	58+51.50	22.6	RT.	REMOVE MANHOLE AND REMOVE 76 FT OF 12" CMP (W)	78.5	-	98.6	
DR 146	59+71.86	19.4	LT.	REMOVE CATCH BASIN AND REMOVE 198 FT OF 12" CMP (W)	60.7	-	104.5	
DR 147	59+72.15	19.5	RT.	REMOVE CATCH BASIN AND REMOVE 117 FT OF 12" CMP (W)	115.6	-	142.4	
DR 147.5	60+51.66	21.0	LT.	REMOVE MANHOLE AND REMOVE 39 FT OF 12" CMP (S)	50.4	-	62.8	
DR 147.6	60+51.66	23.1	RT.	REMOVE MANHOLE AND REMOVE 77 FT OF 12" CMP (W)	-	-	-	
DR 148	62+20.21	42.2	RT.	REMOVE CATCH BASIN AND REMOVE 20 FT OF 12" CMP (NE)	10.9	-	17.4	
DR 148.5	62+34.41	24.3	RT.	REMOVE MANHOLE AND REMOVE 180 FT OF 12" CMP (W)	-	-	-	
DR 148.6	62+56.31	23.9	LT.	REMOVE MANHOLE AND REMOVE 201 FT OF 12" CMP (W)	84.9	-	131.3	
DR 149	62+73.00	67.7	LT.	REMOVE CATCH BASIN AND REMOVE 44 FT OF 12" CMP (SW)	18.2	-	29.7	
DR 150	63+18.31	73.7	LT.	REMOVE CATCH BASIN AND REMOVE 93 FT OF 12" CMP (SE)	25.1	-	47.0	
DR 151	63+34.29	21.2	RT.	REMOVE CATCH BASIN AND REMOVE 235 FT OF 12" CMP (E)	82.6	-	134.3	
DR 152	64+47.13	19.3	LT.	REMOVE CATCH BASIN AND REMOVE 188 FT OF 12' CMP (E)	55.2	-	97.0	
DR 153	65+71.90	19.3	RT.	REMOVE CATCH BASIN AND REMOVE 186 FT OF 12" CMP (E)	48.6	-	90.1	
DR 154	66+37.34	19.4	LT.	REMOVE CATCH BASIN AND REMOVE 187 FT OF 12" CMP (E)	57.0	-	98.7	
DR 155	67+61.16	19.5	RT.	REMOVE CATCH BASIN AND REMOVE 188 FT OF 12' CMP (E)	54.5	-	96.4	
DR 156	68+27.38	19.3	LT.	REMOVE CATCH BASIN AND REMOVE 186 FT OF 12" CMP (E)	-	-	-	
DR 157	69+52.51	19.2	RT.	REMOVE CATCH BASIN AND REMOVE 193 FT OF 15" CMP (E)	62.0	-	108.2	
DR 158	70+15.38	19.4	LT.	REMOVE CATCH BASIN AND REMOVE 26 FT OF 12" CMP (N)	-	-	-	
DR 159	71+47.72	19.4	RT.	REMOVE CATCH BASIN AND REMOVE 192 FT OF 15" CMP (E)	-	-	-	
DR 160	72+08.56	19.5	LT.	REMOVE CATCH BASIN AND REMOVE 181 FT OF 12" CMP (E)	-	-	-	
DR 161	73+42.40	19.4	RT.	REMOVE CATCH BASIN AND REMOVE 188 FT OF 18" CMP (E)	-	-	-	
DR 162	73+92.76	19.3	LT.	REMOVE CATCH BASIN AND REMOVE 176 FT OF 12" CMP (E)	-	-	-	
DR 163	75+32.37	19.4	RT.	REMOVE CATCH BASIN	-	-	-	
DR 164	75+72.42	19.3	LT.	REMOVE CATCH BASIN AND REMOVE 39 FT OF 12" CMP (NE)	-	-	-	
				TOTAL	1275.2	1371.0	2081.9	

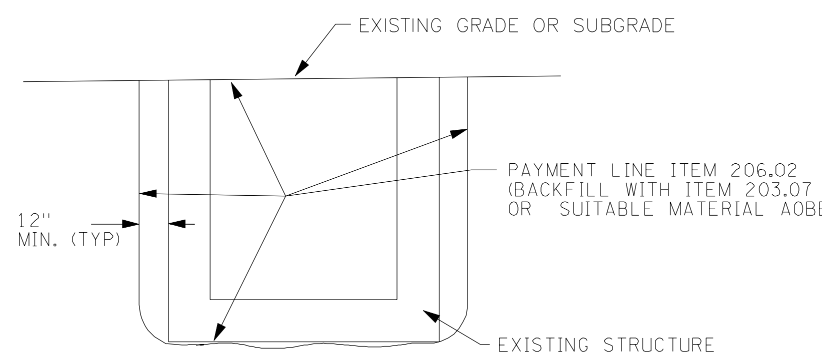

REMOVAL OF EXISTING DRAINAGE STRUCTURE

NTS

(SEE STRUCTURE AND PIPE REMOVAL TABLE THIS SHEET)

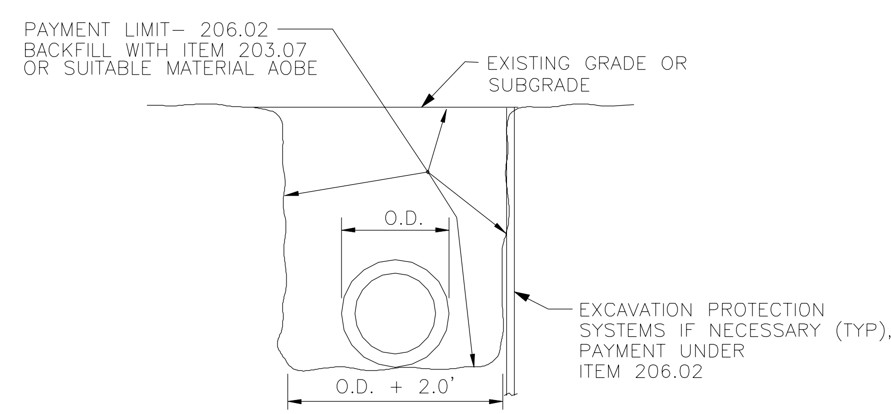

PIPE REMOVAL DETAIL

NTS

(SEE STRUCTURE AND PIPE REMOVAL TABLE THIS SHEET)

"I hereby certify by my signature and seal below, that I have prepared this record drawing which is, to the best of my knowledge and in my professional opinion, a true representation of the work as constructed on the Westfall Road Improvements Phase III, Project No. 1409."

STATE OF NEW YORK · MATTHEW J. SCHOLLEY · LICENSED PROFESSIONAL ENGINEER · No. 069983

NO.	DATE	BY:	REVISION
1	10/13	JBR	REVISED PIPE REMOVAL TABLE

Barton & Loguidice, P.C.

DESGIN BY: JMW
DRAFTED BY: JMW/JJB

DEPARTMENT OF TRANSPORTATION
50 WEST MAIN STREET, SUITE 6100
ROCHESTER, NEW YORK 14614-1231

UNAUTHORIZED ALTERATION OR ADDITION TO THIS DRAWING IS A VIOLATION OF THE NEW YORK STATE EDUCATION LAW ARTICLE 145, SECTION 7209

PROJECT NAME: WESTFALL ROAD
LIMITS: E. HENRIETTA ROAD TO LAC-DE-VILLE BLVD
TOWN: BRIGHTON
CITY: ROCHESTER
CAPITAL PROJECT NO.: 4753.77
BRIDGE IDENTIFICATION NO.: N.A.

DRAINAGE TABLES

SCALE:
DATE ISSUED: 4/25/2014
DRAWING NO. DT-5
SHEET NO. 33 OF 112

mek
I:\MicroStation\Workspace\PLOT\NYSDOT\NYSDOT_SIZE_B.TBL
I:\MicroStation\Workspace\Plot\NYSDOT\NYSDOT_HPLJ5200_B.plt

FILE NAME = I:\Shared\1000\1066005\AS-BUILTS\1066005_dt_05.dgn
DATE = 4/25/2014
TIME = 10:07:01 AM

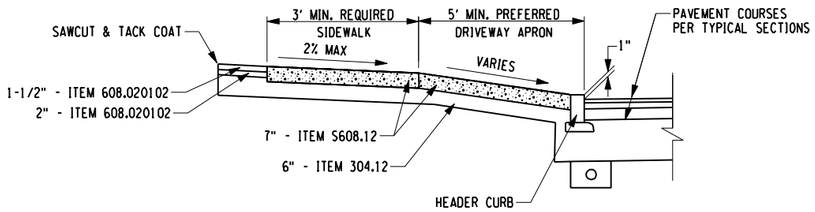

SECTION A-A

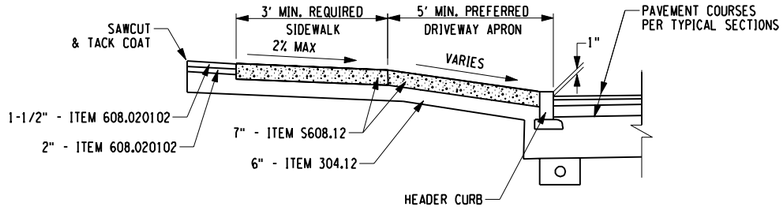

SECTION B-B

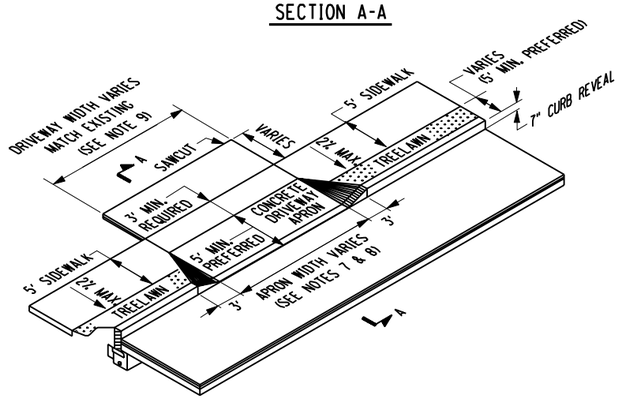

DRIVEWAY TYPE CITY 1
CONCRETE DRIVEWAY APRON WITH SIDEWALK & TREE LAWN (CITY)

NOT TO SCALE
MODIFIED
(SEE NOTE 9)

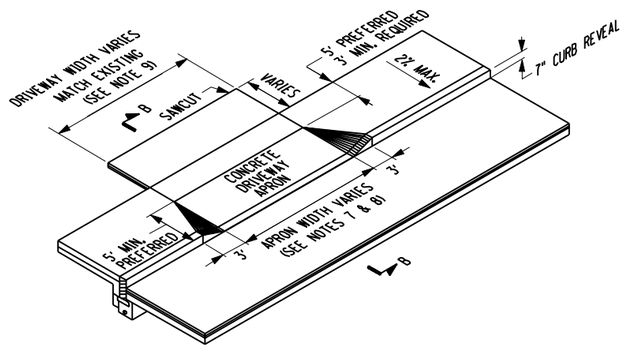

DRIVEWAY TYPE CITY 2
CONCRETE DRIVEWAY APRON WITH SIDEWALK (CITY)

NOT TO SCALE
MODIFIED
(SEE NOTE 9)

DRIVEWAY NOTES

1. TOPSOIL AND SEED ALL DISTURBED AREAS WITH TOPSOIL ITEM 613.02 AND SEED ITEM C610.0202.
2. EXPANSION JOINT MATERIAL TO BE PLACED AOBE.
3. USE 5' FOR RESIDENTIAL, USE 10' MAX OR AOBE FOR COMMERCIAL DRIVEWAYS AS REQUIRED FOR TRUCK TURNING ACCESS.
4. WIDTH OF DRIVEWAY APRONS AT THE ROW LINE SHALL MATCH EXISTING WIDTH.
5. IT IS DESIRABLE THAT DRIVEWAYS TO COUNTY ROADS BE PAVED TO THE RIGHT-OF-WAY LINE. THE DRIVEWAY SHALL SLOPE AWAY FROM THE OUTSIDE EDGE OF THE SHOULDER AT A MINIMUM OF 4.0% TO THE CENTERLINE OF DRAINAGE.
6. REPLACE PAVEMENT IN KIND WITH WHAT IS EXISTING, UNLESS CONDITIONS EXIST WHERE THAT IS NOT FEASIBLE, THEN INSTALL SECTION AS APPROVED BY THE DEPARTMENT'S ENGINEER OR HIGHWAY MANAGER. THE MINIMUM APPROVED SECTION SHALL CONSIST OF 6" SUBBASE ITEM 304.12, 2" BINDER ITEM 608.020102, AND 1-1/2" TOP ITEM 608.020102.
7. NOMINAL RESIDENTIAL DRIVEWAY APRON WIDTH IN THE CITY IS TO BE BETWEEN 10 FEET AND 15 FEET, NOT INCLUDING TRANSITION AREAS. ACTUAL WIDTH WILL BE AS APPROVED OF BY CITY.
8. NOMINAL MAXIMUM WIDTH OF COMMERCIAL DRIVEWAY APRON IN THE CITY IS TO BE 24 FEET. ACTUAL WIDTH WILL BE AS APPROVED OF BY CITY.
9. REFER TO TABLE OF DRIVEWAYS ON DWG. MT-2 FOR DRIVEWAY LOCATIONS AND DIMENSIONS.

"I hereby certify by my signature and seal below, that I have prepared this record drawing which is, to the best of my knowledge and in my professional opinion, a true representation of the work as constructed on the Westfall Road Improvements Phase III, Project No. 1409."

STATE OF NEW YORK · MATTHEW J. SCHARLETT · 069983 · LICENSED PROFESSIONAL ENGINEER

NO AS-BUILT REVISIONS

NO.	DATE	BY:	REVISION

Barton & Loguidice, P.C.

DRAFTED BY: JMW/JJB
DESIGN BY: JMW

DEPARTMENT OF TRANSPORTATION
50 WEST MAIN STREET, SUITE 6100
ROCHESTER, NEW YORK 14614-1231

UNAUTHORIZED ALTERATION OR ADDITION TO THIS DRAWING IS A VIOLATION OF THE NEW YORK STATE EDUCATION LAW ARTICLE 145, SECTION 7209

PROJECT NAME: WESTFALL ROAD
LIMITS: E. HENRIETTA ROAD TO LAC-DE-VILLE BLVD
TOWN: CITY
BRIGHTON
ROCHESTER
CAPITAL PROJECT NO.: 4753.77
BRIDGE IDENTIFICATION NO.: N.A.

MISCELLANEOUS DETAILS

SCALE:
DATE ISSUED: 4/25/2014
DRAWING NO. MD-1
SHEET NO. 34 OF 112

mek
I:\MicroStation\Workspace\PLOT\NYSDOT\NYSDOT_SIZE_B.TBL
I:\MicroStation\Workspace\Plot\NYSDOT\NYSDOT_HPLJ5200_B.plt

FILE NAME = I:\Shared\1000\1066005\AS-BUILTS\1066005_md_01.dgn
DATE = 4/25/2014
TIME = 10:07:49 AM

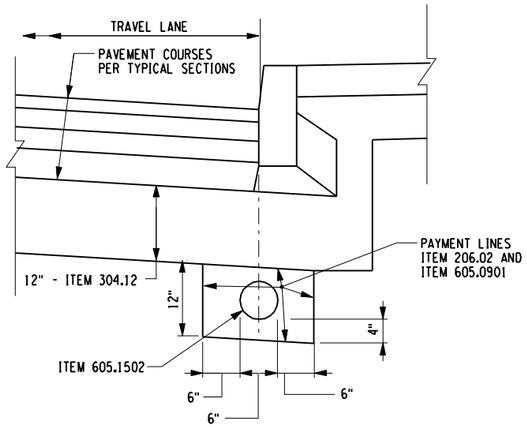

UNDERDRAIN DETAIL

NOT TO SCALE
(REFER TO DWG. MT-2 FOR UNDERDRAIN OUTLET LOCATIONS)

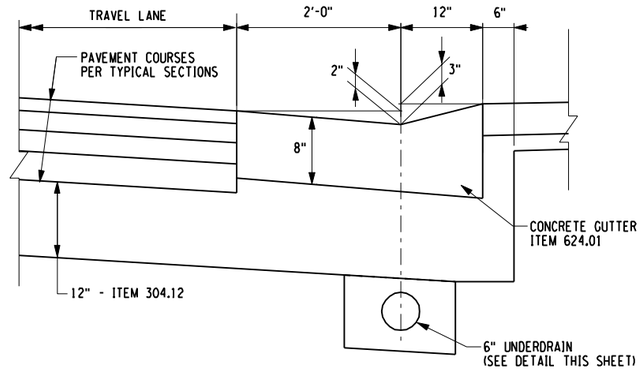

CONCRETE GUTTER DETAIL

NOT TO SCALE
(REFER TO DWG. MT-2 FOR LOCATIONS)

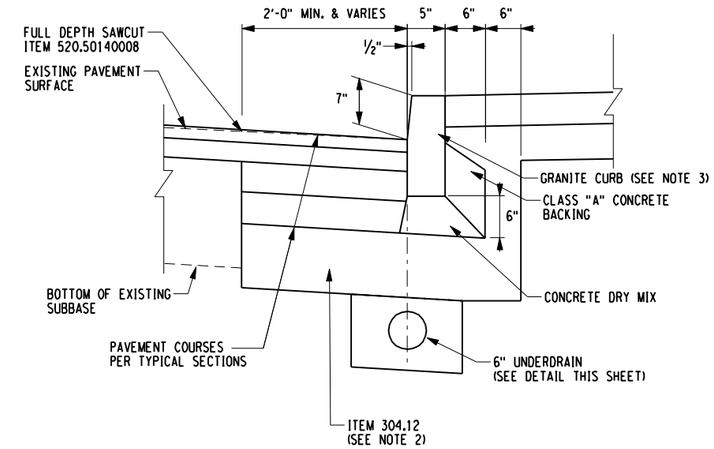

GRANITE CURB REPLACEMENT/RELOCATION DETAIL

NOT TO SCALE
(REFER TO DWG. MT-3 FOR GRANITE CURB LOCATIONS)

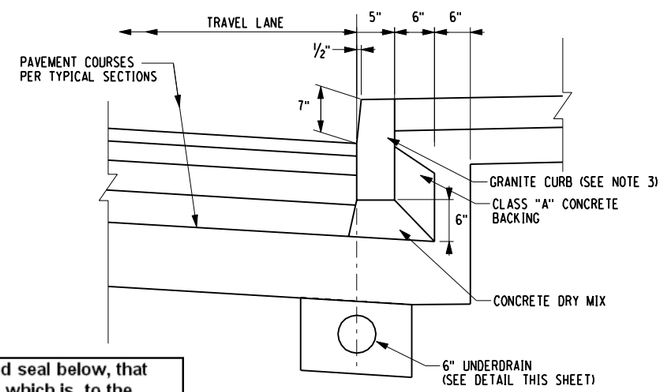

GRANITE CURB DETAIL

NOT TO SCALE
(REFER TO DWG. MT-2 FOR GRANITE CURB LOCATIONS)

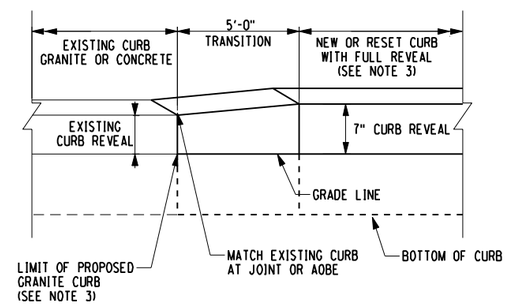

GRANITE CURB TRANSITION
(SIDE STREETS WITH CURBS AND MAJOR DRIVEWAYS)

NOT TO SCALE

"I hereby certify by my signature and seal below, that I have prepared this record drawing which is, to the best of my knowledge and in my professional opinion, a true representation of the work as constructed on the Westfall Road Improvements Phase III, Project No. 1409."

STATE OF NEW YORK · MATTHEW J. SCHOLEY · No. 069983 · LICENSED PROFESSIONAL ENGINEER

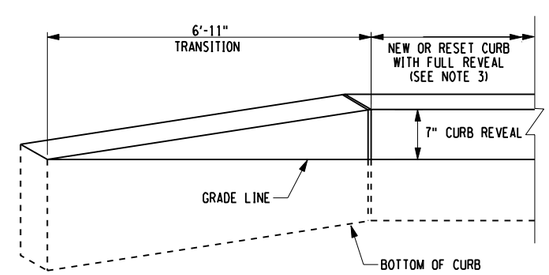

GRANITE CURB TERMINATION

NOT TO SCALE

GRANITE CURB NOTES

2. SUBBASE SHALL EXTEND 2" BELOW ADJACENT BOTTOM OF EXISTING SUBBASE OR 12" DEEP, WHICHEVER IS GREATER.
3. REFER TO DWG. MT-2 FOR GRANITE CURB LOCATIONS AND ITEM NUMBERS.

NO.	DATE	BY:	REVISION
NO AS-BUILT REVISIONS			

Barton & Loguidice, P.C.

DRAFTED BY: JMW/JJB
DESIGN BY: JMW

DEPARTMENT OF TRANSPORTATION
50 WEST MAIN STREET, SUITE 6100
ROCHESTER, NEW YORK 14614-1231

UNAUTHORIZED ALTERATION OR ADDITION TO THIS DRAWING IS A VIOLATION OF THE NEW YORK STATE EDUCATION LAW ARTICLE 145, SECTION 7209

PROJECT NAME: WESTFALL ROAD
LIMITS: E. HENRIETTA ROAD TO LAC-DE-VILLE BLVD
TOWN: BRIGHTON
CITY: ROCHESTER
CAPITAL PROJECT NO.: 4753.77
BRIDGE IDENTIFICATION NO.: N.A.

MISCELLANEOUS DETAILS

SCALE: NOT TO SCALE
DATE ISSUED: 4/25/2014
DRAWING NO. MD-2
SHEET NO. 35 OF 112

mek
I:\MicroStation\Workspace\PLOT\NYSDOT\NYSDOT_SIZE_B.TBL
I:\MicroStation\Workspace\Plot\NYSDOT\NYSDOT_HPLJ5200_B.plt

FILE NAME = I:\Shared\1000\1066005\AS-BUILTS\1066005_md_02.dgn
DATE = 4/25/2014
TIME = 10:08:08 AM

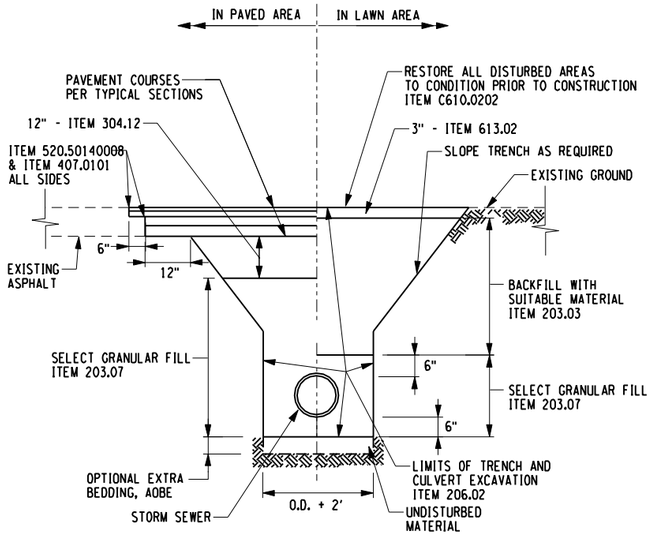

STORM SEWER TRENCH

NOT TO SCALE
(REFER TO DWGS. DT-1 THROUGH DT-4
FOR STORM SEWER LOCATIONS)

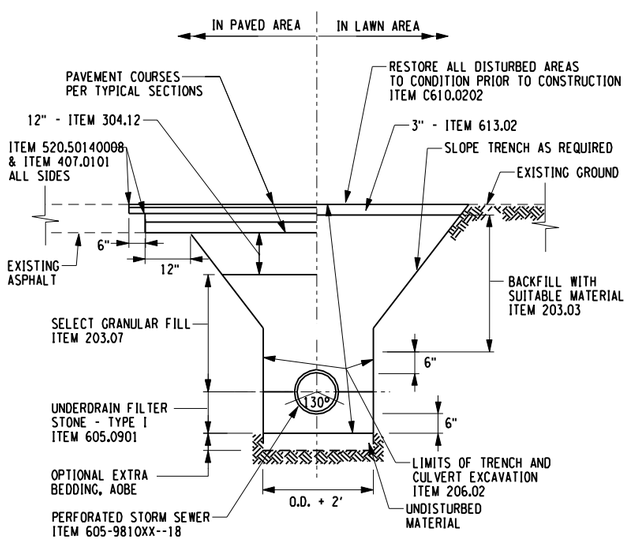

TRENCH NOTES

1. REMOVE EXISTING PAVEMENT AND PAVEMENT SUBBASE UNDER ITEM 203.02
2. WHERE STORM SEWER CROSSES PREVIOUSLY INSTALLED SANITARY SEWER, WATER OR GAS MAIN, ETC. TRENCH SHALL BE EXCAVATED DOWN TO THE PREVIOUSLY LAID UTILITY AND BACKFILLED WITH #2 CRUSHED STONE COMPACTED IN 6" LIFTS TO INSURE ADEQUATE SUPPORT.
3. SLOPE, SHEETING & BRACING PER OSHA SPECIFICATIONS. TRENCH SHIELD OR SHEETING TO BE LIFTED ABOVE THE SPRING LINE.

PERFORATED STORM SEWER TRENCH

NOT TO SCALE
(REFER TO DWGS. DT-1 THROUGH DT-4
FOR STORM SEWER LOCATIONS)

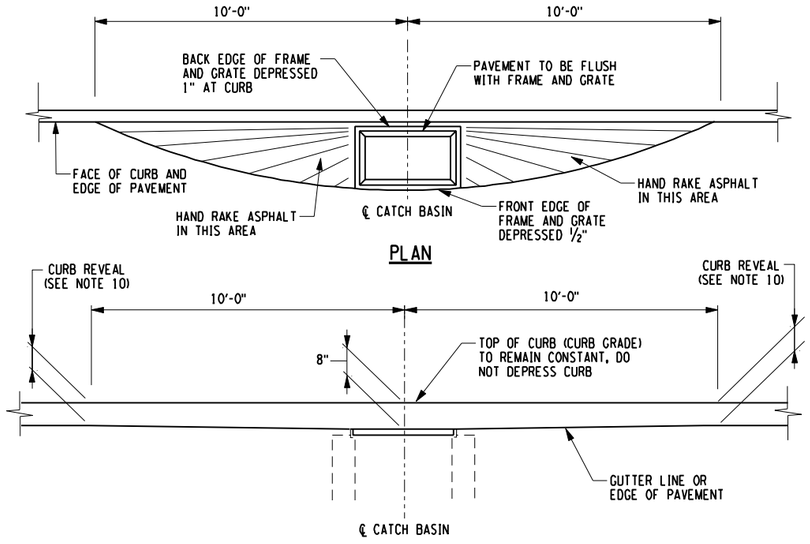

DROP INLET PAVING DETAIL

NOT TO SCALE
(REFER TO DWGS. DT-1 THROUGH DT-3
FOR INLET LOCATIONS)

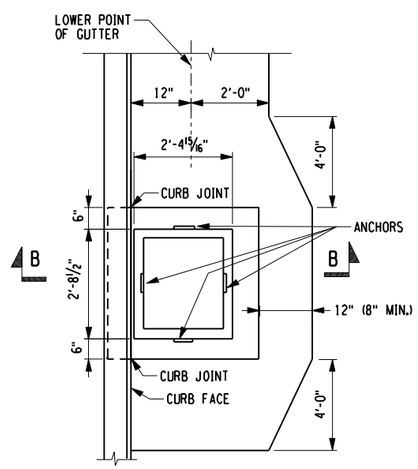

PLAN FOR 18" OR LESS PIPE

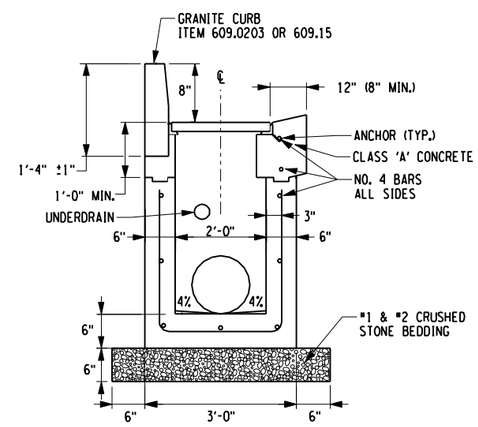

SECTION B-B

DROP INLET TYPE 'S' PRE-CAST WITH GUTTER AND CURB

NOT TO SCALE
(REFER TO DWGS. DT-1 THROUGH DT-3
FOR INLET LOCATIONS)

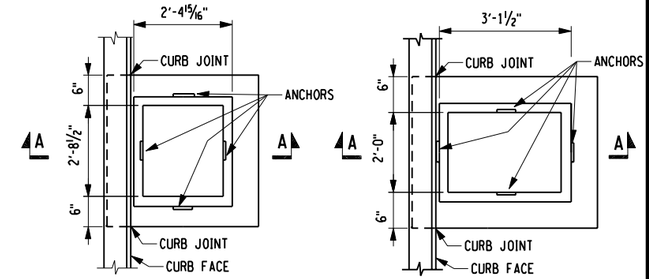

PLAN FOR 18" OR LESS PIPE

PLAN FOR PIPE GREATER THAN 18" UP TO 24" PIPE

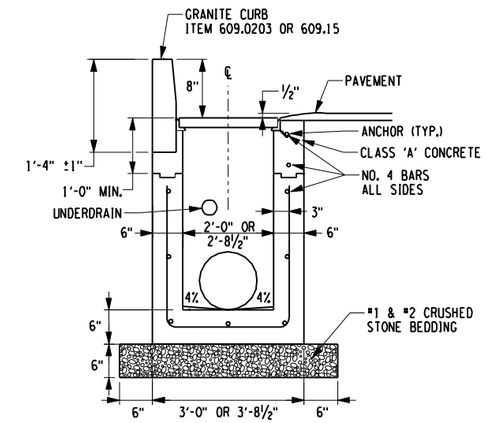

SECTION A-A

DROP INLET TYPE 'S' PRE-CAST AGAINST CURB

NOT TO SCALE
(REFER TO DWGS. DT-1 THROUGH DT-4
FOR INLET LOCATIONS)

DROP INLET NOTES

1. PAYMENT UNDER ITEM 604.301911 - RECTANGULAR DRAINAGE STRUCTURE TYPE S FOR #11 WELDED FRAME & ITEM 655.1011 - WELDED FRAME AND RECTANGULAR GRATE NO. 11 - SEE NYSDOT STANDARD SHEETS 604-02 & 655-01.
2. REINFORCEMENT SHALL HAVE A COVER OF 2" UNLESS OTHERWISE SHOWN. THE COST OF ALL BAR REINFORCEMENT SHALL BE INCLUDED IN THE PRICE BID FOR DRIP INLETS. ALL BAR REINFORCEMENT IN THE PRE-CAST STRUCTURE SHALL BE ACCORDING TO NYSDOT STANDARD SHEET 604-5.
3. ALL CONCRETE FOR DROP INLETS SHALL BE CLASS "A". BENCHES SHALL BE CAST-IN-PLACE ON ALL DROP INLETS REGARDLESS OF PIPE DIAMETER. COST TO BE INCLUDED IN DROP INLET ITEM.
4. FILL 1 FRAME
5. WHERE HIGH I INSTAI RESIN
6. ALL P
7. INTERI
8. REFER
9. STEPS

"I hereby certify by my signature and seal below, that I have prepared this record drawing which is, to the best of my knowledge and in my professional opinion, a true representation of the work as constructed on the Westfall Road Improvements Phase III, Project No. 1409."

STATE OF NEW YORK · MATTHEW J. SCHOLLER · No. 069983 · LICENSED PROFESSIONAL ENGINEER

NO AS-BUILT REVISIONS

NO.	DATE	BY:	REVISION

Barton & Loguidice, P.C.

DRAFTED BY: JMW/JJB
DESIGN BY: JMW

DEPARTMENT OF TRANSPORTATION
50 WEST MAIN STREET, SUITE 6100
ROCHESTER, NEW YORK 14614-1231

UNAUTHORIZED ALTERATION OR ADDITION TO THIS DRAWING IS A VIOLATION OF THE NEW YORK STATE EDUCATION LAW ARTICLE 145, SECTION 7209

PROJECT NAME	WESTFALL ROAD
LIMITS	E. HENRIETTA ROAD TO LAC-DE-VILLE BLVD
TOWN	BRIGHTON
CITY	ROCHESTER
CAPITAL PROJECT NO.	4753.77
BRIDGE IDENTIFICATION NO.	N.A.

MISCELLANEOUS DETAILS

SCALE:	
DATE ISSUED:	4/25/2014
DRAWING NO.	MD-3A
SHEET NO.	36 OF 112

mek
I:\MicroStation\Workspace\PLOT\NYSDOT\NYSDOT_SIZE_B.TBL
I:\MicroStation\Workspace\Plot\NYSDOT\NYSDOT_HPLJ5200_B.plt

FILE NAME = I:\Shared\1000\1066005\AS-BUILTS\1066005_md_03.dgn
DATE = 4/25/2014
TIME = 10:08:30 AM

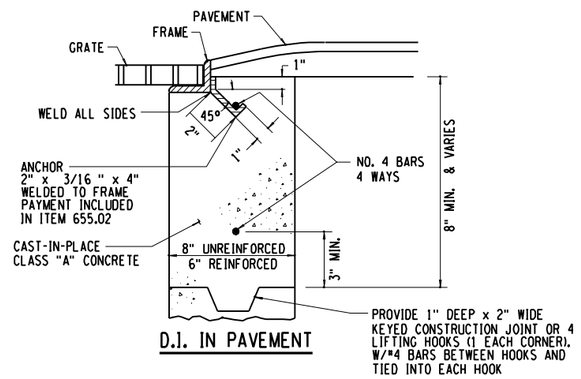

D.I. IN PAVEMENT

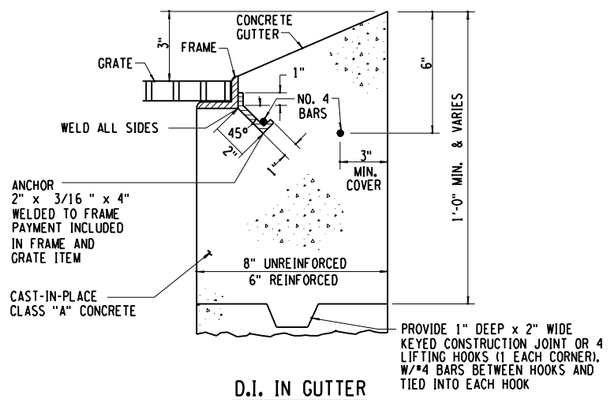

D.I. IN GUTTER

FRAME & GRATE ANCHORS

NOT TO SCALE

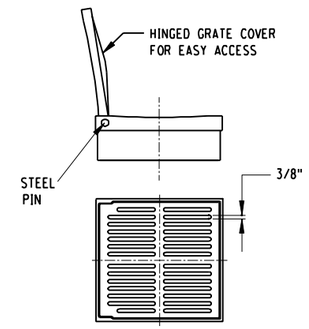

PEDESTRIAN (H-10) RATED
DRAIN AREA = 51.0 SQ IN

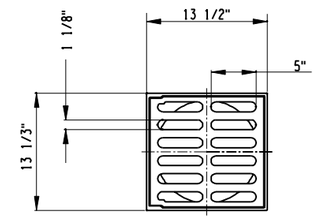

STANDARD (H-25) RATED
DRAIN AREA = 60.6 SQ IN

MATERIAL: CAST IRON
QUALITY: MATERIAL SHALL CONFORM
TO ASTM A48 - CLASS 30B
PAINT : CASTINGS ARE FURNISHED
WITH A BLACK PAINT

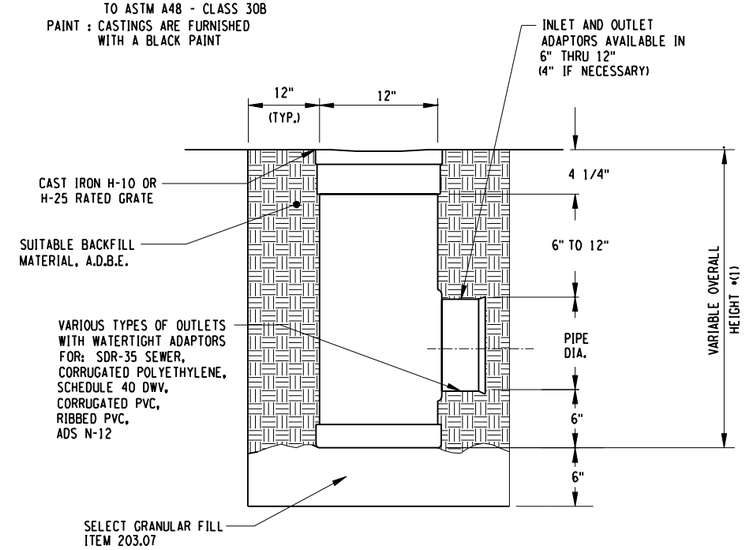

FIELD INLET-STAND PIPE 12"

ITEM 604.500401
NOT TO SCALE
(REFER TO DWGS. DT-1 THROUGH DT-4
FOR LOCATIONS)

*(1) MAXIMUM
RECOMMENDED
OVERALL HEIGHT 10'

"I hereby certify by my signature and seal below, that I have prepared this record drawing which is, to the best of my knowledge and in my professional opinion, a true representation of the work as constructed on the Westfall Road Improvements Phase III, Project No. 1409."

STATE OF NEW YORK
MATTHEW J. SCHUELER
No. 069983
LICENSED PROFESSIONAL ENGINEER

NO AS-BUILT REVISIONS

NO.	DATE	BY:	REVISION

Barton & Loguidice, P.C.

DRAFTED BY: JMW/JJB
DESIGN BY: JMW

DEPARTMENT OF TRANSPORTATION
50 WEST MAIN STREET, SUITE 6100
ROCHESTER, NEW YORK 14614-1231

UNAUTHORIZED ALTERATION OR ADDITION TO THIS DRAWING IS A VIOLATION OF THE NEW YORK STATE EDUCATION LAW ARTICLE 145, SECTION 7209

PROJECT NAME: WESTFALL ROAD
LIMITS: E. HENRIETTA ROAD TO LAC-DE-VILLE BLVD
TOWN: BRIGHTON
CITY: ROCHESTER
CAPITAL PROJECT NO.: 4753.77
BRIDGE IDENTIFICATION NO.: N.A.

MISCELLANEOUS DETAILS

SCALE: NOT TO SCALE
DATE ISSUED: 4/25/2014
DRAWING NO. MD-3B
SHEET NO. 37 OF 112

mek
I:\MicroStation\Workspace\PLOT\NYSDOT\NYSDOT_SIZE_B.TBL
I:\MicroStation\Workspace\Plot\NYSDOT\NYSDOT_HPLJ5200_B.plt
FILE NAME = I:\Shared\1000\1066005\AS-BUILTS\1066005_md_03b.dgn
DATE = 4/25/2014
TIME = 10:08:56 AM

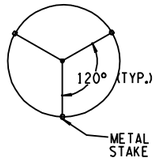

DETAIL "A"

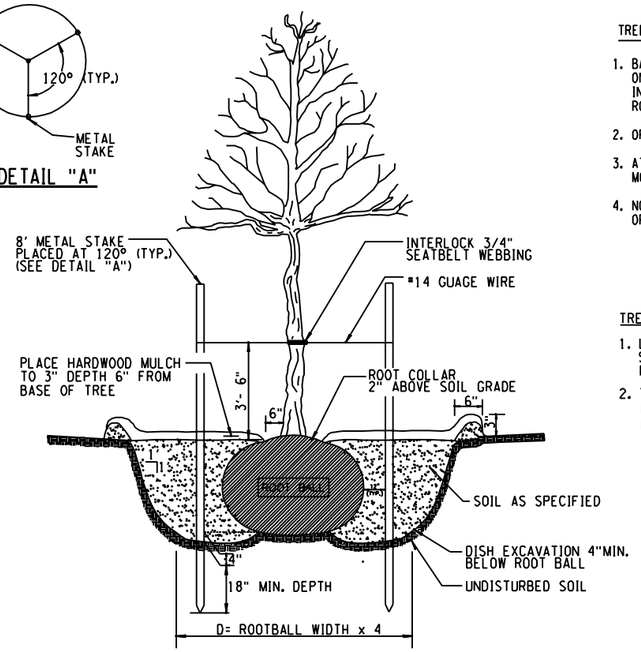

TREE PLANTING

ITEM 611.010154
NOT TO SCALE
(REFER TO DWG. MT-3 FOR PLANTING TABLE)

TREE PROTECTION NOTES:

1. BARRIER SHALL BE 16.0' x 16.0' SQUARE CENTERED ON TREE. WHEN OBSTRUCTED, BARRIER SHALL BE INSTALLED TO PROVIDE THE MAXIMUM POSSIBLE AREA OF ROOT PROTECTION.
2. ORIENT ACCESS AWAY FROM STREET.
3. AT NO TIME SHALL ANY BARRIER BE REMOVED OR MOVED TO ALLOW EQUIPMENT ACCESS.
4. NO STOCKPILING OF ANY MATERIAL WITHIN BARRIER OR UNDER DRIP LINE OF TREE.

TREE PLANTING NOTES:

1. LOOSEN AND BLEND THE SOIL IN THE ENTIRE PLANTING AREA.
2. THE PLANTING PIT SHALL BE 4 TIMES THE BALL DIAMETER.

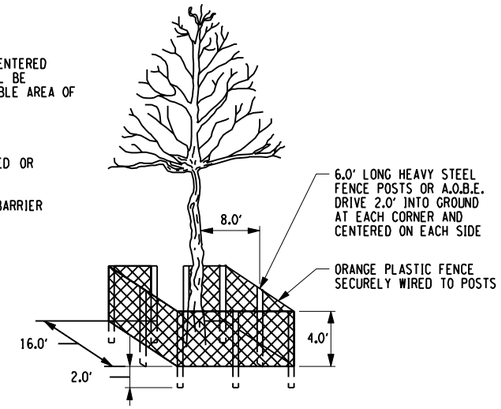

ISOMETRIC VIEW

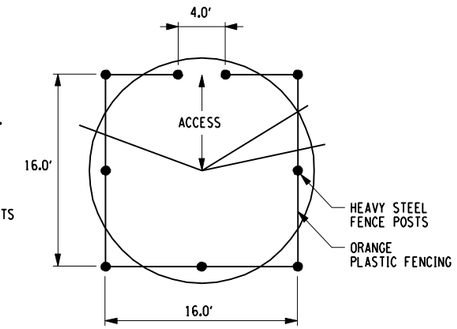

PLAN VIEW

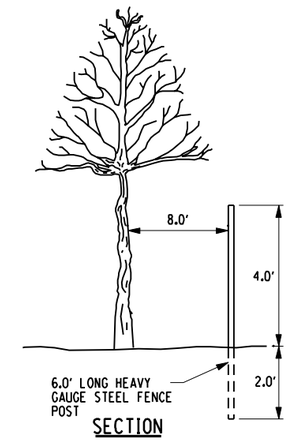

SECTION

TREE PROTECTION BARRIER

ITEM 615.04020008
NOT TO SCALE
(REFER TO DWG. MT-2 FOR TREE PROTECTION TABLE)

"I hereby certify by my signature and seal below, that I have prepared this record drawing which is, to the best of my knowledge and in my professional opinion, a true representation of the work as constructed on the Westfall Road Improvements Phase III, Project No. 1409."

STATE OF NEW YORK · MATTHEW J. SCHOLEY · LICENSED PROFESSIONAL ENGINEER · No. 069983

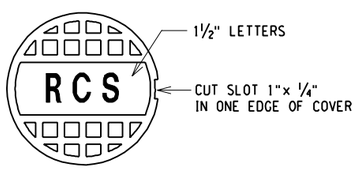

MONUMENT COVER

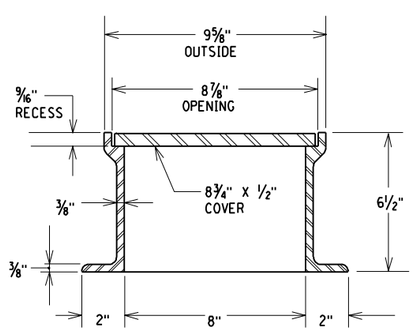

CAST IRON FRAME AND COVER

ITEM 625.070500M0
NOT TO SCALE
REFER TO DWG. MT-1 FOR LOCATIONS

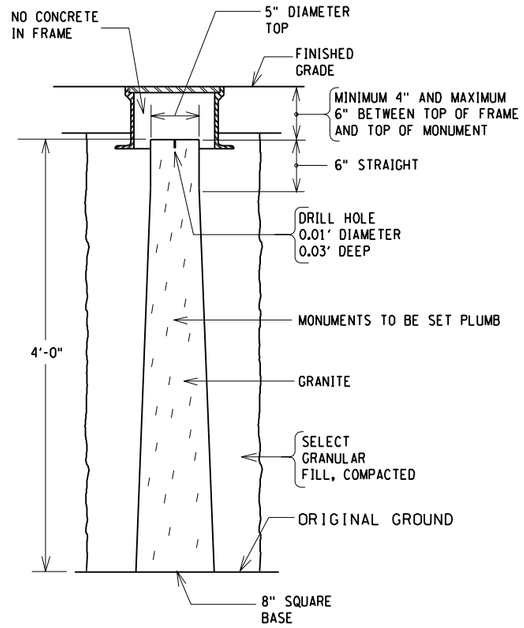

HORIZONTAL CONTROL MONUMENT (RCS)

ITEM 625.070100M0
NOT TO SCALE
REFER TO DWG. MT-1 FOR LOCATIONS

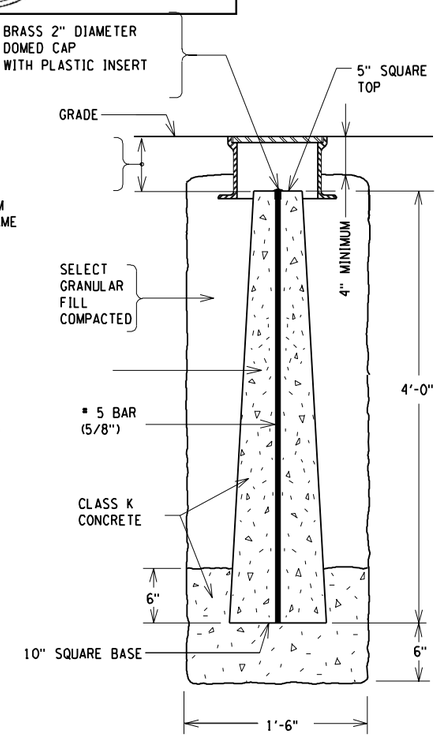

VERTICAL CONTROL MONUMENT (RTS)

ITEM 625.070200M0
NOT TO SCALE
REFER TO DWG. MT-1 FOR LOCATIONS

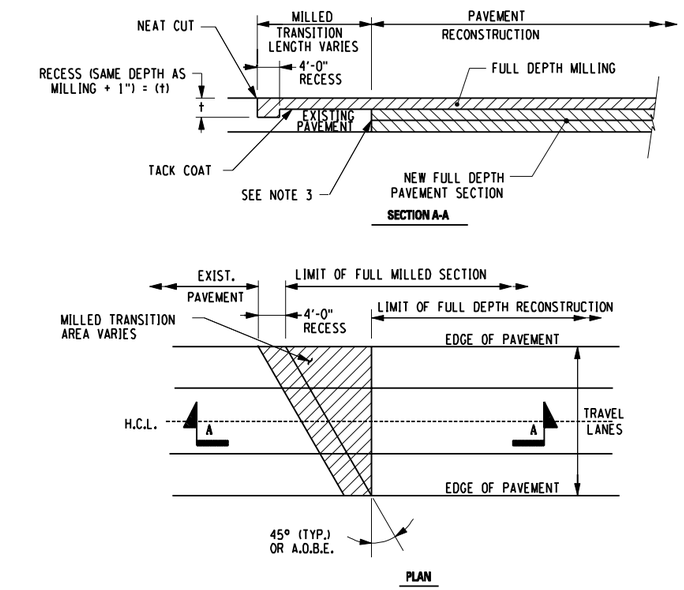

PAVEMENT TERMINATION NOTES:

1. THE COST OF ALL WORK ASSOCIATED WITH PAVEMENT TERMINATION (NEAT CUT, TACK COAT, PAVEMENT REMOVAL) SHALL BE INCLUDED IN THE PRICE BID FOR THE VARIOUS ASPHALT ITEMS. TACK COAT SHALL MEET THE REQUIREMENTS OF SECTION 702 OF THE NYSDOT STANDARD SPECIFICATIONS, LATEST REVISION.
2. IF BINDER COURSE IS LEFT EXPOSED OVER WINTER, IT SHALL BE KEYED INTO THE EXISTING PAVEMENT WITH AN 3" DEEP RECESS.
3. IN THE TRANSITION AREA, PAVEMENT COURSES OTHER THAN THE TOP COURSE SHALL BE FEATHERED OUT USING THE APPROPRIATE MATERIAL. PAYMENT SHALL BE MADE UNDER THE APPROPRIATE ITEM.

PAVEMENT TERMINATION FOR MILLING AND RECONSTRUCTION

NOT TO SCALE

NO AS-BUILT REVISIONS

NO.	DATE	BY:	REVISION

Barton & Loguidice, P.C.

DRAFTED BY: JMW/JJB
DESIGN BY: JMW

DEPARTMENT OF TRANSPORTATION
50 WEST MAIN STREET, SUITE 6100
ROCHESTER, NEW YORK 14614-1231

UNAUTHORIZED ALTERATION OR ADDITION TO THIS DRAWING IS A VIOLATION OF THE NEW YORK STATE EDUCATION LAW ARTICLE 145, SECTION 7209

PROJECT NAME: WESTFALL ROAD
LIMITS: E. HENRIETTA ROAD TO LAC-DE-VILLE BLVD
TOWN: BRIGHTON
CITY: ROCHESTER
CAPITAL PROJECT NO.: 4753.77
BRIDGE IDENTIFICATION NO.: N.A.

MISCELLANEOUS DETAILS

SCALE: NOT TO SCALE
DATE ISSUED: 4/25/2014
DRAWING NO. MD-4
SHEET NO. 38 OF 112

mek
I:\MicroStation\Workspace\PLOT\NYSDOT\NYSDOT_SIZE_B.TBL
I:\MicroStation\Workspace\Plot\NYSDOT\NYSDOT_HPLJ5200_B.plt

FILE NAME = I:\Shared\1000\1066005\AS-BUILTS\1066005_md_04.dgn
DATE = 4/25/2014
TIME = 10:09:19 AM

The Word "SEWER" And The Letters "MC–PW" In Letters Not Less Than 2–Inches High Shall Be Cast Into Manhole Covers.

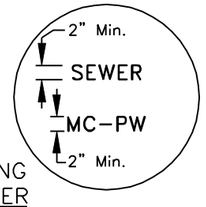

LETTERING ON COVER

MINIMUM MANHOLE DIAMETERS

# Of Connections	PIPE DIAMETERS 8"	10"	12"	15"	16"	18"	21"	24"	30"	36"	42" & Up
One	4'	4'	4'	4'	4'	4'	4'	4'	5'	5'	Requires Special Manhole
Two	4'	4'	4'	4'	4'	4'	4'	4'	5'	5'	
Three	4'	4'	4'	4'	4'	4'	5'	5'	5'	5'	
Four	4'	4'	4'	5'	5'	5'	5'	5'	5'	5'	

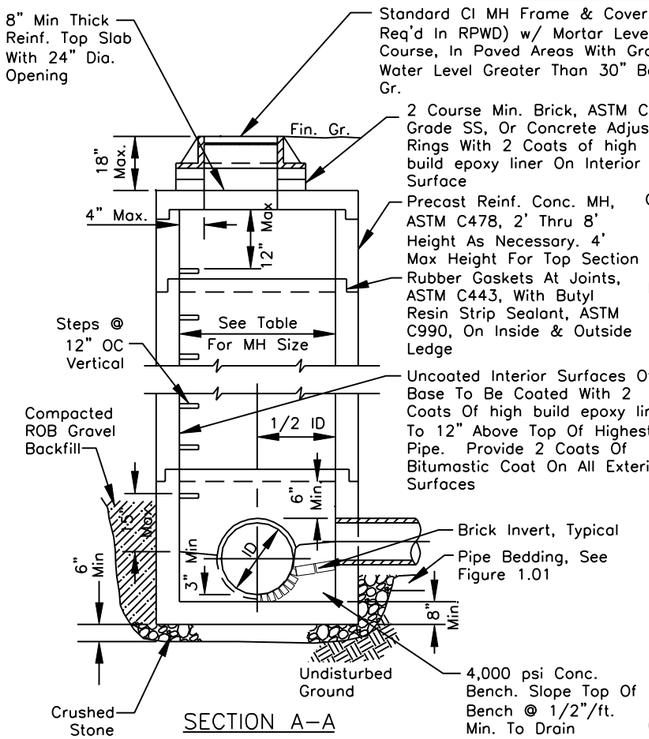

SECTION A–A

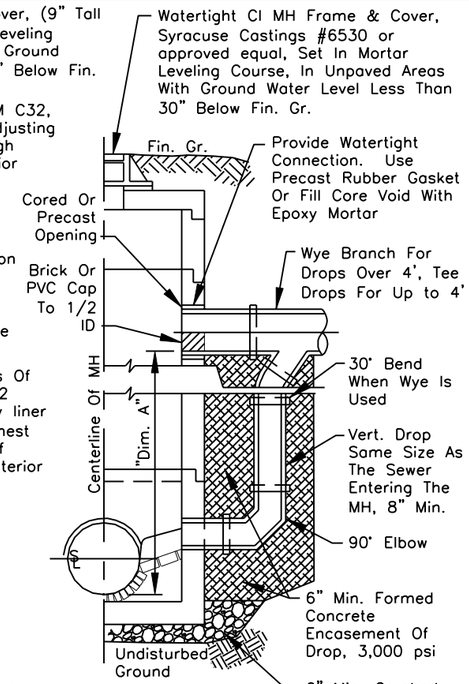

SECTION A–A

(FOR OUTSIDE DROP CONNECTION & WATERTIGHT MH FRAME & COVER)

Where Dim. "A" Is Equal To Or Greater Than 2' For Sanitary Sewers, Or Equal To Or Greater Than 5' For Storm Sewers

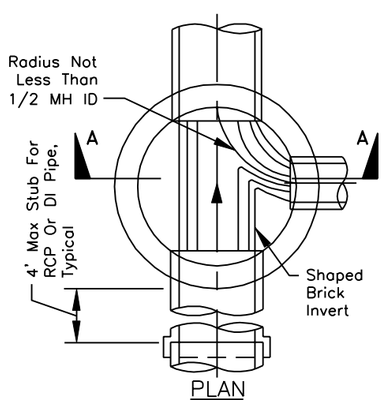

PLAN

NOTES:

1. The crown of the influent sewer(s) should be at the same level or above the crown of the outlet sewer.
2. Concrete for structure shall have a minimum 28 day compressive strength of 4,000 psi.
3. Pipe connection to manhole shall be precast opening with flexible boot connector, or field cored opening. Cored openings in manhole riser sections shall be not less than 6–inches from a riser joint.
4. All riser joints shall be rubber ring gaskets conforming to ASTM C443, with butyl resin strip sealant on the inside and outside ledge of joints.
5. Riser sections & top slabs shall conform with ASTM C478, with HS–20 loading design.
6. Inverts shall be constructed with brick, ASTM C32, grade SS, s in the direction of flow.
7. This detail applies to Pure Waters sanitary, storm, and combin

MANHOLE DETAILS WITH PRECAST REINFORCED CONCRETE BASE (RPWD)

RPWD FIG 2.01 (3-07) REVISED
PAYMENT UNDER
ITEMS 604.4048 & 655.1202

"I hereby certify by my signature and seal below, that I have prepared this record drawing which is, to the best of my knowledge and in my professional opinion, a true representation of the work as constructed on the Westfall Road Improvements Phase III, Project No. 1409."

STATE OF NEW YORK · MATTHEW J. SCHADLEY · No. 069983 · LICENSED PROFESSIONAL ENGINEER

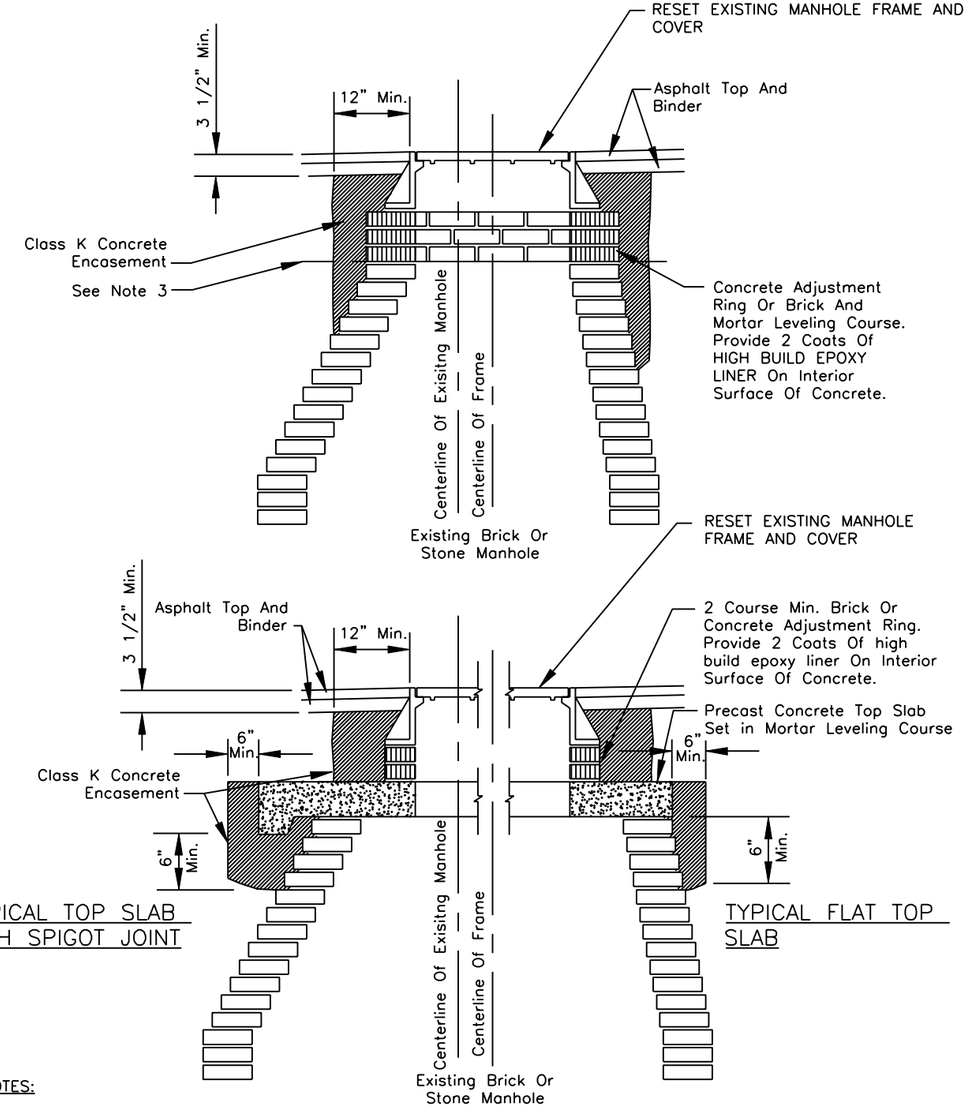

TYPICAL TOP SLAB WITH SPIGOT JOINT

TYPICAL FLAT TOP SLAB

NOTES:

1. Provide appropriate measures to prevent surface water, mud, and foreign material from entering the sewer system during construction, by plugging, pumping, bailing, and other work as necessary.
2. Remove/Add courses of brick/block, or install concrete adjustment ring to retrofit manhole frame and cover onto existing manhole riser at the required finished grade.
3. The lower limit of the Class K concrete encasement shall be at, or below, the lowest portion of the leveling course.
4. Brick for frame leveling course, ASTM C32, Grade SS.

)T–1 to DT–4 for sanitary and storm sewer rim elevations.

MANHOLE FRAME AND COVER ADJUSTMENT FOR BRICK AND STONE STRUCTURES

RPWD FIG 2.04 (3-07) REVISED
PAYMENT UNDER ITEM 655.05010010

Former City of Rochester Std. Dwg. No. R604–10

NO AS-BUILT REVISIONS

NO.	DATE	BY:	REVISION

Barton & Loguidice, P.C.

DRAFTED BY: JMW/JJB
DESIGN BY: JMW

DEPARTMENT OF TRANSPORTATION
50 WEST MAIN STREET, SUITE 6100
ROCHESTER, NEW YORK 14614-1231

UNAUTHORIZED ALTERATION OR ADDITION TO THIS DRAWING IS A VIOLATION OF THE NEW YORK STATE EDUCATION LAW ARTICLE 145, SECTION 7209

PROJECT NAME: WESTFALL ROAD
LIMITS: E. HENRIETTA ROAD TO LAC-DE-VILLE BLVD
TOWN: BRIGHTON
CITY: ROCHESTER
CAPITAL PROJECT NO.: 4753.77
BRIDGE IDENTIFICATION NO.: N.A.

MISCELLANEOUS DETAILS (PURE WATERS)

SCALE: NOT TO SCALE
DATE ISSUED: 4/25/2014
DRAWING NO. MD-5a
SHEET NO. 39 OF 112

FILE NAME = L:\Shared\1000\1066005\AS-BUILTS\1066005_md_05a.dgn
DATE = 4/25/2014
TIME = 10:09:53 AM

mek
L:\MicroStation\Workspace\PLOT\NYSDOT\NYSDOT_SIZE_B.TBL
L:\MicroStation\Workspace\Plot\NYSDOT\NYSDOT_HPLJ5200_B.plt

	Y
TYPE A	1'-10 1/2"
TYPE B	2'-8 1/2"

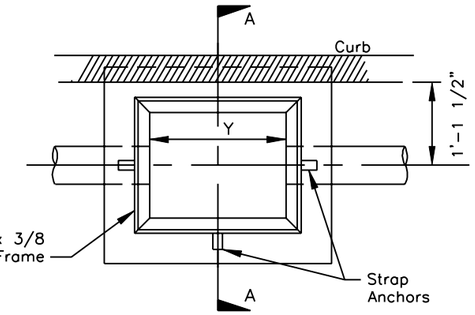

PLAN

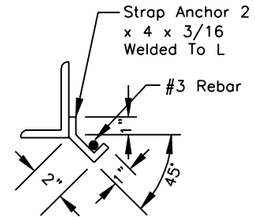

ANCHOR DETAIL

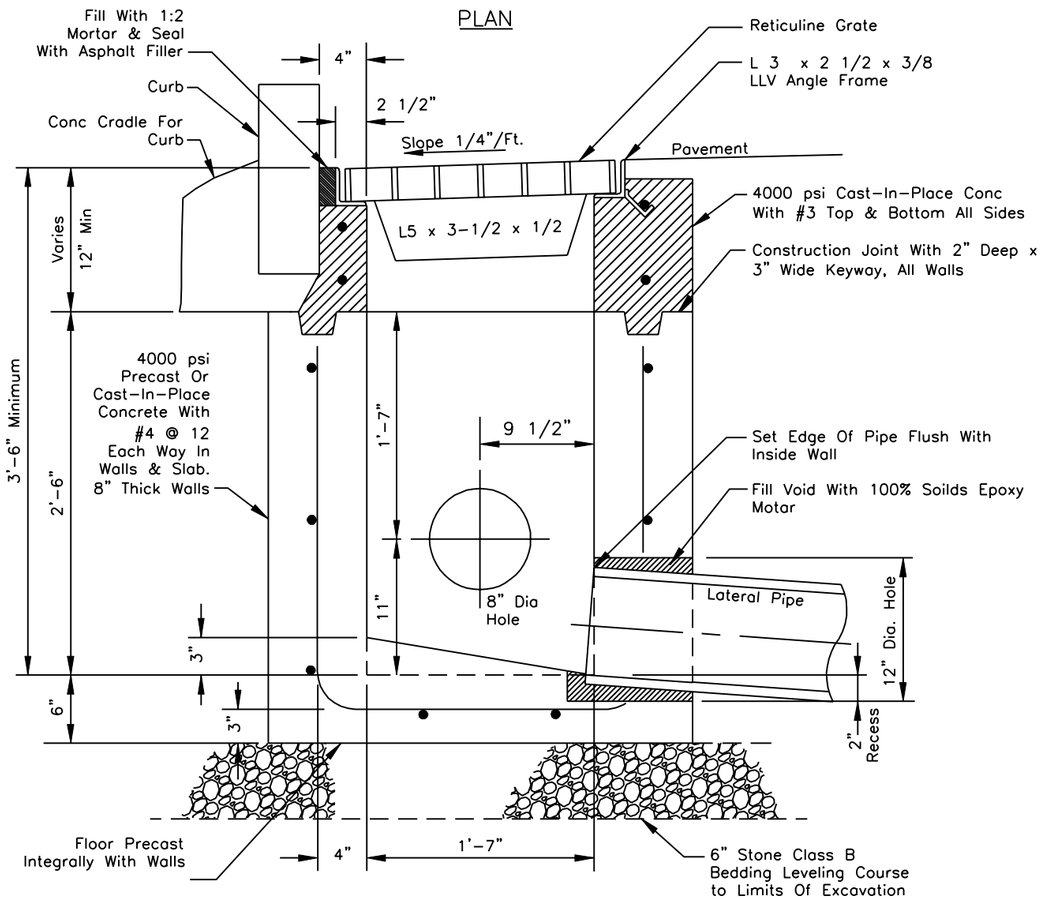

SECTION A-A

NOTES:

1. Coat interior of catch basin with 2 coats of HIGH BUILD EPOXY LINER.
2. Coat exterior of catch basin with 2 coats of bituminous coating.

Former C
Std. Dwg

TYPE A & B
CATCH BASIN (RPWD)

RPWD FIG 6.01 (3-07)
REVISED
PAYMENT UNDER
ITEMS 604.301911 AND 655.1011

	Y
TYPE A	1'-10 1/2"
TYPE B	2'-8 1/2"

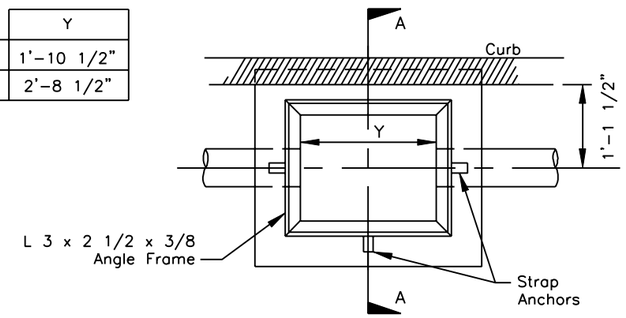

PLAN

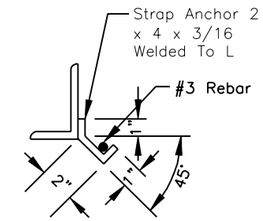

ANCHOR DETAIL

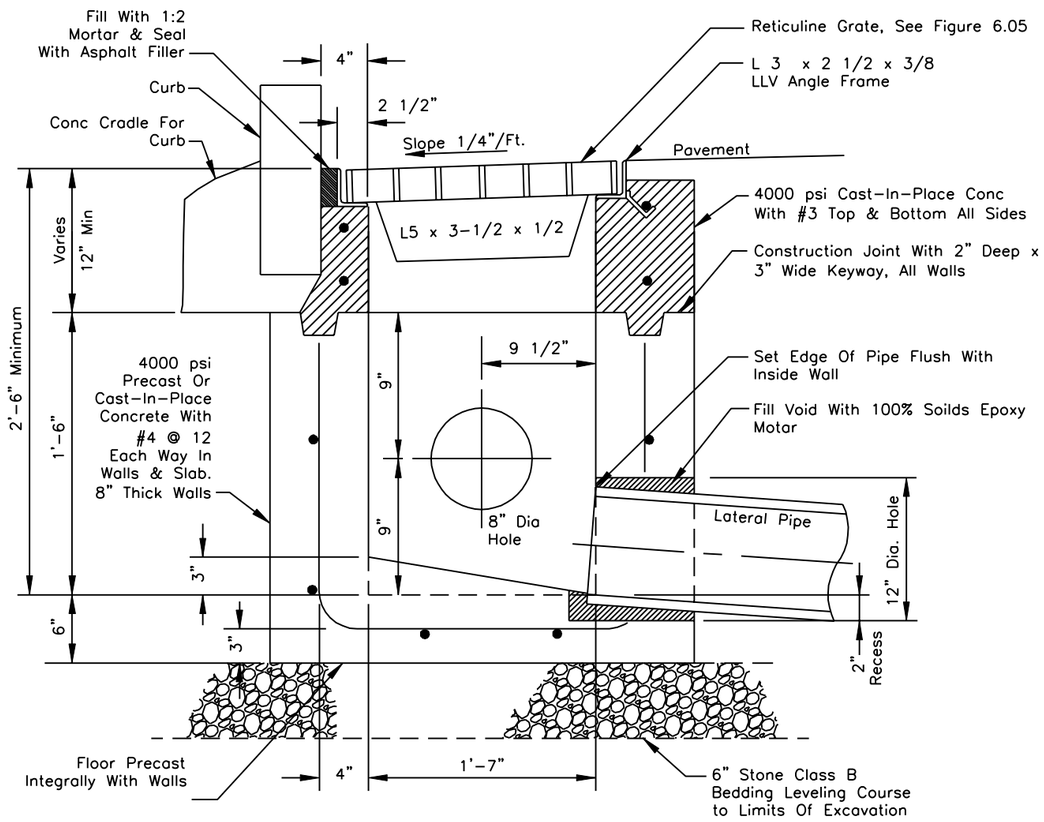

SECTION A-A

NOTES:

with 2 coats of HIGH BUILD EPOXY LINER.

with 2 coats of bituminous coating.

"I hereby certify by my signature and seal below, that I have prepared this record drawing which is, to the best of my knowledge and in my professional opinion, a true representation of the work as constructed on the Westfall Road Improvements Phase III, Project No. 1409."

STATE OF NEW YORK · MATTHEW J. SCHOFIELD · LICENSED PROFESSIONAL ENGINEER · NO. 069963

Former City of Rochester
Std. Dwg. No. R604-3

TYPE A & B CATCH BASIN
SHALLOW DEPTH (RPWD)

RPWD FIG 6.02 (3-07)
REVISED
PAYMENT UNDER
ITEMS 604.301911 AND 655.1011

NO AS-BUILT REVISIONS

NO.	DATE	BY:	REVISION

Barton & Loguidice, P.C.

DRAFTED BY: JMW/JJB
DESIGN BY: JMW

DEPARTMENT OF TRANSPORTATION
50 WEST MAIN STREET, SUITE 6100
ROCHESTER, NEW YORK 14614-1231

UNAUTHORIZED ALTERATION OR ADDITION TO THIS DRAWING IS A VIOLATION OF THE NEW YORK STATE EDUCATION LAW ARTICLE 145, SECTION 7209

PROJECT NAME: WESTFALL ROAD
LIMITS: E. HENRIETTA ROAD TO LAC-DE-VILLE BLVD
TOWN: BRIGHTON
CITY: ROCHESTER
CAPITAL PROJECT NO.: 4753.77
BRIDGE IDENTIFICATION NO.: N.A.

MISCELLANEOUS DETAILS
(PURE WATERS)

SCALE: NOT TO SCALE
DATE ISSUED: 4/25/2014
DRAWING NO. MD-5b
SHEET NO. 40 OF 112

mek
I:\MicroStation\Workspace\PLOT\NYSDOT\NYSDOT_SIZE_B.TBL
I:\MicroStation\Workspace\Plot\NYSDOT\NYSDOT_HPLJ5200_B.plt

FILE NAME = L:\Shared\1000\1066005\AS-BUILTS\1066005_md_05b.dgn
DATE = 4/25/2014
TIME = 10:10:15 AM

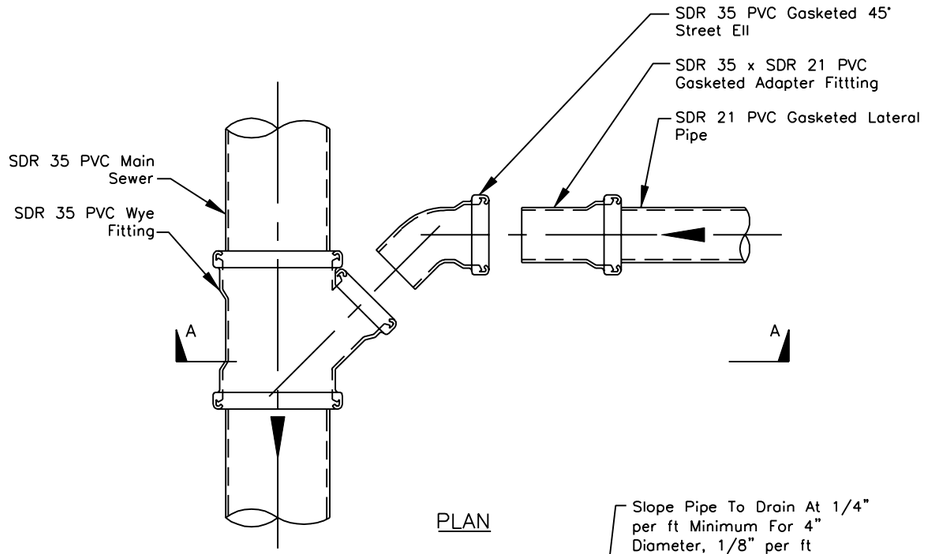

PLAN

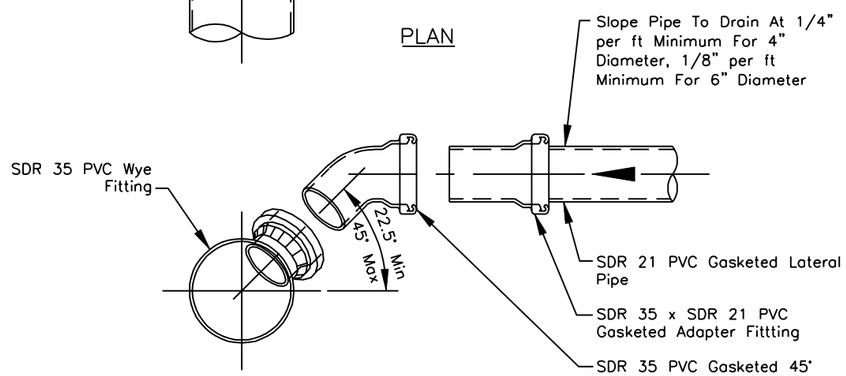

SECTION A–A

NOTES:

1. Main sewer pipe, lateral pipe, wye and other fittings shall be gasketed type fittings. Solvent weld joints are not allowed, except at cleanouts.
2. See PIPE BEDDING AND BACKFILL DETAIL (RPWD Figure 1.01) ON DWG. MD–6b for pipe bedding and backfill.

NEW LATERAL WYE CONNECTION TO NEW SEWER

RPWD FIG 3.03 (2-05)
REVISED

"I hereby certify by my signature and seal below, that I have prepared this record drawing which is, to the best of my knowledge and in my professional opinion, a true representation of the work as constructed on the Westfall Road Improvements Phase III, Project No. 1409."

STATE OF NEW YORK · MATTHEW J. SCANLEY · No. 059983 · LICENSED PROFESSIONAL ENGINEER

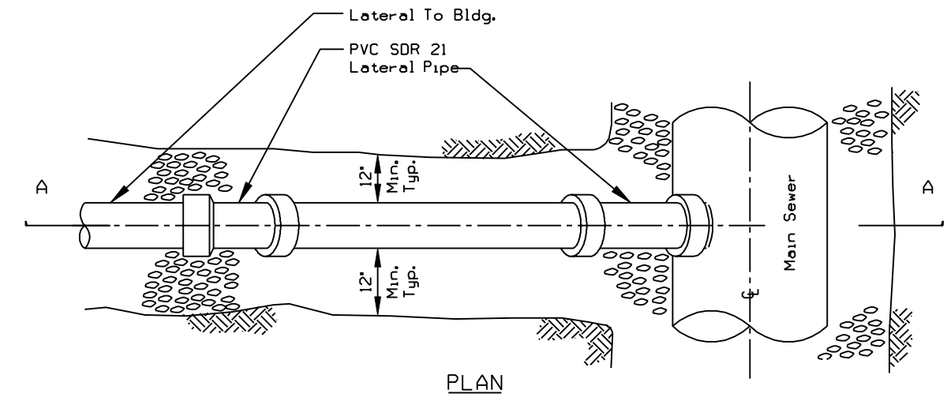

PLAN

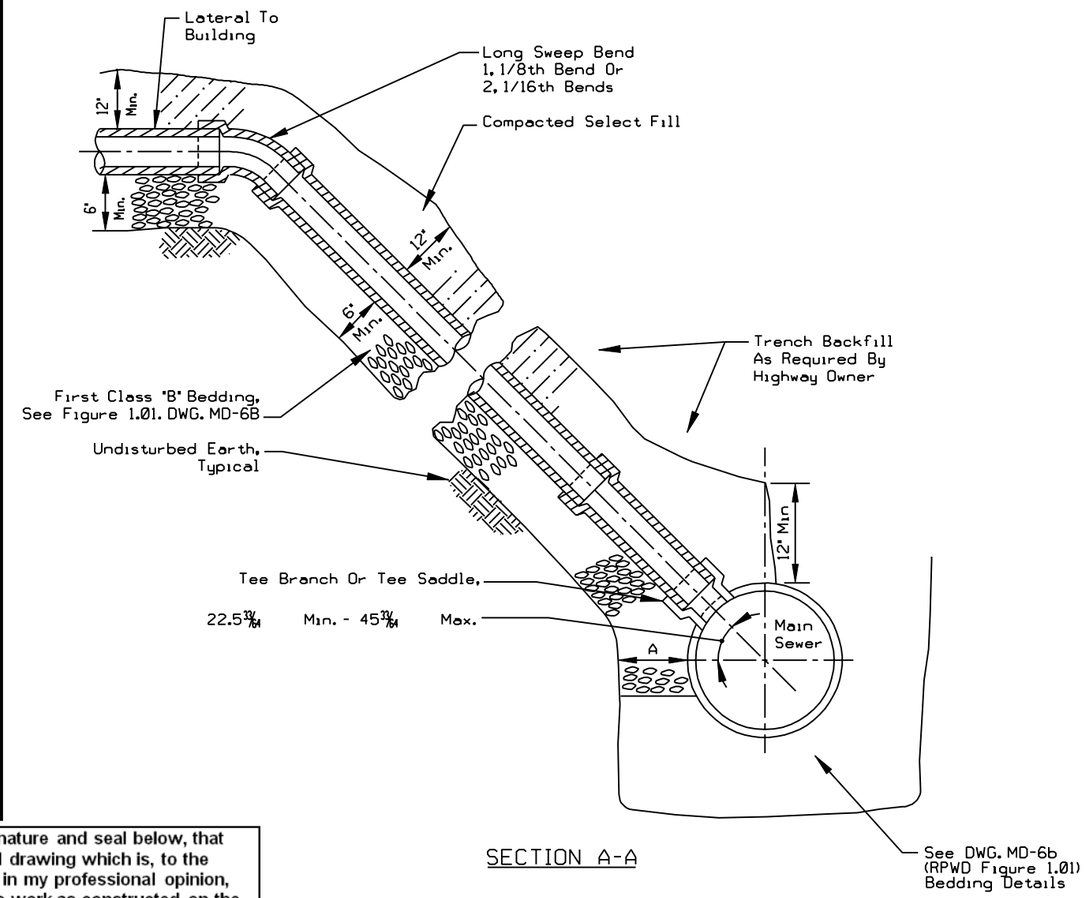

SECTION A-A

LATERAL RISER CONNECTION

RPWD FIG 3.06 (2-07)
REVISED

NO.	DATE	BY:	REVISION
NO AS-BUILT REVISIONS			

Barton & Loguidice, P.C.

DRAFTED BY: JMW/JJB
DESIGN BY: JMW

DEPARTMENT OF TRANSPORTATION
50 WEST MAIN STREET, SUITE 6100
ROCHESTER, NEW YORK 14614-1231

UNAUTHORIZED ALTERATION OR ADDITION TO THIS DRAWING IS A VIOLATION OF THE NEW YORK STATE EDUCATION LAW ARTICLE 145, SECTION 7209

PROJECT NAME: WESTFALL ROAD
LIMITS: E. HENRIETTA ROAD TO LAC-DE-VILLE BLVD
TOWN: BRIGHTON
CITY: ROCHESTER
CAPITAL PROJECT NO.: 4753.77
BRIDGE IDENTIFICATION NO.: N.A.

MISCELLANEOUS DETAILS (PURE WATERS)

SCALE: NOT TO SCALE
DATE ISSUED: 4/25/2014
DRAWING NO. MD-6a
SHEET NO. 41 OF 112

mek
I:\MicroStation\Workspace\PLOT\NYSDOT\NYSDOT_SIZE_B.TBL
I:\MicroStation\Workspace\Plot\NYSDOT\NYSDOT_HPLJ5200_B.plt

FILE NAME = I:\Shared\1000\1066005\AS-BUILTS\1066005_md_06a.dgn
DATE = 4/25/2014
TIME = 10:10:37 AM

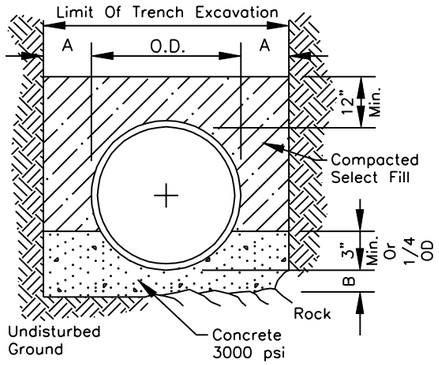

CONCRETE CRADLE
CLASS "A"

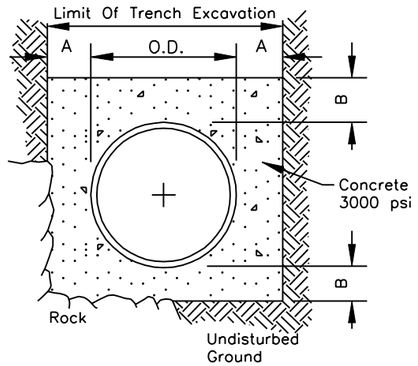

CONCRETE ENCASEMENT

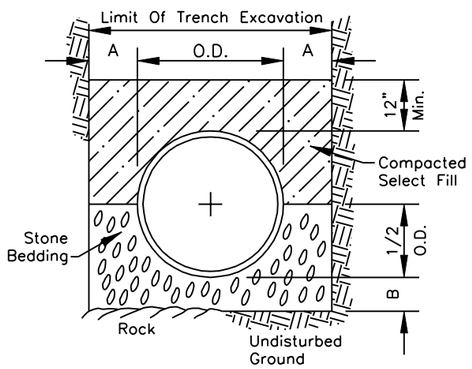

FIRST CLASS
CLASS "B"

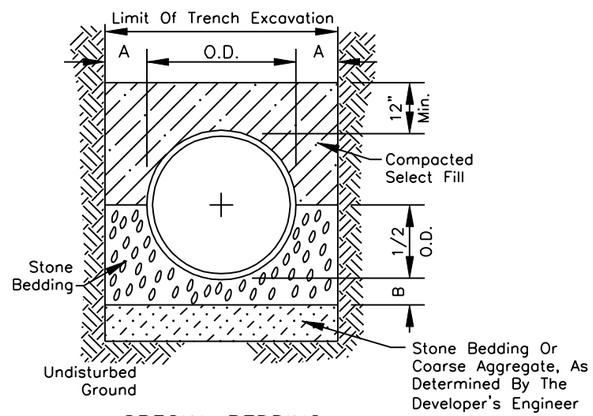

SPECIAL BEDDING
IN UNSTABLE MATERIAL

PIPE DIA.	DIM. A	DIM. B
UP TO 18"	1.0'	6"
21" TO 36"	1.5'	9"
OVER 36"	1.5'	12"

"I hereby certify by my signature and seal below, that I have prepared this record drawing which is, to the best of my knowledge and in my professional opinion, a true representation of the work as constructed on the Westfall Road Improvements Phase III, Project No. 1409."

STATE OF NEW YORK · MATTHEW J. SCHOLTZ · No. 069983 · LICENSED PROFESSIONAL ENGINEER

NOTES:

1. Trench backfill shall be as required by the highway owner.
2. Select fill shall be sand, gravel, and similar material which shall be free from clay, loam, organic material, debris, frozen material and shall contain only small amounts of stone, pebbles, or lumps over one inch in greatest dimension, but none over two inches in greatest dimension.
3. Stone bedding shall mean approved imported aggregate meeting the requirements of the New York State Department of Transportation, Standard Specification, "Crushed Stone", primary size 1 or a mixture of primary size 1 and 2, washed.
4. Coarse aggregate shall mean approved imported aggregate meeting the requirements of the New York State Department of Transportation, Standard Specification, "Crushed Stone", primary size 3 or a mixture of primary size 3 and 4.
5. This Figure applies to Pure Waters sanitary, storm, and combined mainline sewers and lateral pipe installations, as well as forcemains.

BEDDING DETAILS
RPWD FIG 1.01 (2-05)
REVISED

SPECIAL NOTE:

Storm sewers shall not be connected to sanitary sewers, and sanitary sewers shall not be connected to storm sewers.

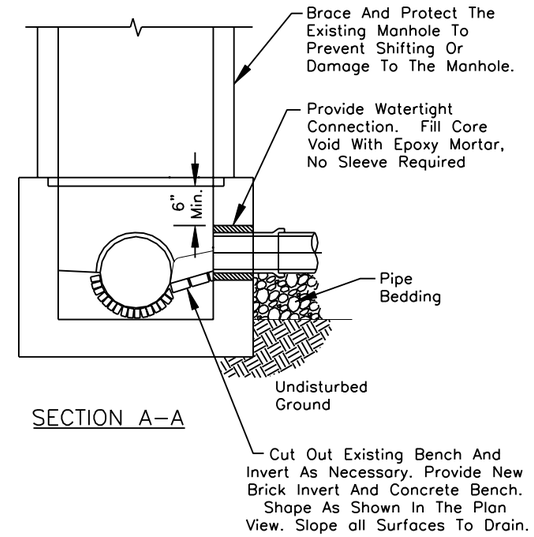

SECTION A–A

NOTES:

1. Notify Pure Waters a minimum of 48 hours in advance of construction for inspection of connection. Telephone (585) 760–7600, Option 5.
2. New openings for pipe may be cored or drilled. Impact devices are not allowed for creating openings in existing manholes or chambers. Cored openings in manhole riser sections shall be not less than 6–inches from a riser joint.
3. Stub at manhole shall not exceed 100 degrees alignment entering against the existing upstream sewer.
4. Provide a pipe joint within 4–feet maximum of the outside face of manhole for reinforced concrete or ductile iron pipe.
5. Construct the crown of new sewer not lower than the crown of the existing main sewer. Construct the invert of the new sewer 3–inches minimum above the existing main sewer invert.
6. Construct top of new bench to springline of new sewer pipe.
7. Coat all disturbed surfaces of the manhole with 2 coats OF HIGH BUILD EPOXY for interior of base and 2 coats of bitumastic for all exterior surfaces.

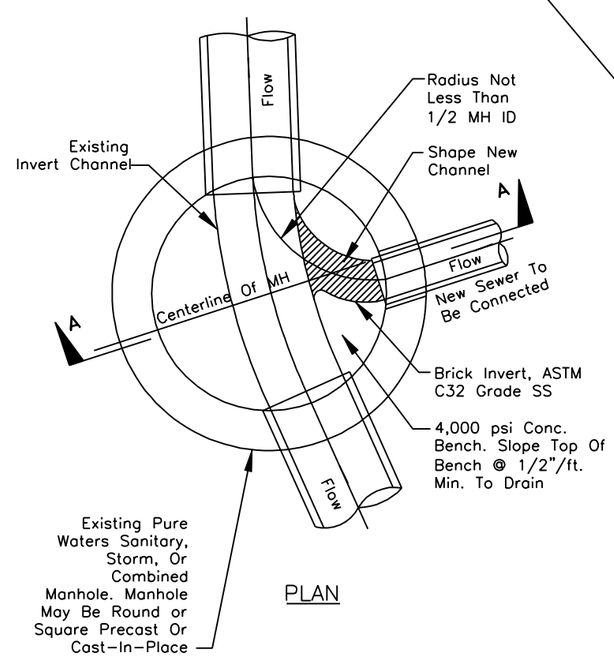

PLAN

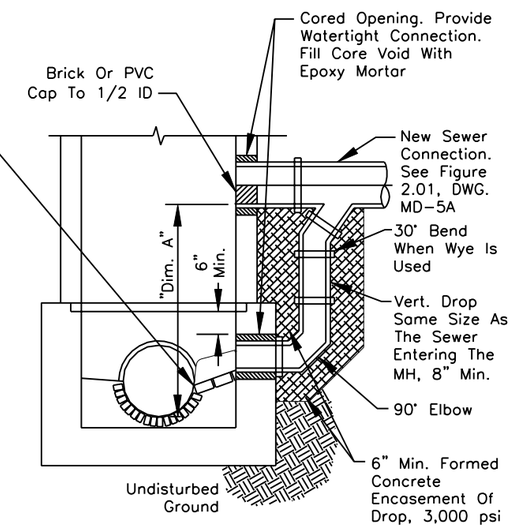

SECTION A–A
(FOR OUTSIDE DROP CONNECTION)
Where Dim. "A" Is Equal To Or Greater Than 2' For Sanitary Sewers, Or Equal To Or Greater Than 5' For Storm Sewers

SEWER CONNECTIONS TO EXISTING MANHOLE
RPWD FIG 2.03 (3-07)
REVISED

NO AS-BUILT REVISIONS

NO.	DATE	BY:	REVISION

Barton & Loguidice, P.C.

DRAFTED BY: JMW/JJB
DESIGN BY: JMW

DEPARTMENT OF TRANSPORTATION
50 WEST MAIN STREET, SUITE 6100
ROCHESTER, NEW YORK 14614-1231

UNAUTHORIZED ALTERATION OR ADDITION TO THIS DRAWING IS A VIOLATION OF THE NEW YORK STATE EDUCATION LAW ARTICLE 145, SECTION 7209

PROJECT NAME: WESTFALL ROAD
LIMITS: E. HENRIETTA ROAD TO LAC-DE-VILLE BLVD
TOWN: BRIGHTON
CITY: ROCHESTER
CAPITAL PROJECT NO.: 4753.77
BRIDGE IDENTIFICATION NO.: N.A.

MISCELLANEOUS DETAILS (PURE WATERS)

SCALE: NOT TO SCALE
DATE ISSUED: 4/25/2014
DRAWING NO. MD-6b
SHEET NO. 42 OF 112

mek
I:\MicroStation\Workspace\PLOT\NYSDOT\NYSDOT_SIZE_B.TBL
I:\MicroStation\Workspace\Plot\NYSDOT\NYSDOT_HPLJ5200_B.plt
FILE NAME = I:\Shared\1000\1066005\AS-BUILTS\1066005_md_06b.dgn
DATE = 4/25/2014
TIME = 10:11:19 AM

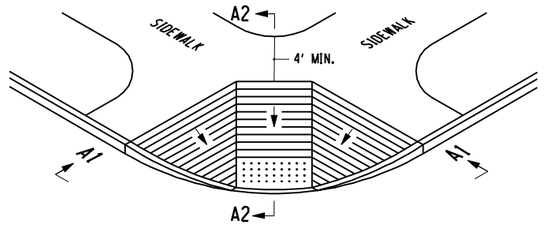

ISOMETRIC

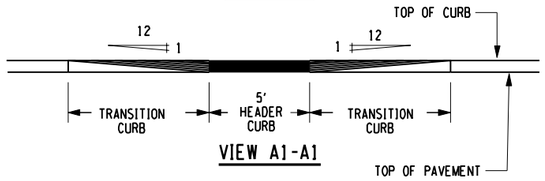

VIEW A1-A1

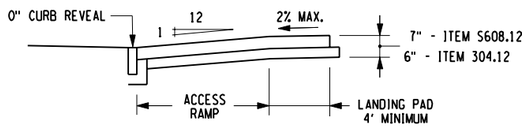

SECTION A2-A2

TYPE A (CITY)

"I hereby certify by my signature and seal below, that I have prepared this record drawing which is, to the best of my knowledge and in my professional opinion, a true representation of the work as constructed on the Westfall Road Improvements Phase III, Project No. 1409."

STATE OF NEW YORK · MATTHEW J. SCHOFIELD · No. 069983 · LICENSED PROFESSIONAL ENGINEER

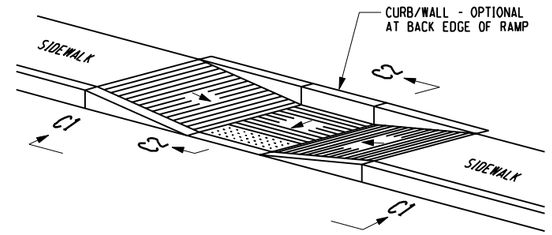

ISOMETRIC

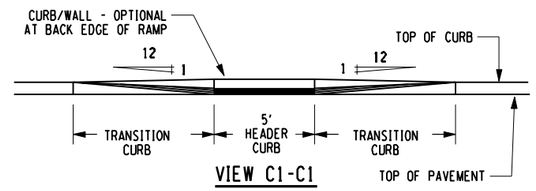

VIEW C1-C1

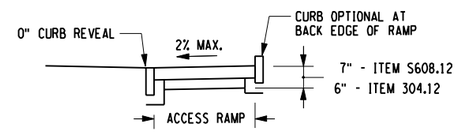

SECTION C2-C2

SIDEWALK RAMP DETAIL - TYPE C (CITY)

NOT TO SCALE

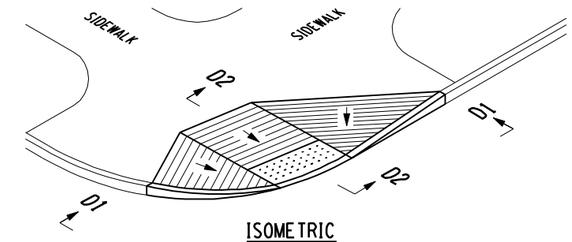

ISOMETRIC

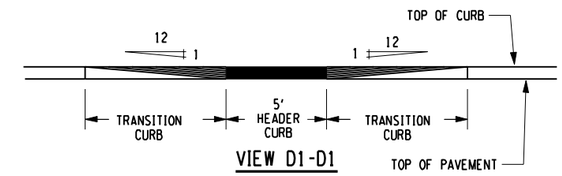

VIEW D1-D1

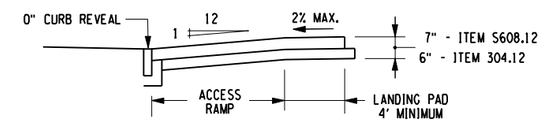

SECTION D2-D2

SIDEWALK RAMP DETAIL - TYPE D (CITY)

NOT TO SCALE

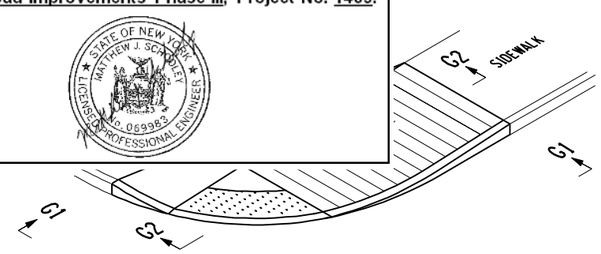

ISOMETRIC

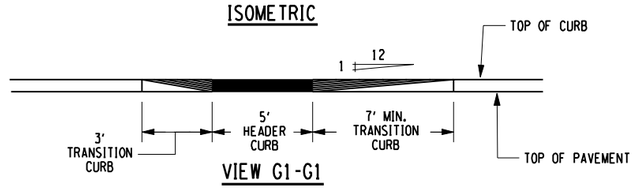

VIEW G1-G1

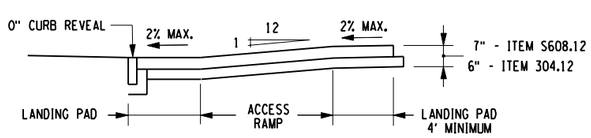

SECTION G2-G2

SIDEWALK RAMP DETAIL - TYPE G MODIFIED (CITY)

NOT TO SCALE

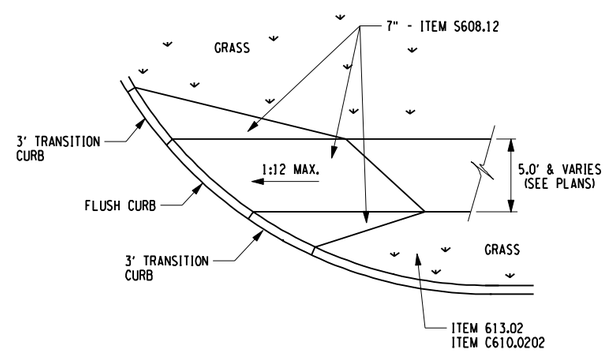

SIDEWALK RAMP DETAIL - TYPE C3 (COUNTY)

NOT TO SCALE

ADA SIDEWALK RAMP NOTES

1. 1:12 IS MAXIMUM SLOPE OF ACCESS RAMPS.
2. SURFACE OF ACCESS RAMP IS TO BE STABLE, FIRM AND SLIP-RESISTANT. TEXTURE SURFACE WITH COARSE BROOM RUNNING TRANSVERSE TO SLOPE OF ACCESS RAMP.
3. ENTIRE AREA OF ACCESS RAMP AND LANDING PAD IS TO BE 7 INCH THICK CONCRETE.
4. REFER TO NYSDOT STANDARD SHEET 608-01 FOR DETECTABLE WARNING DETAILS AND PLACEMENT.

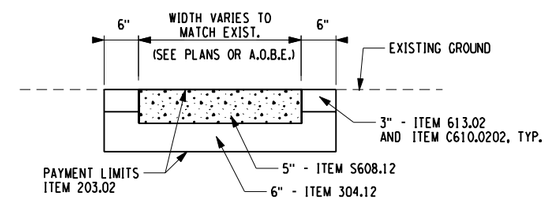

SECTION A-A

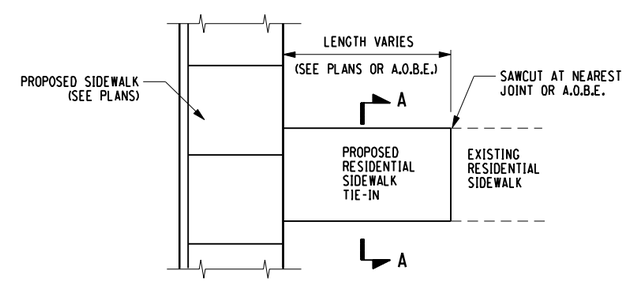

SIDEWALK TIE-IN WITH RESIDENTIAL WALK DETAIL

NOT TO SCALE

NO.	DATE	BY:	REVISION

NO AS-BUILT REVISIONS

Barton & Loguidice, P.C.

DRAFTED BY: JMW/JJB

DESIGN BY: JMW

DEPARTMENT OF TRANSPORTATION
50 WEST MAIN STREET, SUITE 6100
ROCHESTER, NEW YORK 14614-1231

UNAUTHORIZED ALTERATION OR ADDITION TO THIS DRAWING IS A VIOLATION OF THE NEW YORK STATE EDUCATION LAW ARTICLE 145, SECTION 7209

PROJECT NAME: WESTFALL ROAD
LIMITS: E. HENRIETTA ROAD TO LAC-DE-VILLE BLVD
TOWN: BRIGHTON
CITY: ROCHESTER
CAPITAL PROJECT NO.: 4753.77
BRIDGE IDENTIFICATION NO.: N.A.

MISCELLANEOUS DETAILS

SCALE:
DATE ISSUED: 4/25/2014
DRAWING NO. MD-7
SHEET NO. 43 OF 112

FILE NAME = I:\Shared\1000\1066005\AS-BUILTS\1066005_md_07.dgn
DATE = 4/25/2014
TIME = 10:11:41 AM

mek
I:\MicroStation\Workspace\PLOT\NYSDOT\NYSDOT_SIZE_B.TBL
I:\MicroStation\Workspace\Plot\NYSDOT\NYSDOT_HPLJ5200_B.plt

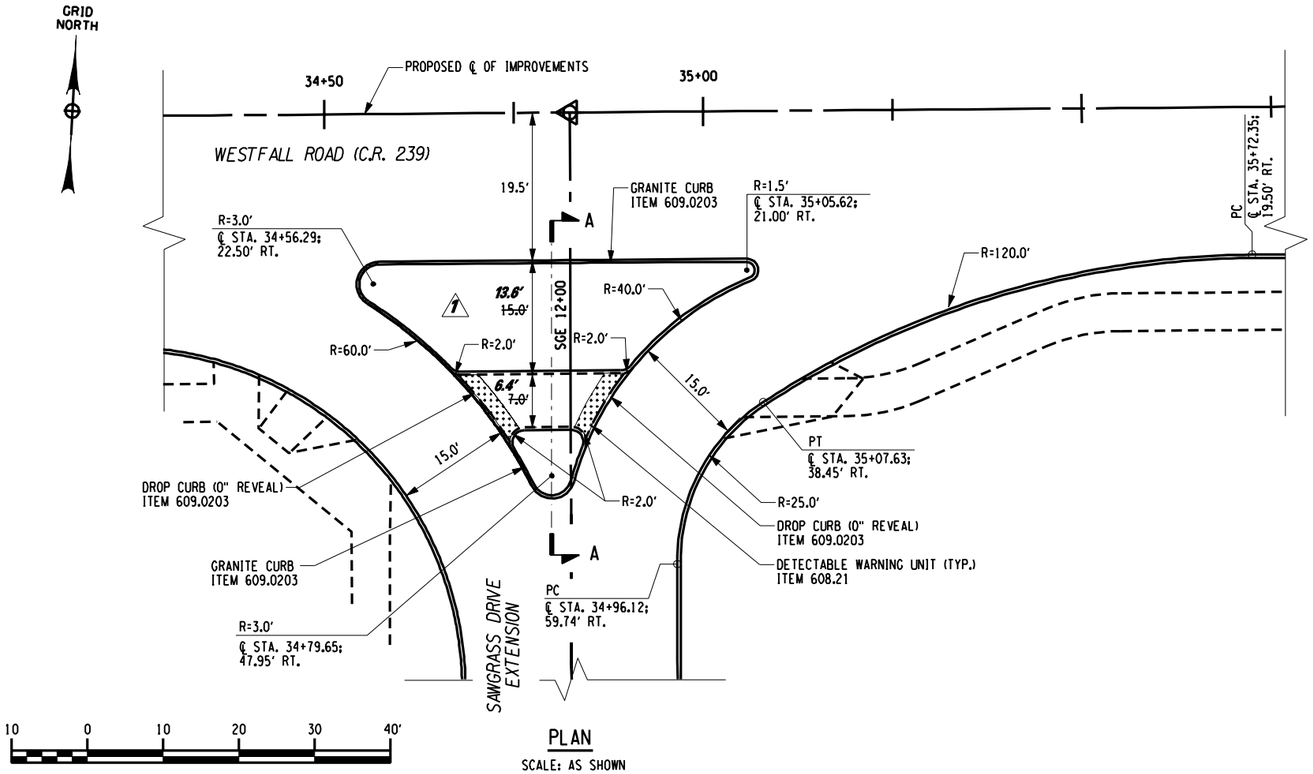

PLAN

SCALE: AS SHOWN

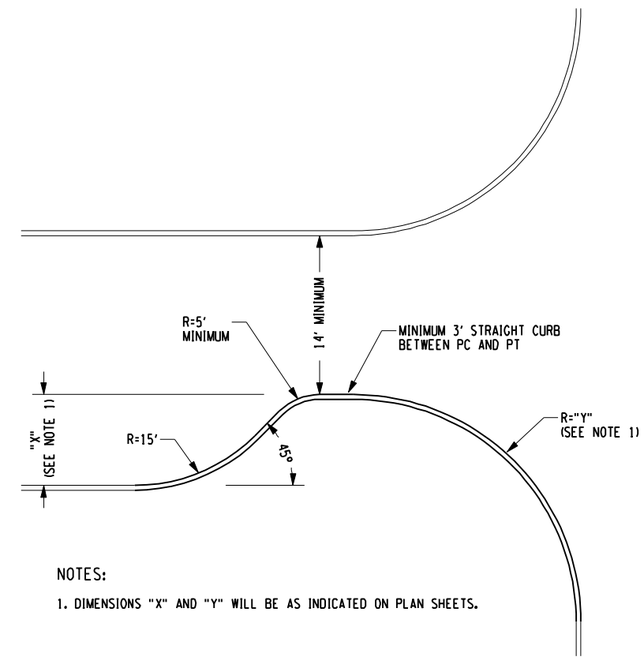

NOTES:

1. DIMENSIONS "X" AND "Y" WILL BE AS INDICATED ON PLAN SHEETS.

CURB BUMP-OUT DETAIL (CITY)

REFER TO PLANS FOR LOCATIONS

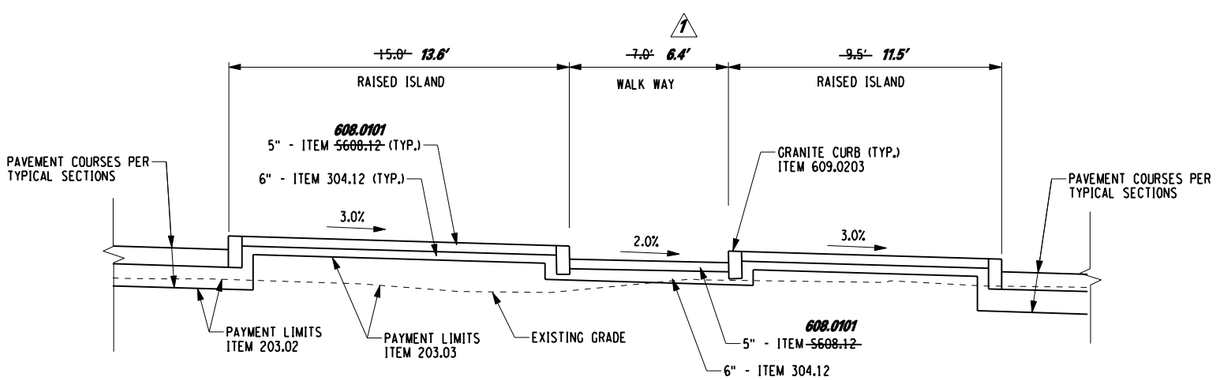

NOTES:

1. REFER TO SIGNING PLAN FOR SLEEVE LOCATIONS

SECTION A-A

NOT TO SCALE

SAWGRASS DRIVE EXTENSION ISLAND DETAIL

REFER TO DWG. PL-6 FOR LOCATION

"I hereby certify by my signature and seal below, that I have prepared this record drawing which is, to the best of my knowledge and in my professional opinion, a true representation of the work as constructed on the Westfall Road Improvements Phase III, Project No. 1409."

STATE OF NEW YORK · MATTHEW J. SCHOLEY · No. 069983 · LICENSED PROFESSIONAL ENGINEER

NO.	DATE	BY:	REVISION
1	10/17	JMW	REVISED PLAN & SECTION DIM.

Barton & Loguidice, P.C.

DRAFTED BY: JMW/JJB

DESIGN BY: JMW

DEPARTMENT OF TRANSPORTATION
50 WEST MAIN STREET, SUITE 6100
ROCHESTER, NEW YORK 14614-1231

UNAUTHORIZED ALTERATION OR ADDITION TO THIS DRAWING IS A VIOLATION OF THE NEW YORK STATE EDUCATION LAW ARTICLE 145, SECTION 7209

PROJECT NAME: WESTFALL ROAD

LIMITS: E. HENRIETTA ROAD TO LAC-DE-VILLE BLVD

TOWN: BRIGHTON

CITY: ROCHESTER

CAPITAL PROJECT NO.: 4753.77

BRIDGE IDENTIFICATION NO.: N.A.

MISCELLANEOUS DETAILS

SCALE:

DATE ISSUED: 4/25/2014

DRAWING NO. MD-8

SHEET NO. 44 OF 112

mek
I:\MicroStation\Workspace\PLOT\NYSDOT\NYSDOT_SIZE_B.TBL
I:\MicroStation\Workspace\Plot\NYSDOT\NYSDOT_HPLJ5200_B.plt

FILE NAME = I:\Shared\1000\1066005\AS-BUILTS\1066005_md_08.dgn
DATE = 4/25/2014
TIME = 10:12:01 AM

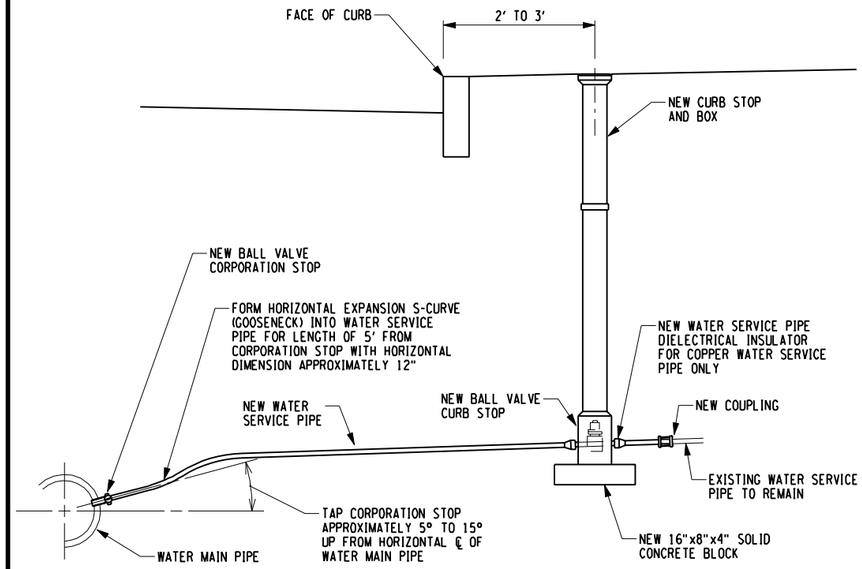

NOTES:

1. WATER SERVICE PIPE IS TO HAVE MINIMUM COVER DEPTH OF 4.50 FEET FROM FINISHED SURFACE.
2. WATER SERVICE TAP IS TO BE MADE ON CUSTOMER SIDE OF WATER MAIN PIPE. FOR PLASTIC WATER MAIN PIPE USE WIDE STRAP BRASS TAPPING SADDLE. FOR CAST/DUCTILE IRON WATER MAIN PIPE USE DOUBLE STRAP BRASS TAPPING SADDLE, SEE TABLE.
3. WATER SERVICE PIPE IS TO RUN PERPENDICULAR TO WATER MAIN PIPE.
4. FOR WATER SERVICE PIPE 1½INCHES AND LARGER, ADD CURB BOX ARCH TO CURB BOX.
5. TRACER WIRE MUST BE INSTALLED FOR PLASTIC WATER SERVICE PIPE, SEE DETAIL THIS SHEET.
6. MAGNESIUM ANODE MUST BE INSTALLED FOR COPPER WATER SERVICE PIPE.
7. WARNING TAPE MUST BE INSTALLED WITH ALL OPEN CUT TRENCHED WATER SERVICE PIPE INSTALLATIONS.
8. REFER TO WATER BUREAU'S APPROAVED PRODUCT LIST FOR LIST OF APPROVED WATER SERVICE PRODUCTS.

SERVICE SADDLE REQUIREMENTS FOR TAPS ON CAST/DUCTILE IRON WATER MAIN PIPE	
WATER MAIN PIPE SIZE (INCHES)	MAXIMUM TAP SIZE ALLOWED W/O SERVICE SADDLE (INCHES)
4" - 6"	ALL TAPS REQUIRE SADDLE
8" - 10"	¾"
12"	1"
16" AND LARGER	1½"

SERVICE INSTALLATION - 2 INCH AND SMALLER (CITY)

NOT TO SCALE
SEE DWG. MT-3 FOR LOCATIONS

"I hereby certify by my signature and seal below, that I have prepared this record drawing which is, to the best of my knowledge and in my professional opinion, a true representation of the work as constructed on the Westfall Road Improvements Phase III, Project No. 1409."

STATE OF NEW YORK · MATTHEW J. SCHOLTZ · No. 069983 · LICENSED PROFESSIONAL ENGINEER

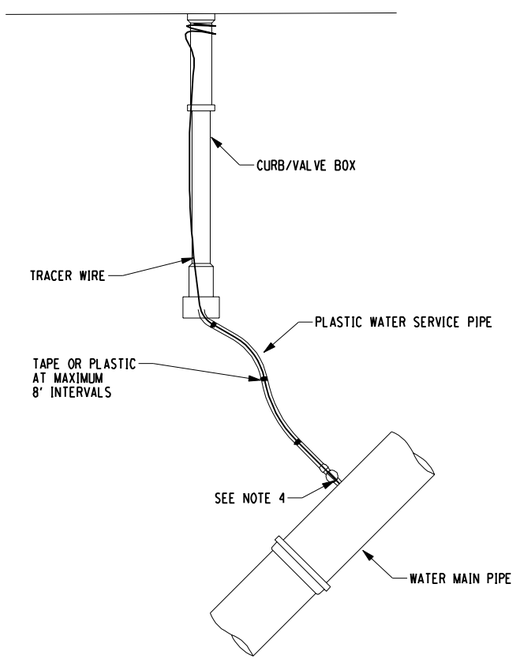

NOTES:

1. FOR OPEN CUT INSTALLATION, TRACER WIRE IS TO BE #12 AWG SOLID COPPER WITH 30 MIL BLUE HMWPE INSULATION. FOR TRENCHLESS INSTALLATION, TRACER WIRE IS TO BE #12 AWG SOLID COPPER CLAD STEEL CORE WITH 45 MIL BLUE HDPE INSULATION.
2. FOR NEW PLASTIC WATER SERVICE PIPE CONNECTED TO PLASTIC WATER MAIN PIPE, WATER SERVICE TRACER WIRE IS TO BE SPLICED TO WATER MAIN TRACER WIRE AND EXTENDED UP TO TOP OF CURB/VALVE BOX. WATER SERVICE TRACER WIRE IS TO RUN ALONG TOP OF AND BE SECURED TO PLASTIC WATER SERVICE PIPE WITH PLASTIC STRAPS OR TAPE PLACED AT MAXIMUM 8 FEET INTERVALS.
3. FOR CURB/VALVE BOX IN LAWN AREA, EXTEND WATER SERVICE TRACER WIRE UP OUTSIDE OF CURB/VALVE BOX WINDING END 3 TIMES AROUND AND APPROXIMATELY 1 INCH BELOW TOP OF CURB/VALVE BOX. FOR CURB/VALVE BOX IN PAVED AREA, EXTEND WATER SERVICE TRACER WIRE UP INSIDE OF CURB/VALVE BOX LEAVING MINIMUM OF 3 FEET OF WATER SERVICE TRACER WIRE COILED UP INSIDE TOP OF CURB/VALVE BOX.
4. FOR NEW PLASTIC WATER SERVICE PIPE CONNECTED TO CAST/DUCTILE IRON WATER MAIN PIPE, WATER SERVICE TRACER WIRE IS TO BE CONNECTED TO CORPORATION STOP WITH BRASS THAW WIRE NUT COMPRESSION ASSEMBLY WITH SET SCREW.

PLASTIC WATER SERVICE TRACER WIRE INSTALLATION (CITY)

NOT TO SCALE
SEE DWG. MT-3 FOR LOCATIONS

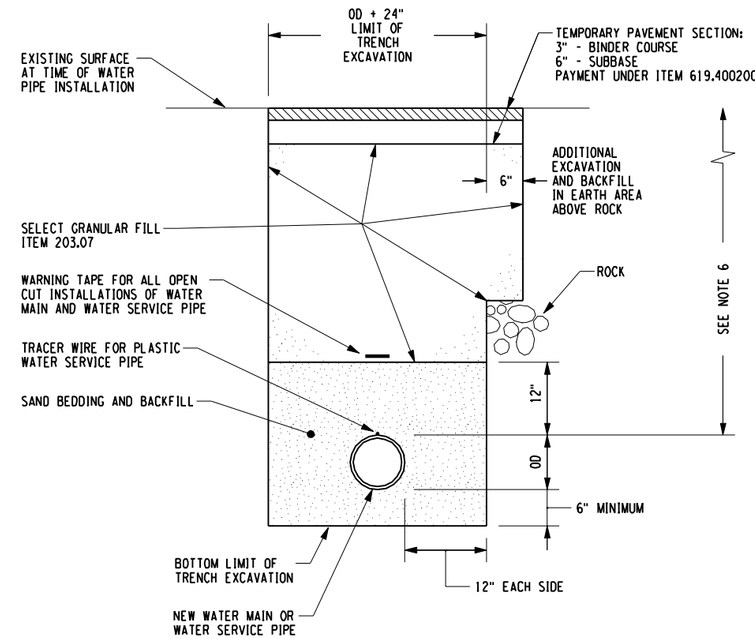

NOTES:

1. LIMITS SHOWN ARE MAXIMUM ALLOWED AND MINIMUM REQUIRED FOR EXCAVATION AND BACKFILL.
2. UPPER LIMIT FOR TRENCH EXCAVATION IS TOP OF EXISTING SURFACE AT TIME OF TRENCH EXCAVATION.
3. UPPER LIMIT FOR ROCK EXCAVATION IS TOP SURFACE OF ROCK.
4. UPPER LIMIT FOR SELECT GRANULAR BACKFILL (WATER) IS BOTTOM OF TEMPORARY PAVEMENT, IF USED, OTHERWISE TOP OF SURFACE.
5. TEMPORARY OR PERMANENT BLOCKS OR ANY OTHER TYPE OF PIPE SUPPORT IS NOT TO BE USED DURING PIPE INSTALLATION.
6. MINIMUM DEPTH OF COVER FOR WATER PIPE FROM TOP OF PROPOSED GRADE IS 4.50 FEET FOR DOMESTIC WATER PIPE, AND 5 FEET FOR HOLLY WATER PIPE, UNLESS OTHERWISE NOTED ON PLANS OR AS DIRECTED BY PROJECT MANAGER.
7. TEMPORARY PAVEMENT IS TO BE PLACED WITHIN 24 HOURS AFTER BACKFILLING TRENCH OR EXCAVATION.

WATER TRENCH DETAIL - PAVEMENT RECONSTRUCTION (CITY)

NOT TO SCALE
SEE DWG. MT-3 FOR LOCATIONS

NO AS-BUILT REVISIONS

NO.	DATE	BY:	REVISION

Barton & Loguidice, P.C.

DRAFTED BY: JMW/JJB
DESIGN BY: JMW

DEPARTMENT OF TRANSPORTATION
50 WEST MAIN STREET, SUITE 6100
ROCHESTER, NEW YORK 14614-1231

UNAUTHORIZED ALTERATION OR ADDITION TO THIS DRAWING IS A VIOLATION OF THE NEW YORK STATE EDUCATION LAW ARTICLE 145, SECTION 7209

PROJECT NAME: WESTFALL ROAD
LIMITS: E. HENRIETTA ROAD TO LAC-DE-VILLE BLVD
TOWN: BRIGHTON
CITY: ROCHESTER
CAPITAL PROJECT NO.: 4753.77
BRIDGE IDENTIFICATION NO.: N.A.

CITY WATER DETAILS

SCALE: NOT TO SCALE
DATE ISSUED: 4/25/2014
DRAWING NO. MD-9
SHEET NO. 45 OF 112

mek
I:\MicroStation\Workspace\PLOT\NYSDOT\NYSDOT_SIZE_B.TBL
I:\MicroStation\Workspace\Plot\NYSDOT\NYSDOT_HPLJ5200_B.plt

FILE NAME = I:\Shared\1000\1066005\AS-BUILTS\1066005_md_09.dgn
DATE = 4/25/2014
TIME = 10:12:22 AM

NOTES:

1. HYDRANT MARKER POST IS TO BE LOCATED SUCH AS TO MINIMIZE INTERFERENCE WITH PEDESTRIAN TRAFFIC AND TO LEAVE MINIMUM 6 FEET CLEAR ZONE FOR SIDEWALK SNOW PLOW OPERATIONS.
2. PREFERRED LOCATION OF HYDRANT MARKER POST IS DIRECTLY BEHIND HYDRANT. IF HYDRANT MARKER POST CANNOT BE SET AT THAT LOCATION IT MAY BE SET AT ONE OF THE OTHER LOCATIONS AS SHOWN. REGARDLESS OF LOCATION HYDRANT MARKER POST IS NOT TO BLOCK ACCESS TO ANY HYDRANT NOZZLE.
3. HYDRANT MARKER POST IS TO BE SET VERTICALLY PLUMB AND WITH EDGE FLANGES FACING AWAY FROM HYDRANT.
4. IN AREAS OF FULL WIDTH SIDEWALK HYDRANT MARKER POST LOCATION WILL BE AS APPROVED BY CITY.
5. HYDRANT MARKER POST IS NOT TO BE INSTALLED WITHIN GENERAL LIMITS OF CENTRAL BUSINESS DISTRICT.

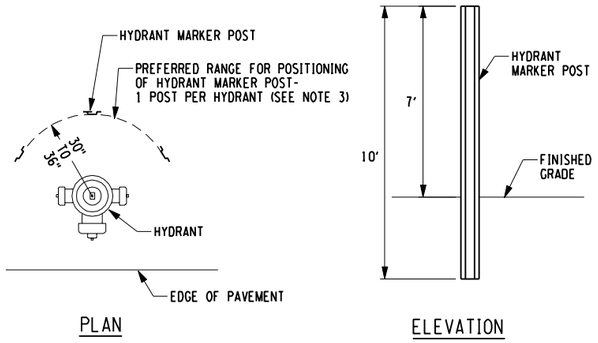

HYDRANT MARKER POST DETAIL (CITY)

NOT TO SCALE
SEE DWG. MT-3 FOR LOCATIONS

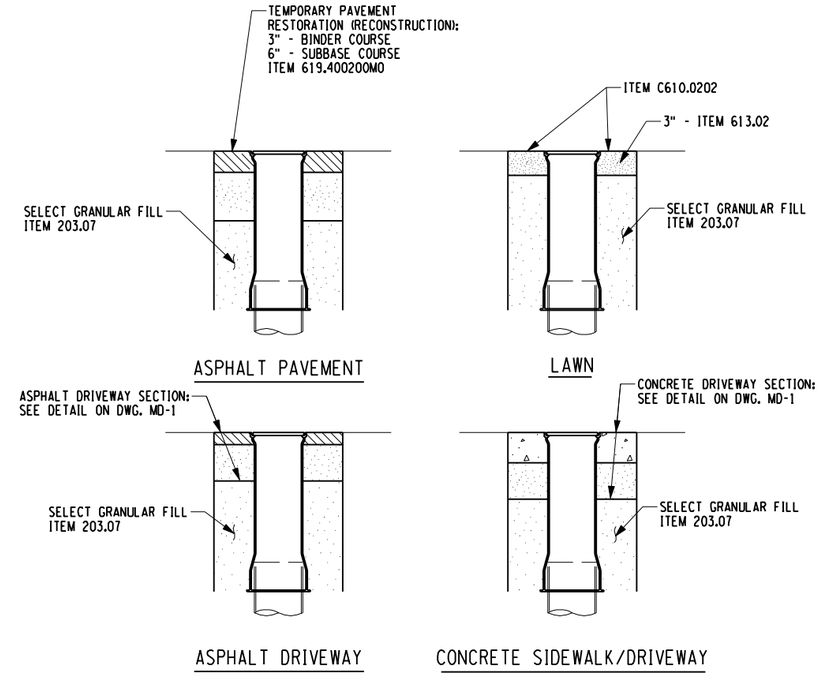

SECTIONS

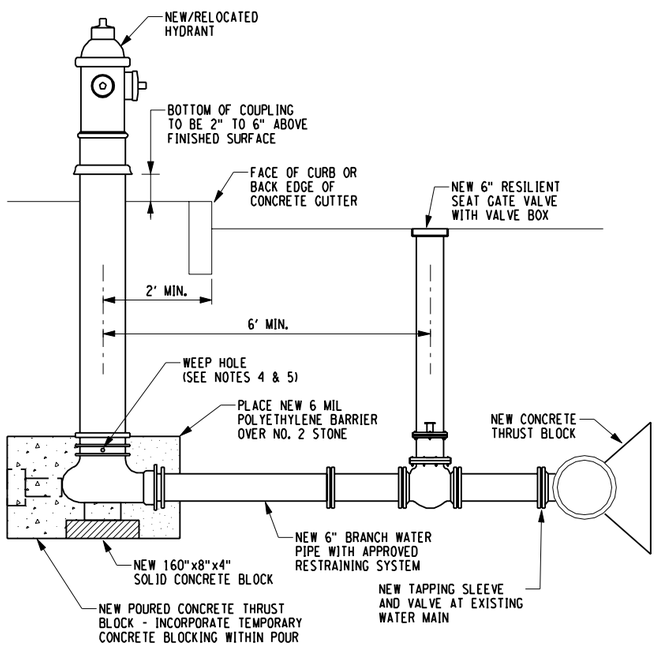

NOTES:

1. PUMPER CONNECTION IS TO FACE PAVEMENT.
2. MECHANICAL JOINT OFFSET OR HYDRANT EXTENSION KIT CAN BE USED TO SET HYDRANT AT PROPER ELEVATION.
3. HORIZONTAL BEND CAN BE USED TO ACHIEVE MINIMUM PIPE LENGTH OF 6 FEET BETWEEN GATE VALVE AND HYDRANT.
4. WHEN GROUND WATER IS ENCOUNTERED IN TRENCH, IF APPROVED OF BY CITY, HYDRANT WEEP HOLES MAY BE PLUGGED AND STONE DRAIN OMITTED.
5. CONTRACTOR IS TO NOTIFY WATER BUREAU IN WRITING WHEN HYDRANT WEEP HOLES HAVE BEEN PLUGGED.

HYDRANT AND VALVE WITH NEW BRANCH (CITY)

NOT TO SCALE
SEE DWG. MT-3 FOR LOCATIONS

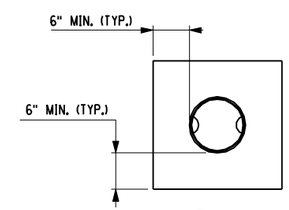

NOTES:

1. THE COST FOR ADJUSTING WATER VALVE BOXES SHALL BE INCLUDED UNDER ITEM 663.33 AND SHALL INCLUDE THE COST FOR EXCAVATION, BACKFILL, AND SURFACE RESTORATION, UNLESS OTHERWISE NOTED.
2. THE COST FOR ADJUSTING EXISTING CURB BOX ASSEMBLIES SHALL BE INCLUDED UNDER ITEM 663.47 AND SHALL INCLUDE THE COST FOR EXCAVATION, BACKFILL, AND SURFACE RESTORATION, UNLESS OTHERWISE NOTED.
2. ADJUST EXISTING WATER VALVE BOX AND COVER, OR INSTALL NEW WATER VALVE BOX AND COVER. SET TOP TO GRADE.
3. IF ADJUSTING EXISTING WATER VALVE BOX AND COVER, EXISTING FLANGE IS TO REMAIN, DO NOT REMOVE.

WATER VALVE BOX ADJUSTMENT OR REPLACEMENT (CITY)

NOT TO SCALE
SEE DWG. MT-3 FOR LOCATIONS

"I hereby certify by my signature and seal below, that I have prepared this record drawing which is, to the best of my knowledge and in my professional opinion, a true representation of the work as constructed on the Westfall Road Improvements Phase III, Project No. 1409."

STATE OF NEW YORK · MATTHEW J. SCHMITT · No. 069983 · LICENSED PROFESSIONAL ENGINEER

NO AS-BUILT REVISIONS

NO.	DATE	BY:	REVISION

Barton & Loguidice, P.C.

DRAFTED BY: JMW/JJB
DESIGN BY: JMW

DEPARTMENT OF TRANSPORTATION
50 WEST MAIN STREET, SUITE 6100
ROCHESTER, NEW YORK 14614-1231

UNAUTHORIZED ALTERATION OR ADDITION TO THIS DRAWING IS A VIOLATION OF THE NEW YORK STATE EDUCATION LAW ARTICLE 145, SECTION 7209

PROJECT NAME: WESTFALL ROAD
LIMITS: E. HENRIETTA ROAD TO LAC-DE-VILLE BLVD
TOWN: BRIGHTON
CITY: ROCHESTER
CAPITAL PROJECT NO.: 4753.77
BRIDGE IDENTIFICATION NO.: N.A.

MISCELLANEOUS DETAILS (CITY WATER)

SCALE: NOT TO SCALE
DATE ISSUED: 4/25/2014
DRAWING NO. MD-10
SHEET NO. 46 OF 112

mek
I:\MicroStation\Workspace\PLOT\NYSDOT\NYSDOT_SIZE_B.TBL
I:\MicroStation\Workspace\Plot\NYSDOT\NYSDOT_HPLJ5200_B.plt
FILE NAME = I:\Shared\1000\1066005\AS-BUILTS\1066005_md_10.dgn
DATE = 4/25/2014
TIME = 10:12:44 AM

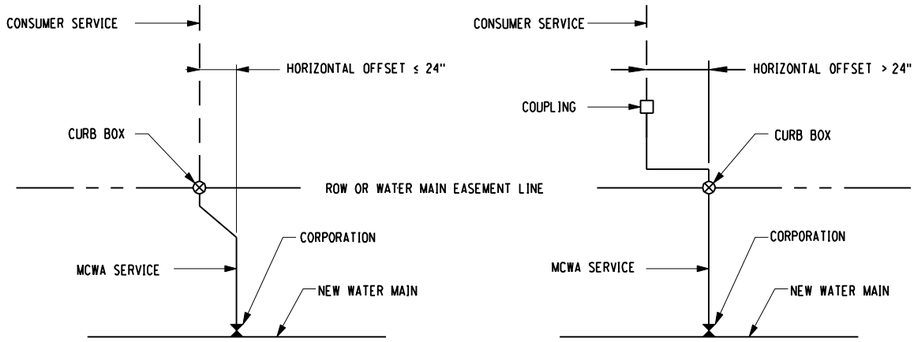

NOTES:

1. OFFSETS MUST BE APPROVED BY THE ENGINEER ON A CASE BY CASE BASIS, AND WILL ONLY BE USED IN THE EVENT OF CONFLICTS.

RVICE PLAN VIEW

NOT TO SCALE

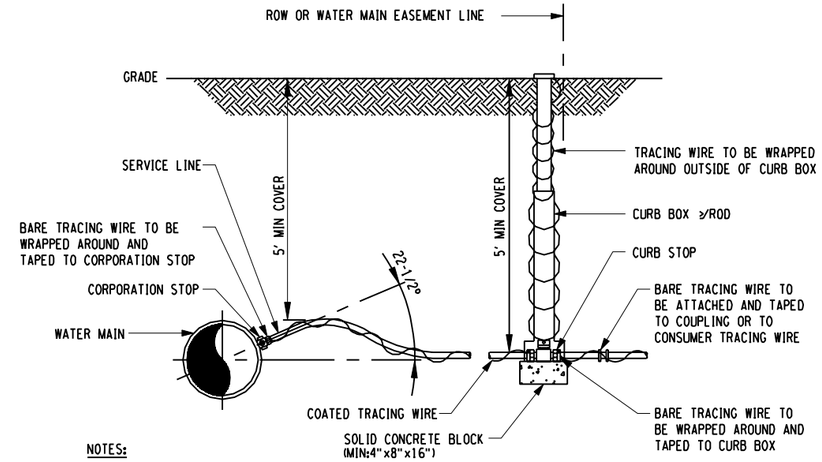

NOTES:

1. COPPER SERVICE TO BE USED UNLESS OTHERWISE APPROVED BY THE ENGINEER.
2. TRACING WIRE TO BE USED WITH POLYETHYLENE SERVICE ONLY.

SERVICE INSTALLATION

NOT TO SCALE

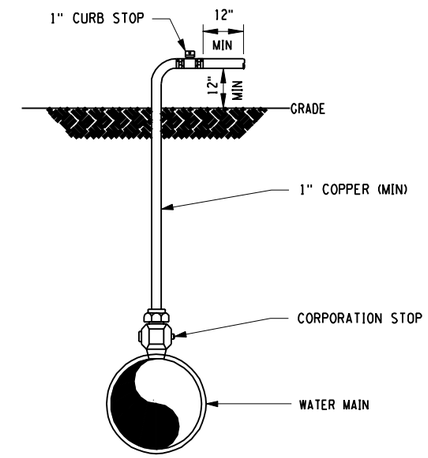

DISINFECTION/BLOW-OFF/SAMPLING TAP

NOT TO SCALE

"I hereby certify by my signature and seal below, that I have prepared this record drawing which is, to the best of my knowledge and in my professional opinion, a true representation of the work as constructed on the Westfall Road Improvements Phase III, Project No. 1409."

STATE OF NEW YORK · MATTHEW J. SCANDLEN · No. 069983 · LICENSED PROFESSIONAL ENGINEER

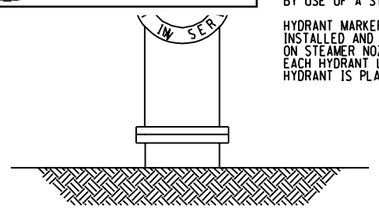

- 12" DIAMETER x 1/8" THICK (SOLID) RED OR ORANGE PLASTIC DISK TO READ: "NOT IN SERVICE"

ALL LETTERING SHALL BE 2" MINIMUM AND PAINTED BLACK BY USE OF A STENCIL.

HYDRANT MARKER TO BE INSTALLED AND MAINTAINED ON STEAMER NOZZLE OF EACH HYDRANT UNTIL HYDRANT IS PLACED IN SERVICE.

HYDRANT MARKER

NOT TO SCALE

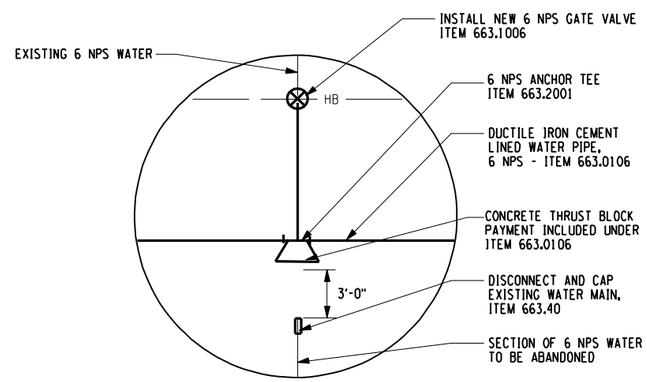

WM-B5 CONNECTION DETAIL

NOT TO SCALE

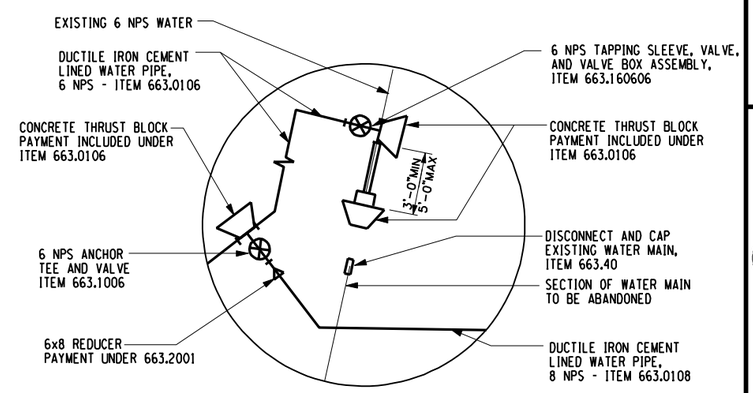

WM-B13 & WM-B14 CONNECTION DETAIL

NOT TO SCALE

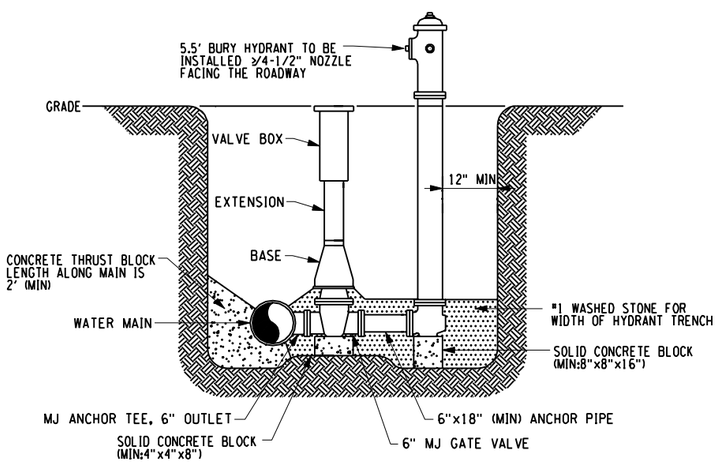

PERPENDICULAR HYDRANT ASSEMBLY

NOT TO SCALE

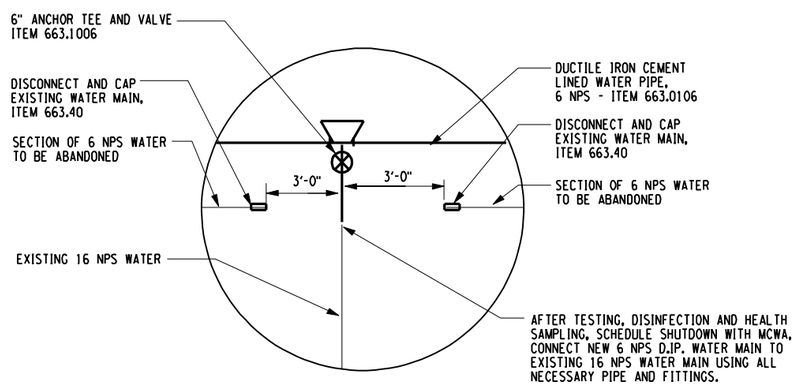

WM-B7 CONNECTION DETAIL

NOT TO SCALE

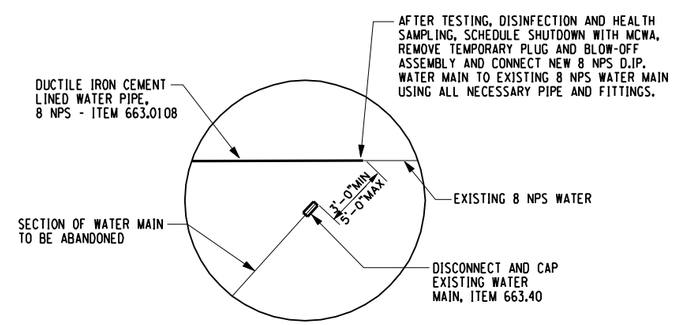

WM-B22 CONNECTION DETAIL

NOT TO SCALE

NO AS-BUILT REVISIONS

NO.	DATE	BY:	REVISION

Barton & Loguidice, P.C.

DRAFTED BY: JMW/JJB

DESIGN BY: JMW

DEPARTMENT OF TRANSPORTATION
50 WEST MAIN STREET, SUITE 6100
ROCHESTER, NEW YORK 14614-1231

UNAUTHORIZED ALTERATION OR ADDITION TO THIS DRAWING IS A VIOLATION OF THE NEW YORK STATE EDUCATION LAW ARTICLE 145, SECTION 7209

PROJECT NAME	WESTFALL ROAD
LIMITS	E. HENRIETTA ROAD TO LAC-DE-VILLE BLVD
TOWN	BRIGHTON
CITY	ROCHESTER
CAPITAL PROJECT NO.	4753.77
BRIDGE IDENTIFICATION NO.	N.A.

MISCELLANEOUS DETAILS (WATER MAIN)

SCALE:

DATE ISSUED: 4/25/2014

DRAWING NO. MD-11

SHEET NO. 47 OF 112

Workspace\PLOT\NYSDOT\NYSDOT_SIZE_B.TBL
Workspace\Plot\NYSDOT\NYSDOT_HPLJ5200_B.plt

FILE NAME = I:\Shared\1000\1066005\AS-BUILTS\1066005_md_11.dgn
DATE = 4/25/2014
TIME = 10:13:06 AM

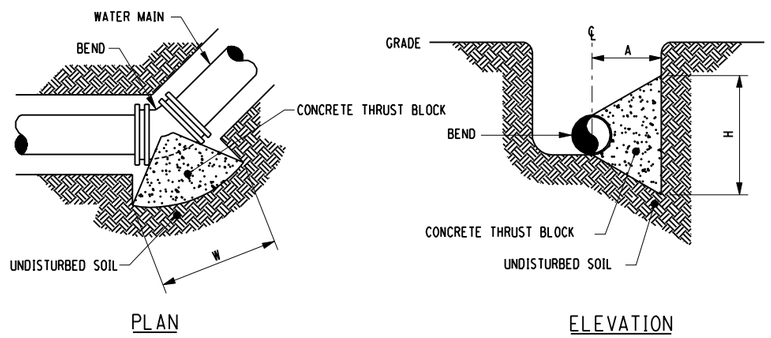

HORIZONTAL THRUST BLOCK FOR BENDS

NOT TO SCALE

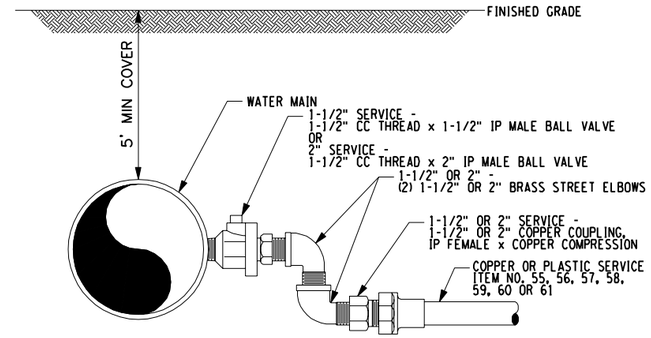

NOTE:

1. CORPORATION SWING JOINT ASSEMBLY INSTALLED PARALLEL WITH WATER MAIN (ROTATE ELBOWS)

1-1/2" AND 2" SERVICE INSTALLATION

NOT TO SCALE

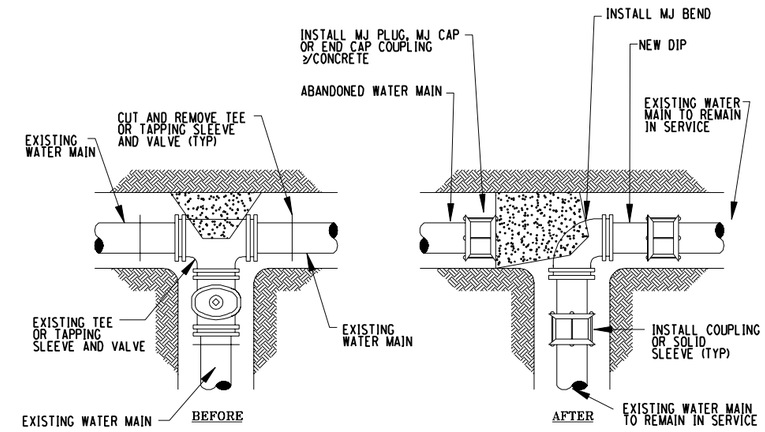

WATER MAIN ABANDONMENT - TYPE 3

NOT TO SCALE

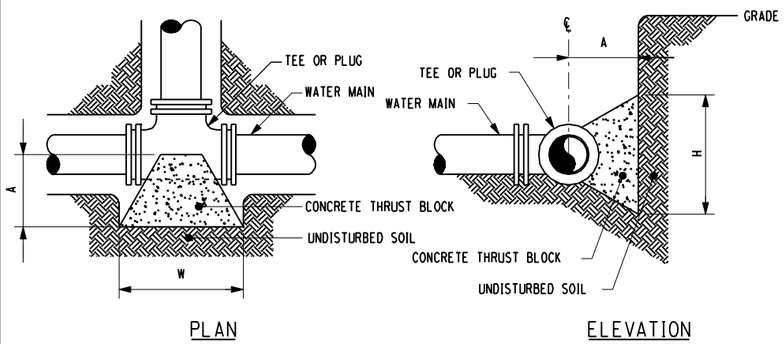

HORIZONTAL THRUST BLOCK FOR TEES AND PLUGS

NOT TO SCALE

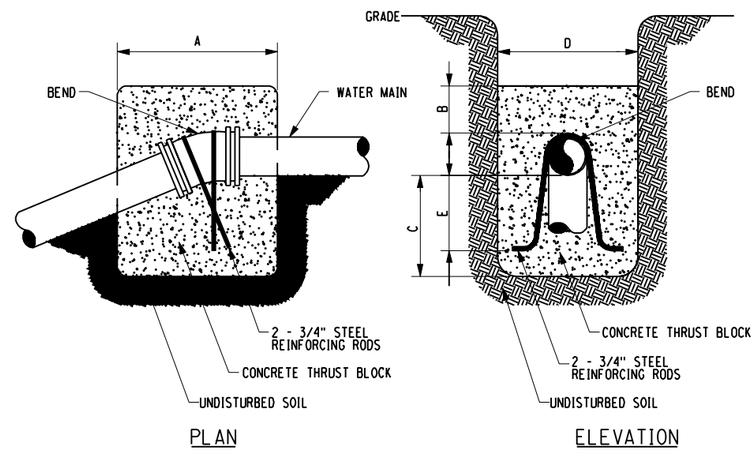

VERTICAL THRUST BLOCK

NOT TO SCALE

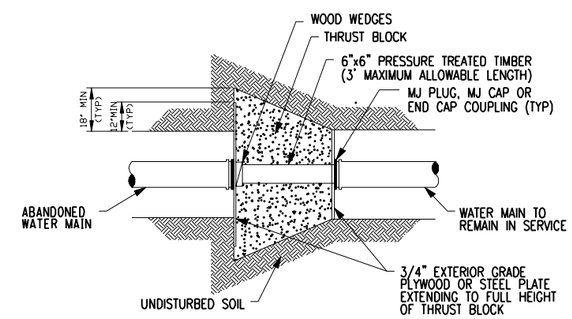

NOTE:
SEE TYPICAL THRUST BLOCK DETAIL FOR MINIMUM SURFACE BEARING AREA.

WATER MAIN ABANDONMENT - TYPE 2

NOT TO SCALE

MINIMUM HORIZONTAL THRUST BLOCK DIMENSIONS, IN FEET, TO BE POURED AGAINST UNDISTURBED SOIL			
FITTING	H	W	A
8" x 11-1/4° BEND	1.0	1.0	1.5
8" x 22-1/2° BEND	1.0	1.5	1.5
8" x 45° BEND	1.5	2.0	1.5
8" x 90° BEND	2.0	2.5	1.5
8" TEE OR PLUG	1.5	[illegible]	[illegible]
12" x 11-1/4° BEND	1.0	[illegible]	[illegible]
12" x 22-1/2° BEND	1.5	[illegible]	[illegible]
12" x 45° BEND	2.0	[illegible]	[illegible]
12" x 90° BEND	2.5	[illegible]	[illegible]
12" TEE OR PLUG	2.0	[illegible]	[illegible]
16" x 11-1/4° BEND	1.5	[illegible]	[illegible]
16" x 22-1/2° BEND	2.0	[illegible]	[illegible]
16" x 45° BEND	2.5	[illegible]	[illegible]
16" x 90° BEND	3.5	[illegible]	[illegible]
16" TEE OR PLUG	3.0	[illegible]	[illegible]

NOTE: WIDTH (W) OF BLOCK SHALL NOT EXCEED TWICE THE HEIG... .....

"I hereby certify by my signature and seal below, that I have prepared this record drawing which is, to the best of my knowledge and in my professional opinion, a true representation of the work as constructed on the Westfall Road Improvements Phase III, Project No. 1409."

STATE OF NEW YORK · MATTHEW J. SCHOLLEY · LICENSED PROFESSIONAL ENGINEER · LIC. NO. 069983

BEND	MIN. VOLUME OF CONCRETE	MINIMUM ALLOWABLE DIMENSIONS FOR VERTICAL THRUST BLOCKS (IN FEET)				
	DIMENSIONS	A	B	C	D	E
	1.00 CY	3.0	1.0	1.3	3.0	1.0
	1.50 CY	4.0	1.0	1.8	3.0	1.5
	2.50 CY	6.0	1.5	2.0	3.0	1.7
	1.50 CY	5.0	1.0	1.5	3.0	1.3
	3.00 CY	6.0	1.5	2.5	3.0	2.0
	5.50 CY	8.0	2.5	3.0	3.0	2.5
	2.50 CY	5.0	1.0	2.1	3.0	1.8
	5.25 CY	7.5	2.0	2.6	3.5	2.3
	9.50 CY	9.0	2.5	3.4	4.0	3.0

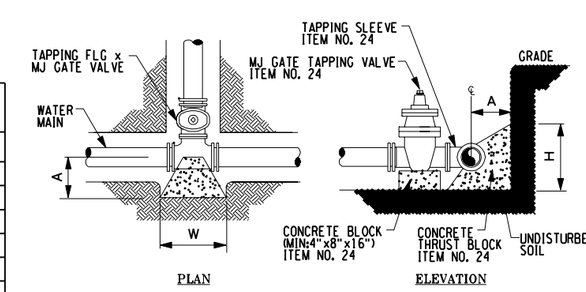

NOTE: VALVE TO BE INSTALLED DIRECTLY ON TAPPING SLEEVE.

TAPPING SLEEVE AND VALVE

NOT TO SCALE

NO.	DATE	BY:	REVISION
NO AS-BUILT REVISIONS			

Barton & Loguidice, P.C.

DRAFTED BY: JMW/JJB
DESIGN BY: JMW

DEPARTMENT OF TRANSPORTATION
50 WEST MAIN STREET, SUITE 6100
ROCHESTER, NEW YORK 14614-1231

UNAUTHORIZED ALTERATION OR ADDITION TO THIS DRAWING IS A VIOLATION OF THE NEW YORK STATE EDUCATION LAW ARTICLE 145, SECTION 7209

PROJECT NAME: WESTFALL ROAD
LIMITS: E. HENRIETTA ROAD TO LAC-DE-VILLE BLVD
TOWN: BRIGHTON
CITY: ROCHESTER
CAPITAL PROJECT NO.: 4753.77
BRIDGE IDENTIFICATION NO.: N.A.

MISCELLANEOUS DETAILS (WATER MAIN)

SCALE:
DATE ISSUED: 4/25/2014
DRAWING NO. MD-12
SHEET NO. 48 OF 112

mek
I:\MicroStation\Workspace\PLOT\NYSDOT\NYSDOT_SIZE_B.TBL
I:\MicroStation\Workspace\Plot\NYSDOT\NYSDOT_HPLJ5200_B.plt

FILE NAME = I:\Shared\1000\1066005\AS-BUILTS\1066005_md.12.dgn
DATE = 4/25/2014
TIME = 10:13:30 AM

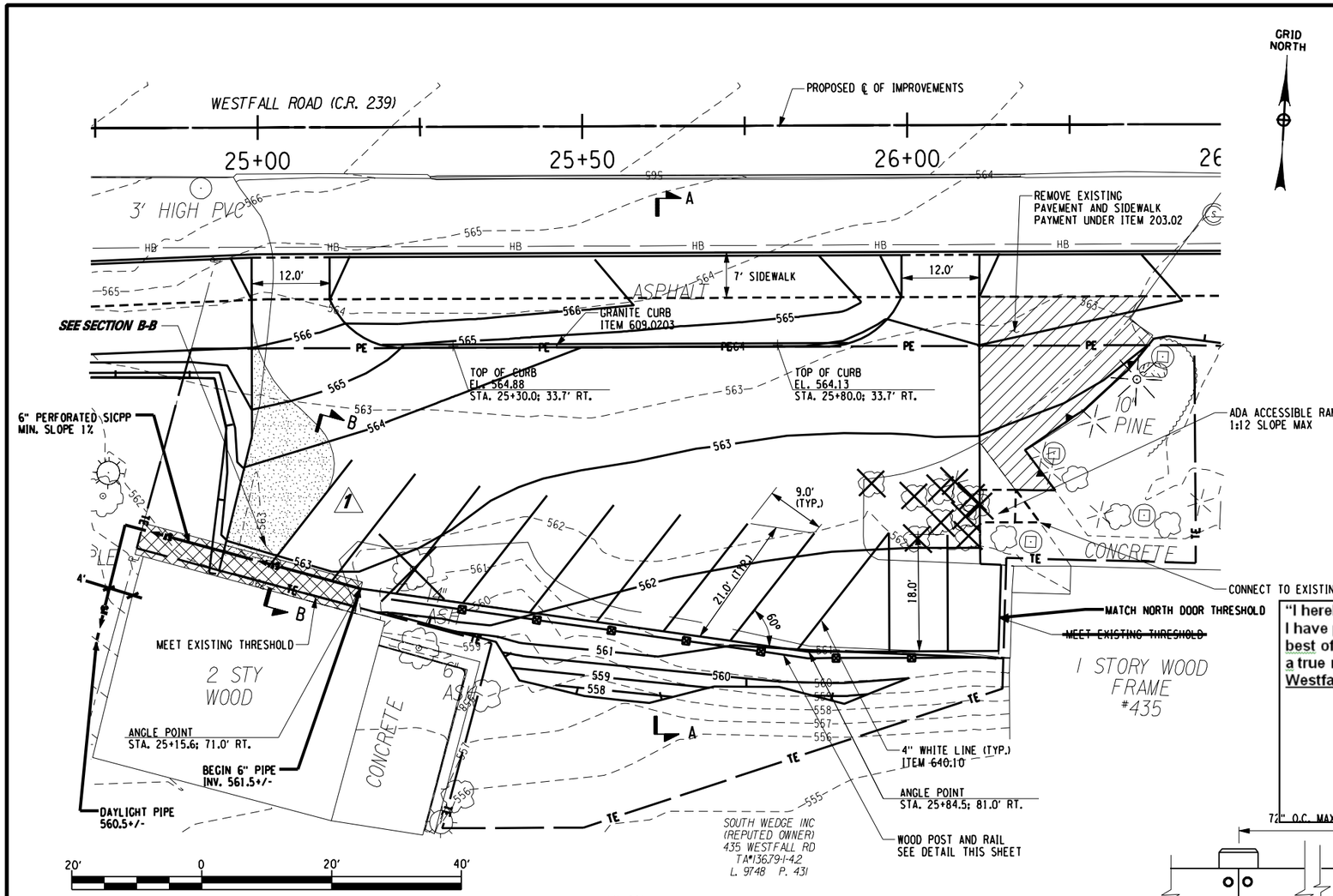

PLAN

REFER TO DWG. PL-5 FOR LOCATION

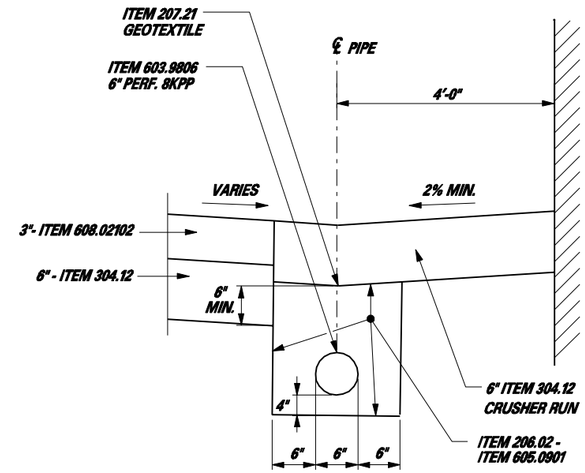

SECTION B-B

"I hereby certify by my signature and seal below, that I have prepared this record drawing which is, to the best of my knowledge and in my professional opinion, a true representation of the work as constructed on the Westfall Road Improvements Phase III, Project No. 1409."

STATE OF NEW YORK · MATTHEW J. SCANDIFFE · No. 069983 · LICENSED PROFESSIONAL ENGINEER

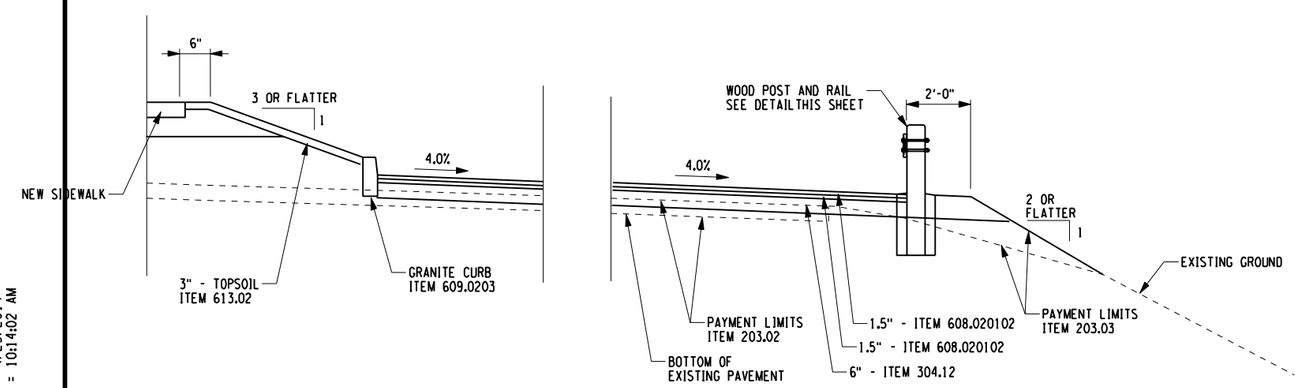

SECTION A-A

NOT TO SCALE

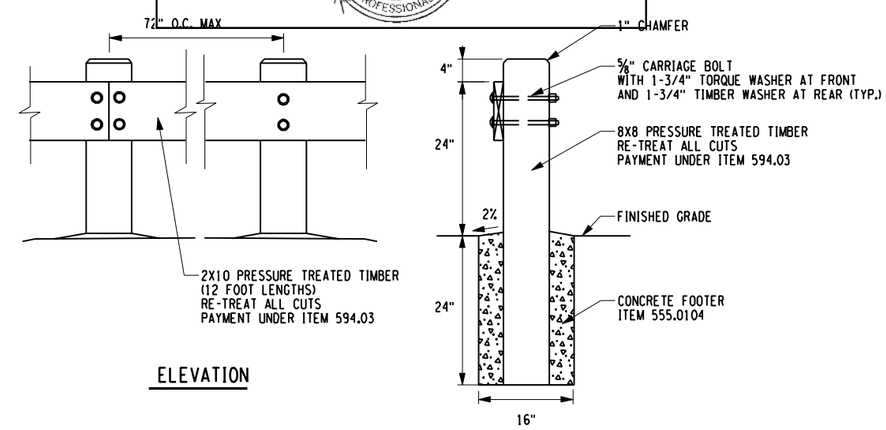

ELEVATION

SECTION

WOOD POST AND RAIL

NOT TO SCALE

NO.	DATE	BY:	REVISION
1	10/17	JMW	ADDED SECTION B-B

Barton & Loguidice, P.C.

DRAFTED BY: JMW/JJB
DESIGN BY: JMW

DEPARTMENT OF TRANSPORTATION
50 WEST MAIN STREET, SUITE 6100
ROCHESTER, NEW YORK 14614-1231

UNAUTHORIZED ALTERATION OR ADDITION TO THIS DRAWING IS A VIOLATION OF THE NEW YORK STATE EDUCATION LAW ARTICLE 145, SECTION 7209

PROJECT NAME: WESTFALL ROAD
LIMITS: E. HENRIETTA ROAD TO LAC-DE-VILLE BLVD
TOWN: BRIGHTON
CITY: ROCHESTER
CAPITAL PROJECT NO.: 4753.77
BRIDGE IDENTIFICATION NO.: N.A.

MISCELLANEOUS DETAILS

SCALE: AS SHOWN
DATE ISSUED: 4/25/2014
DRAWING NO. MD-13
SHEET NO. 49 OF 112

mek
I:\MicroStation\Workspace\PLOT\NYSDOT\NYSDOT_SIZE_B.TBL
I:\MicroStation\Workspace\Plot\NYSDOT\NYSDOT_HPLJ5200_B.plt

FILE NAME = I:\Shared\1000\1066005\AS-BUILTS\1066005_md.13 with contours.dgn
DATE = 4/25/2014
TIME = 10:14:02 AM

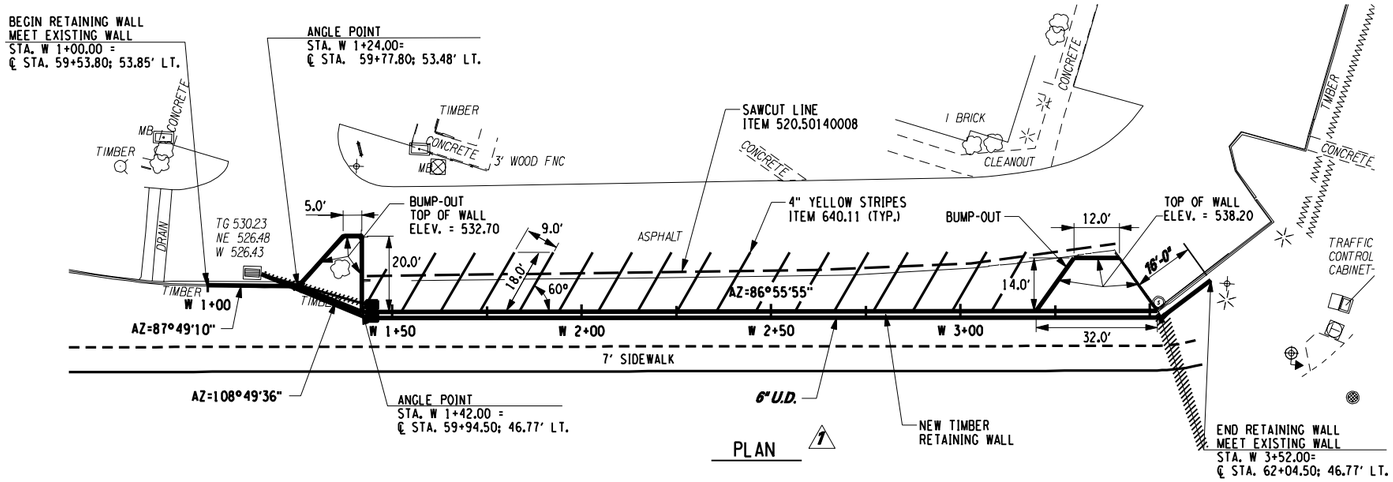

PLAN 1

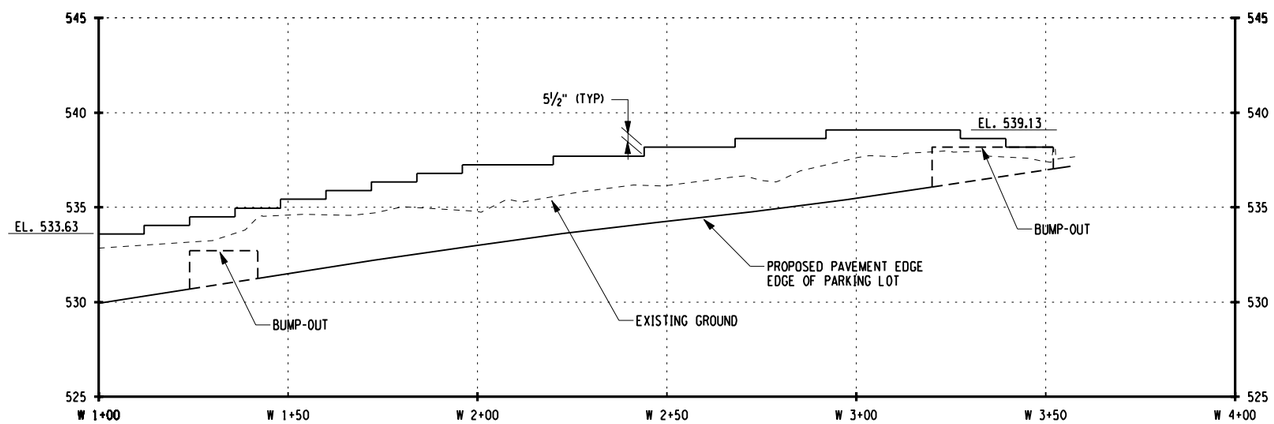

PROFILE

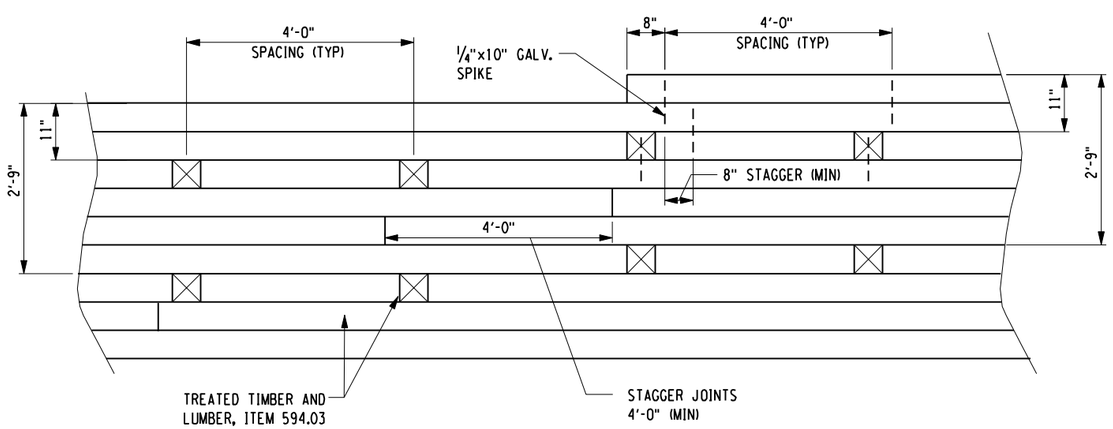

TYPICAL ELEVATION

SCALE: ⅜" = 1'-0"

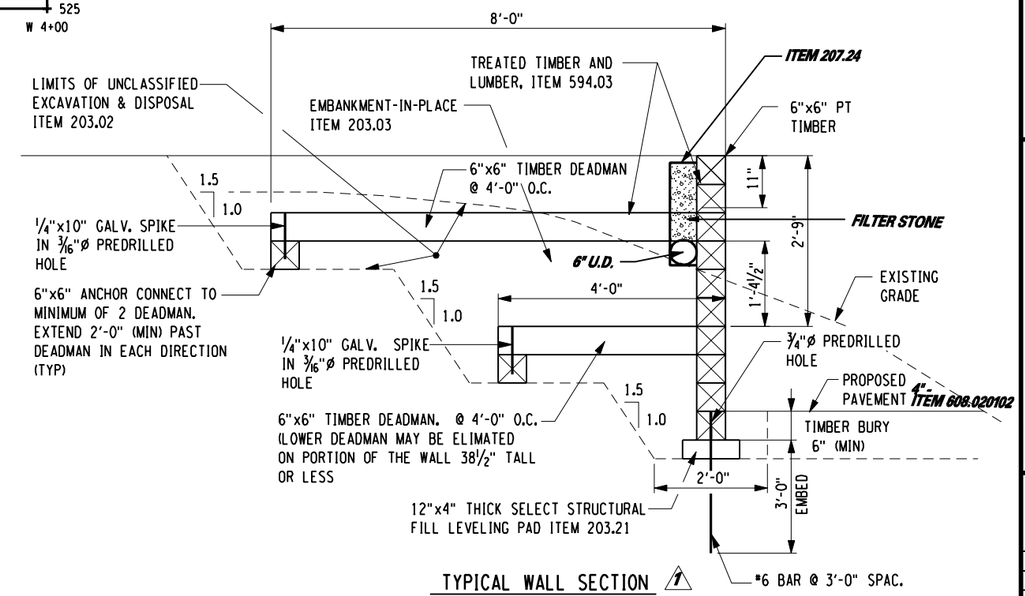

TYPICAL WALL SECTION 1

SCALE: ⅜" = 1'-0"

"I hereby certify by my signature and seal below, that I have prepared this record drawing which is, to the best of my knowledge and in my professional opinion, a true representation of the work as constructed on the Westfall Road Improvements Phase III, Project No. 1409."

STATE OF NEW YORK · MATTHEW J. SCHOLEY · No. 069983 · LICENSED PROFESSIONAL ENGINEER

NO.	DATE	BY:	REVISION
1	06/07	JMW	REVISED PLAN & WALL SECTION

Barton & Loguidice, P.C.

DRAFTED BY: JMW/JJB

DESIGN BY: JMW

DEPARTMENT OF TRANSPORTATION
50 WEST MAIN STREET, SUITE 6100
ROCHESTER, NEW YORK 14614-1231

UNAUTHORIZED ALTERATION OR ADDITION TO THIS DRAWING IS A VIOLATION OF THE NEW YORK STATE EDUCATION LAW ARTICLE 145, SECTION 7209

PROJECT NAME: WESTFALL ROAD
LIMITS: E. HENRIETTA ROAD TO LAC-DE-VILLE BLVD
TOWN: BRIGHTON
CITY: ROCHESTER
CAPITAL PROJECT NO.: 4753.77
BRIDGE IDENTIFICATION NO.: N.A.

MISCELLANEOUS DETAILS (RETAINING WALL)

SCALE: AS SHOWN
DATE ISSUED: 4/25/2014
DRAWING NO. MD-14
SHEET NO. 50 OF 112

mek
I:\MicroStation\Workspace\PLOT\NYSDOT\NYSDOT_SIZE_B.TBL
I:\MicroStation\Workspace\Plot\NYSDOT\NYSDOT_HPLJ5200_B.plt

FILE NAME = I:\Shared\1000\1066005\AS-BUILTS\1066005_md_14.dgn
DATE = 4/25/2014
TIME = 10:14:46 AM

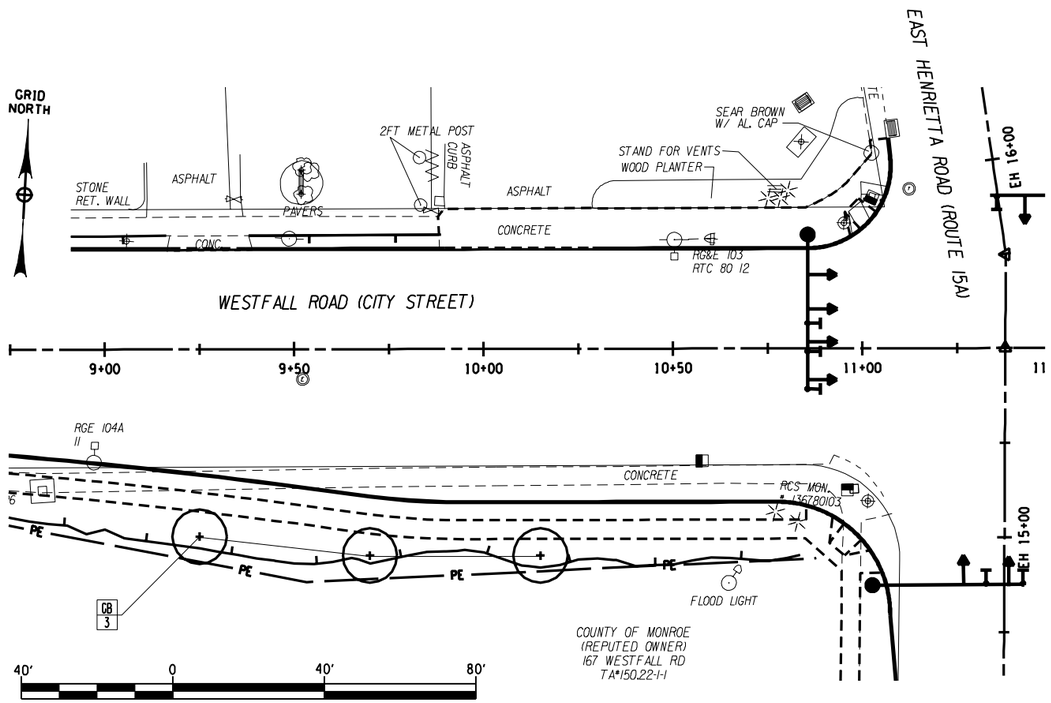

LANDSCAPING PLAN
167 WESTFALL ROAD

PLANT LIST							
QUANT.	KEY	LATIN NAME	COMMON NAME	CAL.	ROOTS	HT. OR SP.	REMARKS
MAJOR DECIDUOUS TREES– ITEM 611.010154							
6	EA	Acer rubrum	Armstrong Red Maple	2"	B&B		
3	EA	Ginko biloba	Princeton Sentry Ginko	2"	B&B		Male only
DECIDUOUS SHRUBS – ITEM 611.040113							
6	EA	Euonymus alata 'Compacta'	Dwarf Burningbush		B&B	24"	4' O.C.
54	SB	Spiraea x bumalda	Anthony Waterer Spiraea		#3 cont.	24"	3' O.C.
		'Anthony Waterer'					
EVERGREEN SHRUBS – ITEM 611.050113							
24	JC	Juniperus chinensis 'Sea Green'	Sea Green Juniper		B&B	18"	4' O.C.
34	JB	Juniperus 'Blue Star'	Spreading Juniper		#2 cont.	18"	3' O.C.
10	TD	Taxus x media 'densiformis'	Dense Yew		B&B	18–24"	4' O.C.

LEGEND:

B & B – Balled & Burlapped
#2 – 2 Gallon Container
BR – Bare Root
Cal. – Caliper
Sp. – Spread
Spr. – Spring Planting Only
Ht. – Height
O.C. – On Center

"I hereby certify by my signature and seal below, that I have prepared this record drawing which is, to the best of my knowledge and in my professional opinion, a true representation of the work as constructed on the Westfall Road Improvements Phase III, Project No. 1409."

STATE OF NEW YORK · MATTHEW J. SCHOFIELD · 069982 · LICENSED PROFESSIONAL ENGINEER

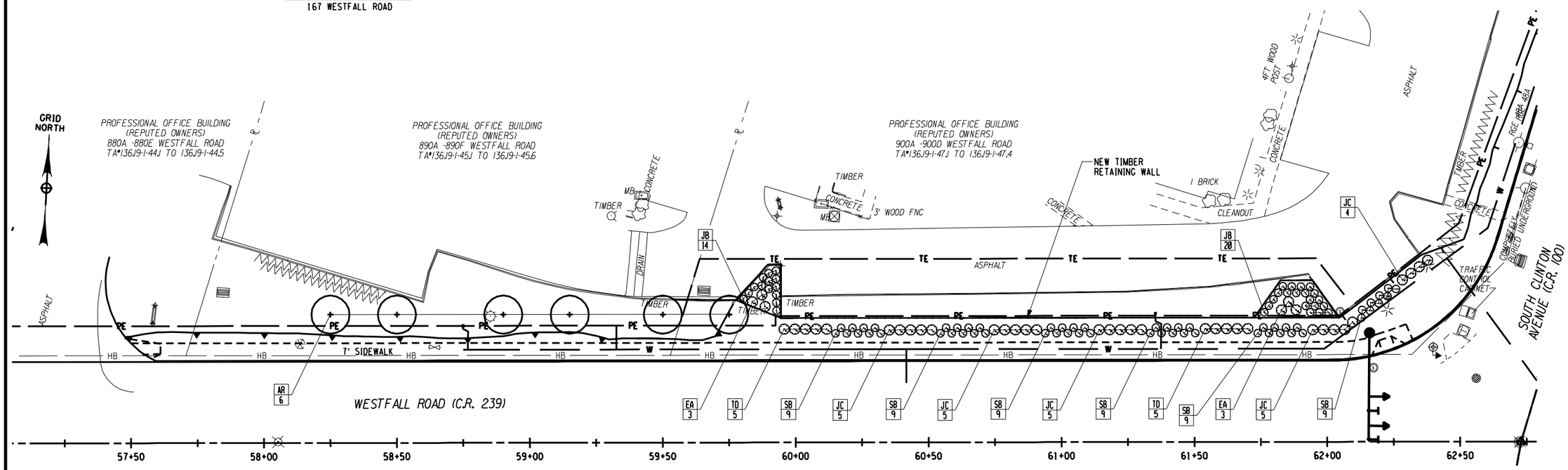

LANDSCAPING PLAN
890A-890F WESTFALL ROAD
900A-900D WESTFALL ROAD

NO AS-BUILT REVISIONS

NO.	DATE	BY:	REVISION

Barton & Loguidice, P.C.

DRAFTED BY: AKW/JMW
DESIGN BY: AKW

DEPARTMENT OF TRANSPORTATION
50 WEST MAIN STREET, SUITE 6100
ROCHESTER, NEW YORK 14614-1231

UNAUTHORIZED ALTERATION OR ADDITION TO THIS DRAWING IS A VIOLATION OF THE NEW YORK STATE EDUCATION LAW ARTICLE 145, SECTION 7209

PROJECT NAME: WESTFALL ROAD
LIMITS: E. HENRIETTA ROAD TO LAC-DE-VILLE BLVD
TOWN: BRIGHTON
CITY: ROCHESTER
CAPITAL PROJECT NO.: 4753.77
BRIDGE IDENTIFICATION NO.: N.A.

LANDSCAPING PLAN

SCALE: AS SHOWN
DATE ISSUED: 4/25/2014
DRAWING NO. LS-1
SHEET NO. 51 OF 112

mek
I:\MicroStation\Workspace\PLOT\NYSDOT\NYSDOT_SIZE_B.TBL
I:\MicroStation\Workspace\Plot\NYSDOT\NYSDOT_HPLJ5200_B.plt

FILE NAME = L:\Shared\1000\1066005\AS-BUILTS\1066005_LS_01.dgn
DATE = 4/25/2014
TIME = 10:15:37 AM

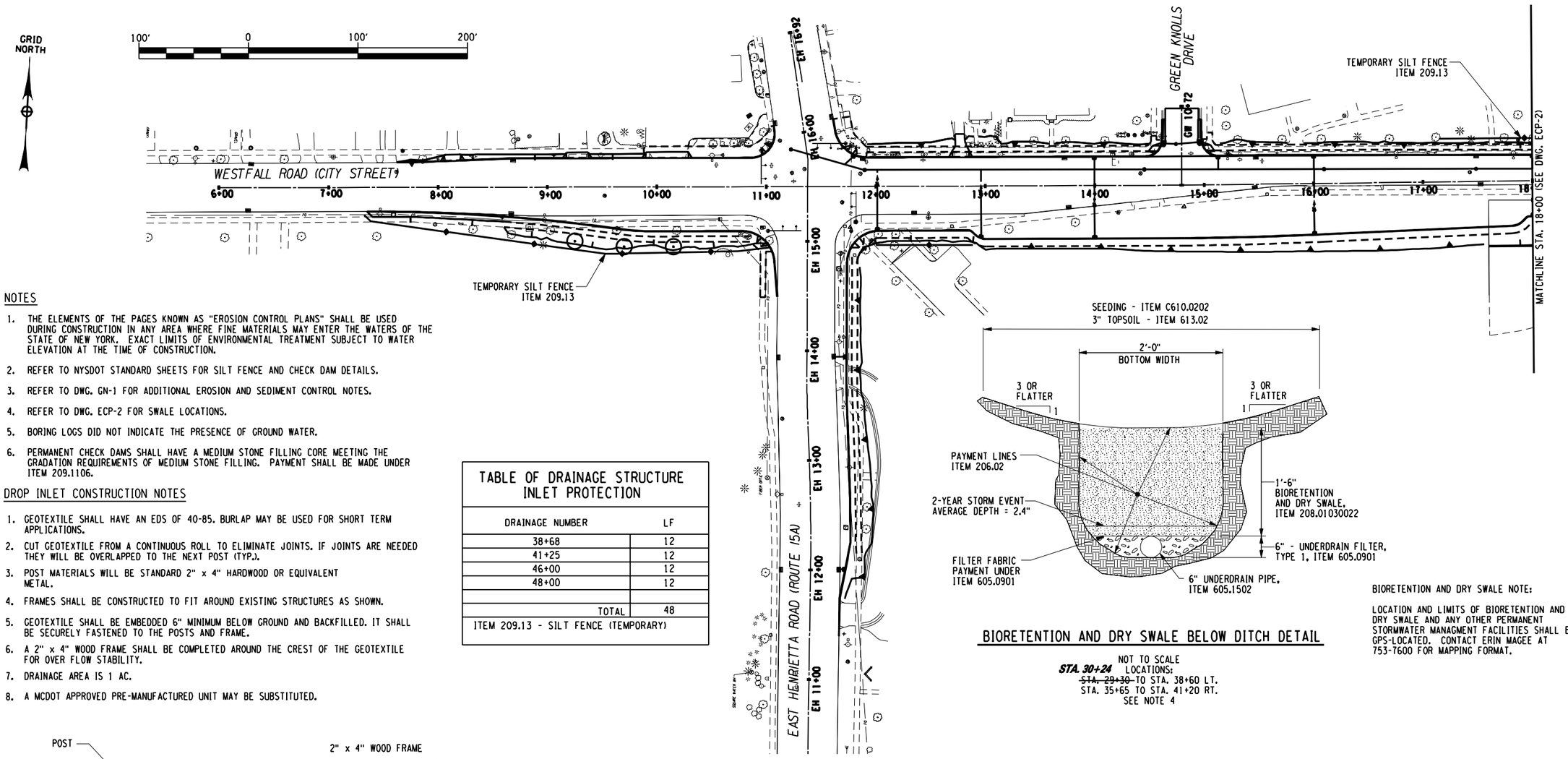

NOTES

1. THE ELEMENTS OF THE PAGES KNOWN AS "EROSION CONTROL PLANS" SHALL BE USED DURING CONSTRUCTION IN ANY AREA WHERE FINE MATERIALS MAY ENTER THE WATERS OF THE STATE OF NEW YORK. EXACT LIMITS OF ENVIRONMENTAL TREATMENT SUBJECT TO WATER ELEVATION AT THE TIME OF CONSTRUCTION.
2. REFER TO NYSDOT STANDARD SHEETS FOR SILT FENCE AND CHECK DAM DETAILS.
3. REFER TO DWG. GN-1 FOR ADDITIONAL EROSION AND SEDIMENT CONTROL NOTES.
4. REFER TO DWG. ECP-2 FOR SWALE LOCATIONS.
5. BORING LOGS DID NOT INDICATE THE PRESENCE OF GROUND WATER.
6. PERMANENT CHECK DAMS SHALL HAVE A MEDIUM STONE FILLING CORE MEETING THE GRADATION REQUIREMENTS OF MEDIUM STONE FILLING. PAYMENT SHALL BE MADE UNDER ITEM 209.1106.

DROP INLET CONSTRUCTION NOTES

1. GEOTEXTILE SHALL HAVE AN EDS OF 40-85. BURLAP MAY BE USED FOR SHORT TERM APPLICATIONS.
2. CUT GEOTEXTILE FROM A CONTINUOUS ROLL TO ELIMINATE JOINTS. IF JOINTS ARE NEEDED THEY WILL BE OVERLAPPED TO THE NEXT POST (TYP.).
3. POST MATERIALS WILL BE STANDARD 2" x 4" HARDWOOD OR EQUIVALENT METAL.
4. FRAMES SHALL BE CONSTRUCTED TO FIT AROUND EXISTING STRUCTURES AS SHOWN.
5. GEOTEXTILE SHALL BE EMBEDDED 6" MINIMUM BELOW GROUND AND BACKFILLED. IT SHALL BE SECURELY FASTENED TO THE POSTS AND FRAME.
6. A 2" x 4" WOOD FRAME SHALL BE COMPLETED AROUND THE CREST OF THE GEOTEXTILE FOR OVER FLOW STABILITY.
7. DRAINAGE AREA IS 1 AC.
8. A MCDOT APPROVED PRE-MANUFACTURED UNIT MAY BE SUBSTITUTED.

TABLE OF DRAINAGE STRUCTURE INLET PROTECTION

DRAINAGE NUMBER	LF
38+68	12
41+25	12
46+00	12
48+00	12
TOTAL	48

ITEM 209.13 - SILT FENCE (TEMPORARY)

BIORETENTION AND DRY SWALE BELOW DITCH DETAIL

NOT TO SCALE
STA. 30+24 LOCATIONS:
~~STA. 29+30~~ TO STA. 38+60 LT.
STA. 35+65 TO STA. 41+20 RT.
SEE NOTE 4

BIORETENTION AND DRY SWALE NOTE:

LOCATION AND LIMITS OF BIORETENTION AND DRY SWALE AND ANY OTHER PERMANENT STORMWATER MANAGMENT FACILITIES SHALL BE GPS-LOCATED. CONTACT ERIN MAGEE AT 753-7600 FOR MAPPING FORMAT.

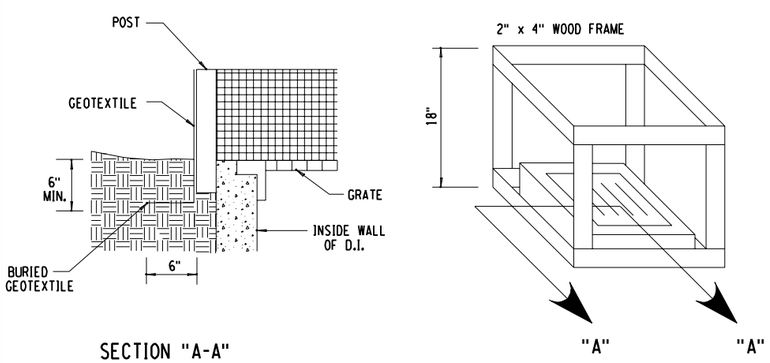

SECTION "A-A"

FILTER FABRIC DROP INLET PROTECTION

PAYMENT UNDER ITEM 209.13
NOT TO SCALE

"I hereby certify by my signature and seal below, that I have prepared this record drawing which is, to the best of my knowledge and in my professional opinion, a true representation of the work as constructed on the Westfall Road Improvements Phase III, Project No. 1409."

STATE OF NEW YORK · MATTHEW J. SCANLEY · No. 069983 · LICENSED PROFESSIONAL ENGINEER

TABLE OF TEMPORARY CHECK DAMS

STATIONS	SIDE	EACH
30+75 ~~29+61~~ TO 36+50	LT	~~14~~ ***11***
37+65 TO 39+65	RT	2
	TOTAL	~~16~~ ***13***

ITEM 209.110101 - CHECK DAM (DITCH BOTTOM WIDTH > 0.0 FT TO 3.0 FT), STONE TEMPORARY

TABLE OF PERMANENT CHECK DAMS

STATIONS	SIDE	EACH
30+75 ~~29+61~~ TO ~~36+50~~ ***38+43***	LT	~~14~~ ***11***
37+65 TO 39+65	RT	2
	TOTAL	16

ITEM 209.1106 - CHECK DAM, STONE - PERMANENT (SEE NOTE 6)

TABLE OF SILT FENCE

STATIONS	SIDE	LENGTH (FT)
7+32 TO 11+03	RT	371
12+00 TO 13+00	RT	100
17+15 TO 21+75	LT	460
17+59 TO 18+98	RT	139
19+51 TO 21+51	RT	200
22+25 TO 24+25	LT	200
27+03 TO 32+76	RT	573
47+10 TO 48+10	RT	100
48+49 TO 52+67	RT	418
52+96 TO 56+89	RT	393
55+74 TO 56~~+86~~ ***78***	LT	~~112~~ ***104***
59+88 TO ~~63+09~~ ***62+05***	LT	321
63+43 TO 66+03	RT	260
66+40 TO 72+37	RT	597
62+05 TO SC14+00	***LT***	***198***
	TOTAL	~~4244~~ ***4434***

ITEM 209.13 - SILT FENCE (TEMPORARY)

NO.	DATE	BY:	REVISION
1	10/23	JMW	REVISED TABLES

Barton & Loguidice, P.C.

DRAFTED BY: JMW/JJB
DESIGN BY: JMW

DEPARTMENT OF TRANSPORTATION
50 WEST MAIN STREET, SUITE 6100
ROCHESTER, NEW YORK 14614-1231

UNAUTHORIZED ALTERATION OR ADDITION TO THIS DRAWING IS A VIOLATION OF THE NEW YORK STATE EDUCATION LAW ARTICLE 145, SECTION 7209

PROJECT NAME: WESTFALL ROAD
LIMITS: E. HENRIETTA ROAD TO LAC-DE-VILLE BLVD
TOWN: BRIGHTON
CITY: ROCHESTER
CAPITAL PROJECT NO.: 4753.77
BRIDGE IDENTIFICATION NO.: N.A.

EROSION CONTROL PLAN

SCALE: AS SHOWN
DATE ISSUED: 4/25/2014
DRAWING NO. ECP-1
SHEET NO. 52 OF 112

mek
I:\MicroStation\Workspace\PLOT\NYSDOT\NYSDOT_SIZE_B.TBL
I:\MicroStation\Workspace\Plot\NYSDOT\NYSDOT_HPLJ5200_B.plt

FILE NAME = I:\Shared\1000\1066005\AS-BUILTS\1066005_ecp_01.dgn
DATE = 4/25/2014
TIME = 10:25:49 AM

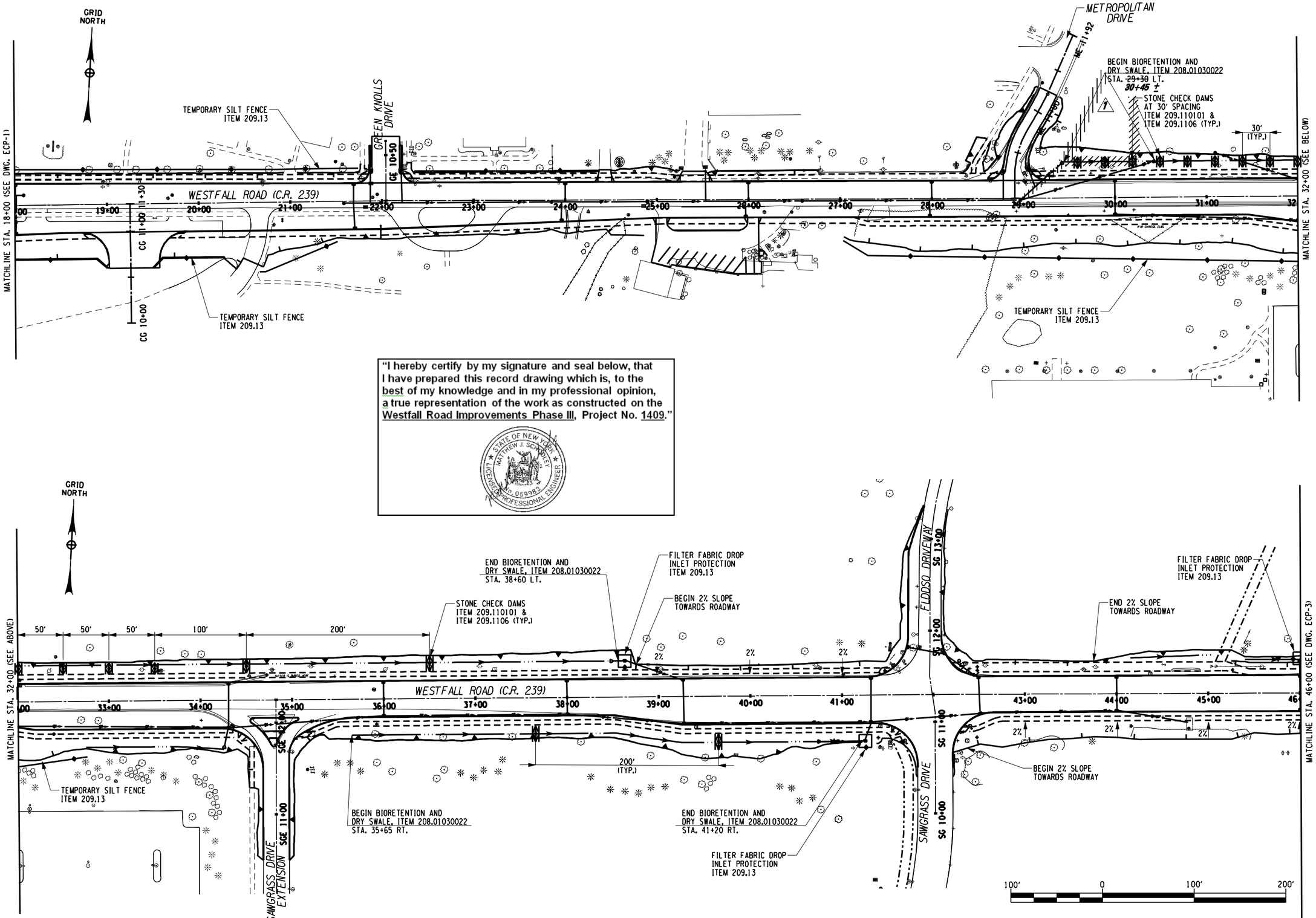

"I hereby certify by my signature and seal below, that I have prepared this record drawing which is, to the best of my knowledge and in my professional opinion, a true representation of the work as constructed on the Westfall Road Improvements Phase III, Project No. 1409."

STATE OF NEW YORK · MATTHEW J. SCHOLTZ · No. 069983 · LICENSED PROFESSIONAL ENGINEER

NO.	DATE	BY:	REVISION
1	06/07	JMW	REVISED DRY SWALE

Barton & Loguidice, P.C.

DRAFTED BY: JMW/JJB

DESIGN BY: JMW

DEPARTMENT OF TRANSPORTATION
50 WEST MAIN STREET, SUITE 6100
ROCHESTER, NEW YORK 14614-1231

UNAUTHORIZED ALTERATION OR ADDITION TO THIS DRAWING IS A VIOLATION OF THE NEW YORK STATE EDUCATION LAW ARTICLE 145, SECTION 7209

PROJECT NAME: WESTFALL ROAD
LIMITS: E. HENRIETTA ROAD TO LAC-DE-VILLE BLVD
TOWN: BRIGHTON
CITY: ROCHESTER
CAPITAL PROJECT NO.: 4753.77
BRIDGE IDENTIFICATION NO.: N.A.

EROSION CONTROL PLAN

SCALE: AS SHOWN
DATE ISSUED: 4/25/2014
DRAWING NO. ECP-2
SHEET NO. 53 OF 112

mek
I:\MicroStation\Workspace\PLOT\NYSDOT\NYSDOT_SIZE_B.TBL
I:\MicroStation\Workspace\Plot\NYSDOT\NYSDOT_HPLJ5200_B.plt

FILE NAME = I:\Shared\1000\1066005\AS-BUILTS\1066005_ecp_02.dgn
DATE = 4/25/2014
TIME = 10:26:12 AM

mek
I:\MicroStation\Workspace\PLOT\NYSDOT\NYSDOT_SIZE_B.TBL
I:\MicroStation\Workspace\Plot\NYSDOT\NYSDOT_HPLJ5200_B.plt

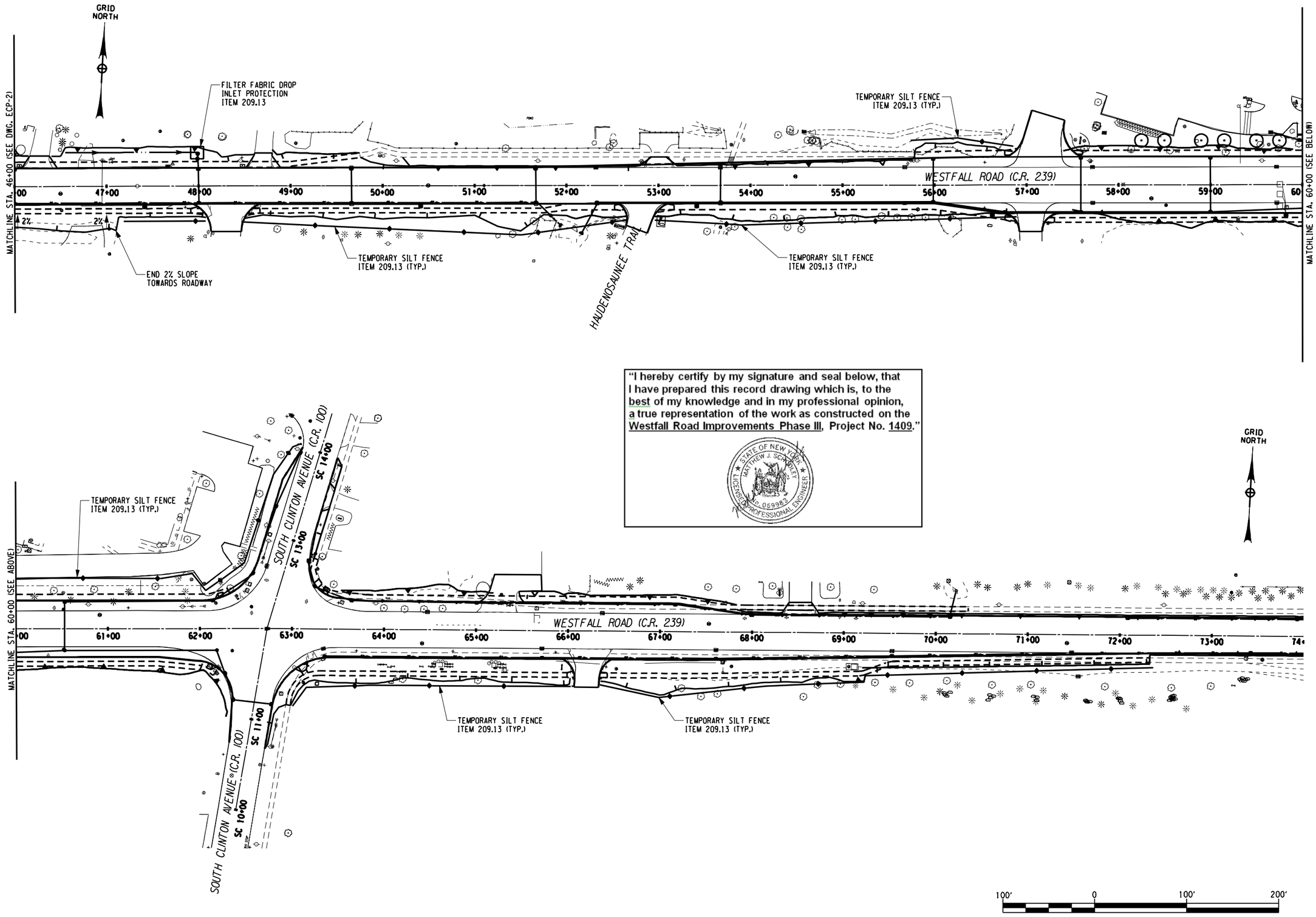

"I hereby certify by my signature and seal below, that I have prepared this record drawing which is, to the best of my knowledge and in my professional opinion, a true representation of the work as constructed on the Westfall Road Improvements Phase III, Project No. 1409."

STATE OF NEW YORK · MATTHEW J. SCANLEY · LICENSED PROFESSIONAL ENGINEER · NO. 069985

NO.	DATE	BY:	REVISION
NO AS-BUILT REVISIONS			

Barton & Loguidice, P.C.

DRAFTED BY: JMW/JJB
DESIGN BY: JMW

DEPARTMENT OF TRANSPORTATION
50 WEST MAIN STREET, SUITE 6100
ROCHESTER, NEW YORK 14614-1231

UNAUTHORIZED ALTERATION OR ADDITION TO THIS DRAWING IS A VIOLATION OF THE NEW YORK STATE EDUCATION LAW ARTICLE 145, SECTION 7209

PROJECT NAME: WESTFALL ROAD
LIMITS: E. HENRIETTA ROAD TO LAC-DE-VILLE BLVD
TOWN: BRIGHTON
CITY: ROCHESTER
CAPITAL PROJECT NO.: 4753.77
BRIDGE IDENTIFICATION NO.: N.A.

EROSION CONTROL PLAN

SCALE: AS SHOWN
DATE ISSUED: 4/25/2014
DRAWING NO. ECP-3
SHEET NO. 54 OF 112

FILE NAME = I:\Shared\1000\1066005\AS-BUILTS\1066005_ecp_03.dgn
DATE = 4/25/2014
TIME = 10:26:49 AM

"I hereby certify by my signature and seal below, that I have prepared this record drawing which is, to the best of my knowledge and in my professional opinion, a true representation of the work as constructed on the Westfall Road Improvements Phase III, Project No. 1409."

STATE OF NEW YORK · MATHEW J. SCHOLLER · No. 069983 · LICENSED PROFESSIONAL ENGINEER

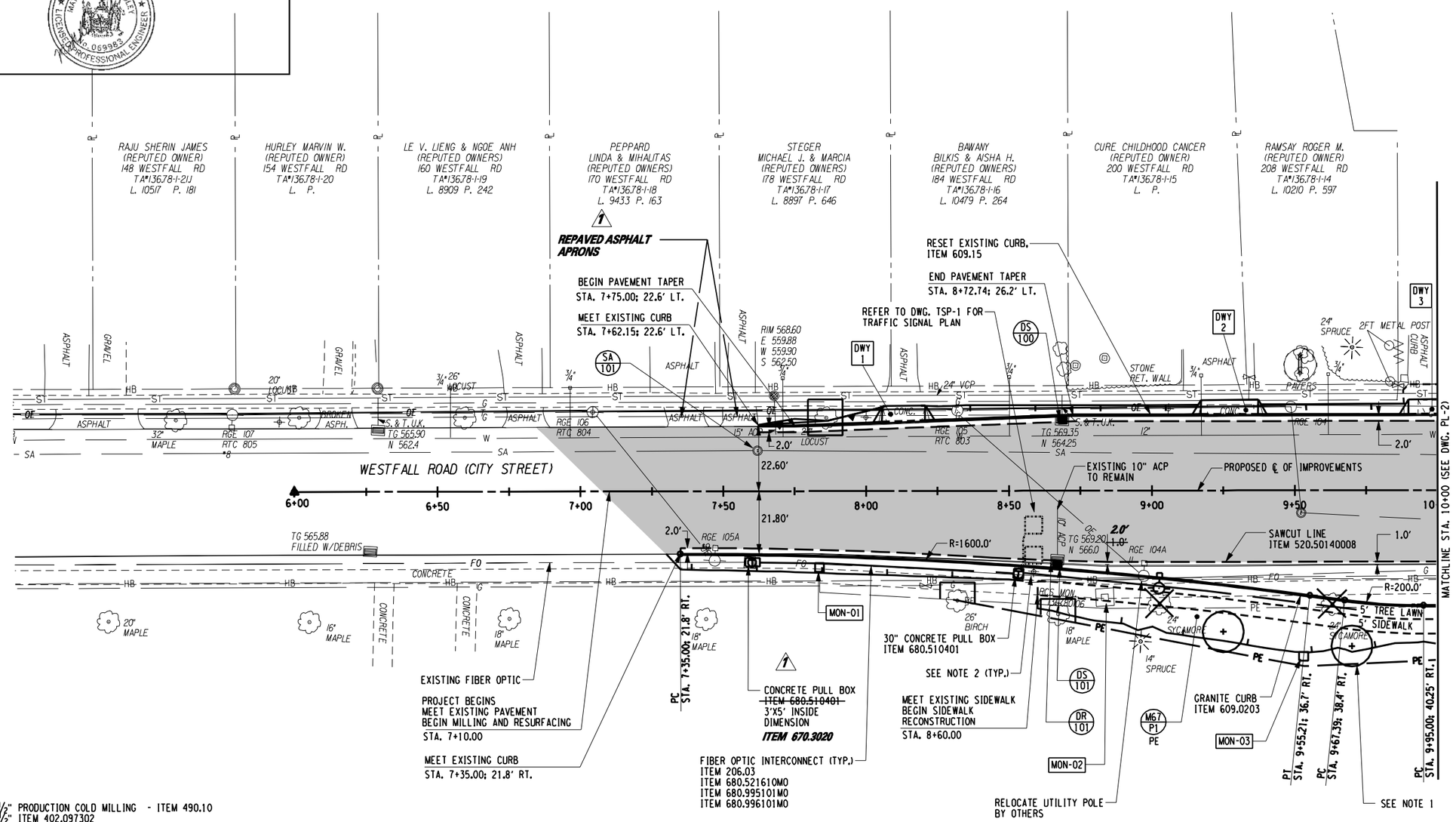

LEGEND

- 3½" PRODUCTION COLD MILLING - ITEM 490.10; 1½" ITEM 402.097302; 2" ITEM 402.197902
- 1½" MISCELLANEOUS COLD MILLING - ITEM 490.30; 1½" ITEM 402.097302
- TREE PROTECTION - ITEM 615.0402008 (REFER TO DETAILS ON DWG. MD-1, AND TREE PROTECTION TABLE ON DWG. MT-2)
- EXISTING TREES TO BE REMOVED (REFER TO TREE REMOVAL TABLE ON DWG. MT-2)
- MON-00 (REFER TO MONUMNET DISPOSITION TABLE ON DWG. MT-1)
- DS 100 PROPOSED DRAINAGE STRUCTURE (REFER TO DRAINAGE TABLES, DWG. DT-1 THROUGH DT-4)
- DR 100 DRAINAGE REMOVAL (REFER TO DRAINAGE REMOVAL TABLE, DWG. DT-4)
- EX 100 EXISTING DRAINAGE STRUCTURE (REFER TO DRAINAGE TABLES, DWGS. DT-1 THROUGH DT-4)
- SA 101 SANITARY SEWER ADJUSTMENT (REFER TO SANITARY MANHOLE TABLE ON DWG. UT-3)
- WM A1 PROPOSED WATER MAIN/SERVICE WORK (REFER TO WATER TABLES ON DWG. MT-3)

NOTES

1. REFER TO DWG. LS-1 FOR LANDSCAPING PLAN
2. REFER TO DWGS. SPM-1 THROUGH SPM-16 FOR SIGNING AND STRIPING PLANS.
3. REFER TO DWG. MD-7 FOR SIDEWALK DETAILS.
4. REFER TO DWG. DT-5 FOR DRAINAGE STRUCTURE AND PIPE REMOVAL DETAILS.

NO.	DATE	BY:	REVISION
1	08/17	JMW	PAVED ASPHALT APRONS

Barton & Loguidice, P.C.

DRAFTED BY: JMW/JJB
DESIGN BY: JMW

DEPARTMENT OF TRANSPORTATION
50 WEST MAIN STREET, SUITE 6100
ROCHESTER, NEW YORK 14614-1231

UNAUTHORIZED ALTERATION OR ADDITION TO THIS DRAWING IS A VIOLATION OF THE NEW YORK STATE EDUCATION LAW ARTICLE 145, SECTION 7209

PROJECT NAME: WESTFALL ROAD
LIMITS: E. HENRIETTA ROAD TO LAC-DE-VILLE BLVD
TOWN: BRIGHTON
CITY: ROCHESTER
CAPITAL PROJECT NO.: 4753.77
BRIDGE IDENTIFICATION NO.: N.A.

PLAN
STA. 6+00
TO STA. 10+00

SCALE: AS SHOWN
DATE ISSUED: 4/25/2014
DRAWING NO. PL-1
SHEET NO. 55 OF 112

mek
I:\MicroStation\Workspace\PLOT\NYSDOT\NYSDOT_SIZE_B.TBL
I:\MicroStation\Workspace\Plot\NYSDOT\NYSDOT_HPLJ5200_B.plt

FILE NAME = I:\Shared\1000\1066005\AS-BUILTS\1066005_pl_01.dgn
DATE = 4/25/2014
TIME = 10:27:30 AM

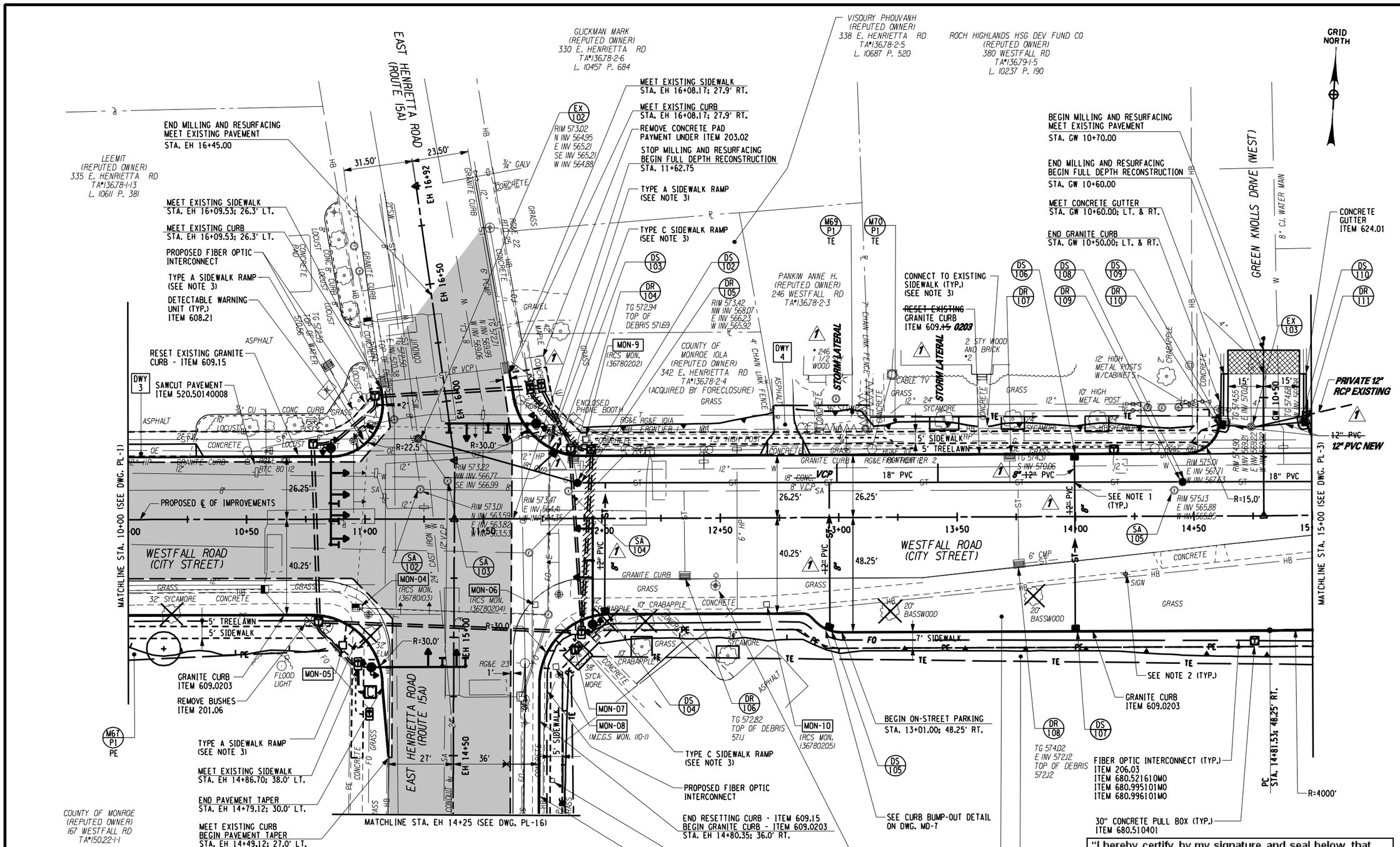

NOTES

1. CONNECT STORM SEWER LATERALS TO TRUNK WITH WYE CONNECTION (REFER TO DETAIL ON DWG. MD-6).
2. REFER TO DWGS. SPM-1 THROUGH SPM-16 FOR SIGNING AND STRIPING PLANS.
3. REFER TO DWG. MD-7 FOR SIDEWALK DETAILS.
4. REFER TO DWG. DT-5 FOR DRAINAGE STRUCTURE AND PIPE REMOVAL DETAILS.

LEGEND

REFER TO DWG. PL-1 FOR LEGEND

"I hereby certify by my signature and seal below, that I have prepared this record drawing which is, to the best of my knowledge and in my professional opinion, a true representation of the work as constructed on the Westfall Road Improvements Phase III, Project No. 1409."

STATE OF NEW YORK · MATTHEW J. SCANLEY · No. 069983 · LICENSED PROFESSIONAL ENGINEER

NO.	DATE	BY:	REVISION
1	08/07	JMW	REVISED LOCATION OF STORM DRAIN & PVC SIZES

Barton & Loguidice, P.C.

DRAFTED BY: JMW/JJB
DESIGN BY: JMW

DEPARTMENT OF TRANSPORTATION
50 WEST MAIN STREET, SUITE 6100
ROCHESTER, NEW YORK 14614-1231

UNAUTHORIZED ALTERATION OR ADDITION TO THIS DRAWING IS A VIOLATION OF THE NEW YORK STATE EDUCATION LAW ARTICLE 145, SECTION 7209

PROJECT NAME: WESTFALL ROAD
LIMITS: E. HENRIETTA ROAD TO LAC-DE-VILLE BLVD
TOWN: BRIGHTON
CITY: ROCHESTER
CAPITAL PROJECT NO.: 4753.77
BRIDGE IDENTIFICATION NO.: N.A.

PLAN
STA. 10+00
TO STA. 15+00

SCALE:
DATE ISSUED: 4/25/2014
DRAWING NO. PL-2
SHEET NO. 56 OF 112

mek
I:\MicroStation\Workspace\PLOT\NYSDOT\NYSDOT_SIZE_B.TBL
I:\MicroStation\Workspace\Plot\NYSDOT\NYSDOT_HPLJ5200_B.plt

FILE NAME = I:\Shared\1000\1066005\AS-BUILTS\1066005_pl_02.dgn
DATE = 4/25/2014
TIME = 10:27:57 AM

LEGEND

- 3½" PRODUCTION COLD MILLING - ITEM 490.10
  1½" ITEM 402.097302
  2 " ITEM 402.197902
- 1½" MISCELLANEOUS COLD MILLING - ITEM 490.30
  1½" ITEM 402.097302
- TREE PROTECTION - ITEM 615.0402008 (REFER TO DETAILS ON DWG. MD-1, AND TREE PROTECTION TABLE ON DWG. MT-2)
- EXISTING TREES TO BE REMOVED (REFER TO TREE REMOVAL TABLE ON DWG. MT-2)
- MON-00 (REFER TO MONUMNET DISPOSITION TABLE ON DWG. MT-1)
- DS 100 PROPOSED DRAINAGE STRUCTURE (REFER TO DRAINAGE TABLES, DWG. DT-1 THROUGH DT-4)
- DR 100 DRAINAGE REMOVAL (REFER TO DRAINAGE REMOVAL TABLE, DWG. DT-4)
- EX 100 EXISTING DRAINAGE STRUCTURE (REFER TO DRAINAGE TABLES, DWGS. DT-1 THROUGH DT-4)
- SA 101 SANITARY SEWER ADJUSTMENT (REFER TO SANITARY MANHOLE TABLE ON DWG. UT-3)
- WM A1 PROPOSED WATER MAIN/SERVICE WORK (REFER TO WATER TABLES ON DWG. MT-3)

NOTES

1. CONNECT STORM SEWER LATERALS TO TRUNK WITH WYE CONNECTION (REFER TO DETAIL ON DWG. MD-6).
2. REFER TO DWGS. SPM-1 THROUGH SPM-16 FOR SIGNING AND STRIPING PLANS.
3. REFER TO DWG. MD-7 FOR SIDEWALK DETAILS.
4. REFER TO DWG. DT-5 FOR DRAINAGE STRUCTURE AND PIPE REMOVAL DETAILS.

"I hereby certify by my signature and seal below, that I have prepared this record drawing which is, to the best of my knowledge and in my professional opinion, a true representation of the work as constructed on the Westfall Road Improvements Phase III, Project No. 1409."

STATE OF NEW YORK · MATTHEW J. SCHOLTZ · LICENSE NO. 069988 · PROFESSIONAL ENGINEER

GRID NORTH

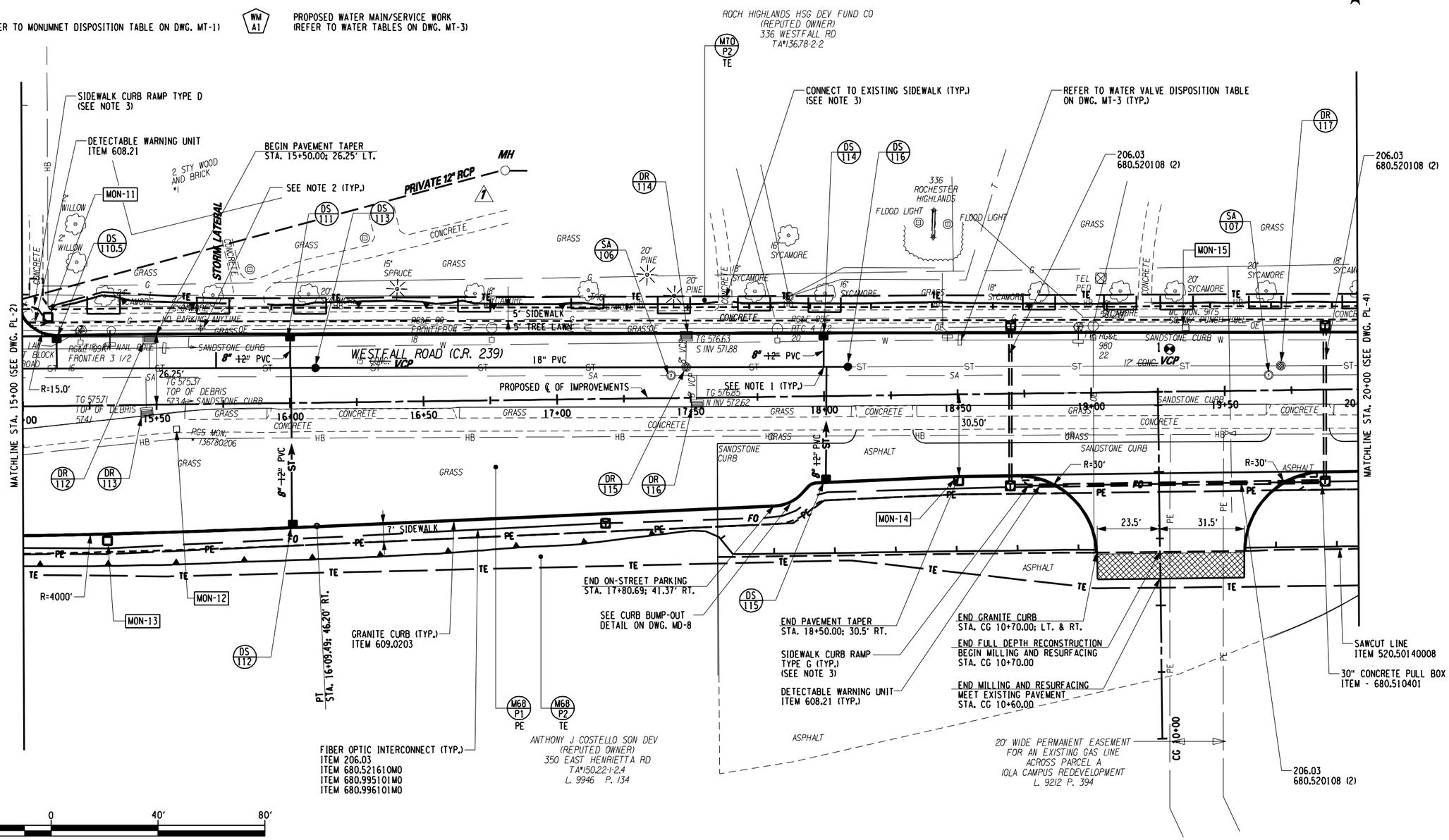

NO.	DATE	BY:	REVISION
1	10/1/19	JMW	SHOWED PRIVATE 12" & CHANGE PVC SIZES

Barton & Loguidice, P.C.

DRAFTED BY: JMW/JJB
DESIGN BY: JMW

DEPARTMENT OF TRANSPORTATION
50 WEST MAIN STREET, SUITE 6100
ROCHESTER, NEW YORK 14614-1231

UNAUTHORIZED ALTERATION OR ADDITION TO THIS DRAWING IS A VIOLATION OF THE NEW YORK STATE EDUCATION LAW ARTICLE 145, SECTION 7209

PROJECT NAME: WESTFALL ROAD
LIMITS: E. HENRIETTA ROAD TO LAC-DE-VILLE BLVD
TOWN: BROCHESTER
CITY: ROCHESTER
CAPITAL PROJECT NO.: 4753.77
BRIDGE IDENTIFICATION NO.: N.A.

PLAN
STA. 15+00
TO STA. 20+00

SCALE: AS SHOWN
DATE ISSUED: 4/25/2014
DRAWING NO. PL-3
SHEET NO. 57 OF 112

mek
I:\MicroStation\Workspace\PLOT\NYSDOT\NYSDOT_SIZE_B.TBL
I:\MicroStation\Workspace\Plot\NYSDOT\NYSDOT_HPLJ52000_B.plt

FILE NAME = I:\Shared\1000\1066005\AS-BUILTS\1066005_pl_03.dgn
DATE = 4/25/2014
TIME = 10:28:23 AM

END MILLING AND RESURFACING
MEET EXISTING PAVEMENT
STA. GE 10+70.00

BEGIN MILLING AND RESURFACING
END FULL DEPTH RECONSTRUCTION
STA. GE 10+60.00

MEET EXISTING SIDEWALK
STA. GE 10+40.00

MEETING EXISTING CONCRETE GUTTER
STA. GE 10+60.00; LT. & RT.

CONCRETE GUTTER
ITEM 624.01

END GRANITE CURB
STA. GE 10+41.50 LT. & RT.

SIDEWALK CURB RAMP TYPE D (TYP.)
(SEE NOTE 3)

DETECTABLE WARNING UNIT (TYP.)
ITEM 608.21

FILL EXISTING 12" RCP
WITH CLSM - ITEM 204.01

CONNECT TO EXISTING
SIDEWALK (SEE NOTE 3)

END PAVEMENT TAPER
STA. 21+50 19.50' LT.

REFER TO WATER VALVE
DISPOSITION TABLE
ON DWG. MT-3 (TYP.)

CONNECT TO
EXISTING SIDEWALK
(SEE NOTE 3)

ROCH HIGHLANDS HSG DEV FUND CO
(REPUTED OWNER)
336 WESTFALL RD
TA#136.78-2-2
L. P.

ROCH HIGHLANDS HSG DEV FUND CO
(REPUTED OWNER)
380 WESTFALL RD
TA#136.79-1-5
L. 10237 P. 190

STEPHEN R BURGART
(REPUTED OWNER)
400 WESTFALL RD
TA#136.79-1-1
L. 8570 P. 284

GRID NORTH

WESTFALL ROAD (CITY STREET)

PROPOSED ℄ OF IMPROVEMENTS

MATCHLINE STA. 20+00 (SEE DWG. PL-3)

MATCHLINE STA. 24+75 (SEE DWG. PL-5)

SEE NOTE 1 (TYP.)

SEE NOTE 2 (TYP.)

SAWCUT LINE
ITEM 520.50140008

BEGIN PAVEMENT TAPER
STA. 22+00; 30.50' RT.

GRANITE CURB (TYP.)
ITEM 609.0203

FIBER OPTIC INTERCONNECT (TYP.)
ITEM 206.03
ITEM 680.521610M0
ITEM 680.995101M0
ITEM 680.996101M0

30" CONCRETE PULL BOX (TYP.)
ITEM 680.510401

ANTHONY J COSTELLO SON DEV
(REPUTED OWNER)
350 EAST HENRIETTA RD
TA#150.22-1-2.4
L. 9946 P. 134

COUNTY OF MONROE
(REPUTED OWNER)
401 WESTFALL RD
TA#150.23-1-1
L. P.

LEGEND

- 3½" PRODUCTION COLD MILLING - ITEM 490.10
  1½" ITEM 402.097302
  2 " ITEM 402.197902
- 1½" MISCELLANEOUS COLD MILLING - ITEM 490.30
  1½" ITEM 402.097302
- TREE PROTECTION - ITEM 615.0402008
  (REFER TO DETAILS ON DWG. MD-1, AND
  TREE PROTECTION TABLE ON DWG. MT-2)
- EXISTING TREES TO BE REMOVED
  (REFER TO TREE REMOVAL TABLE ON DWG. MT-2)
- MON-00 (REFER TO MONUMNET DISPOSITION TABLE ON DWG. MT-1)
- DS 100 PROPOSED DRAINAGE STRUCTURE
  (REFER TO DRAINAGE TABLES, DWG. DT-1 THROUGH DT-4)
- DR 100 DRAINAGE REMOVAL
  (REFER TO DRAINAGE REMOVAL TABLE, DWG. DT-4)
- EX 100 EXISTING DRAINAGE STRUCTURE
  (REFER TO DRAINAGE TABLES, DWGS. DT-1 THROUGH DT-4)
- SA 101 SANITARY SEWER ADJUSTMENT
  (REFER TO SANITARY MANHOLE TABLE ON DWG. UT-3)
- WM A1 PROPOSED WATER MAIN/SERVICE WORK
  (REFER TO WATER TABLES ON DWG. MT-3)

NOTES

1. CONNECT STORM SEWER LATERALS TO TRUNK WITH WYE CONNECTION (REFER TO DETAIL ON DWG. MD-6).
2. REFER TO DWGS. SPM-1 THROUGH SPM-16 FOR SIGNING AND STRIPING PLANS.
3. REFER TO DWG. MD-7 FOR SIDEWALK DETAILS.
4. REFER TO DWG. DT-5 FOR DRAINAGE STRUCTURE AND PIPE REMOVAL DETAILS.

"I hereby certify by my signature and seal below, that I have prepared this record drawing which is, to the best of my knowledge and in my professional opinion, a true representation of the work as constructed on the Westfall Road Improvements Phase III, Project No. 1409."

STATE OF NEW YORK · MATTHEW J. SCHOLLER · LICENSED PROFESSIONAL ENGINEER · No. 069983

40' 0 40' 80'

NO AS-BUILTS REVISIONS

NO.	DATE	BY:	REVISION

Barton & Loguidice, P.C.

DRAFTED BY: JMW/JJB
DESIGN BY: JMW

DEPARTMENT OF TRANSPORTATION
50 WEST MAIN STREET, SUITE 6100
ROCHESTER, NEW YORK 14614-1231

UNAUTHORIZED ALTERATION OR ADDITION TO THIS DRAWING IS A VIOLATION OF THE NEW YORK STATE EDUCATION LAW ARTICLE 145, SECTION 7209

PROJECT NAME: WESTFALL ROAD
LIMITS: E. HENRIETTA ROAD TO LAC-DE-VILLE BLVD
TOWN: BRIGHTON
CITY: ROCHESTER
CAPITAL PROJECT NO.: 4753.77
BRIDGE IDENTIFICATION NO.: N.A.

PLAN
STA. 20+00
TO STA. 24+75

SCALE: AS SHOWN
DATE ISSUED: 4/25/2014
DRAWING NO. PL-4
SHEET NO. 58 OF 112

FILE NAME = I:\Shared\1000\1066005\AS-BUILTS\1066005_pl_04.dgn
DATE = 4/25/2014
TIME = 10:28:47 AM

mek
I:\MicroStation\Workspace\PLOT\NYSDOT\NYSDOT_SIZE_B.TBL
I:\MicroStation\Workspace\Plot\NYSDOT\NYSDOT_HPLJ5200_B.plt

LEGEND

- 3½" PRODUCTION COLD MILLING - ITEM 490.10
  1½" ITEM 402.097302
  2 " ITEM 402.197902
- 1½" MISCELLANEOUS COLD MILLING - ITEM 490.30
  1½" ITEM 402.097302
- TREE PROTECTION - ITEM 615.0402008
  (REFER TO DETAILS ON DWG. MD-1, AND TREE PROTECTION TABLE ON DWG. MT-2)
- EXISTING TREES TO BE REMOVED
  (REFER TO TREE REMOVAL TABLE ON DWG. MT-2)
- MON-00 (REFER TO MONUMNET DISPOSITION TABLE ON DWG. MT-1)
- DS 100 PROPOSED DRAINAGE STRUCTURE
  (REFER TO DRAINAGE TABLES, DWG. DT-1 THROUGH DT-4)
- DR 100 DRAINAGE REMOVAL
  (REFER TO DRAINAGE REMOVAL TABLE, DWG. DT-4)
- EX 100 EXISTING DRAINAGE STRUCTURE
  (REFER TO DRAINAGE TABLES, DWGS. DT-1 THROUGH DT-4)
- SA 101 SANITARY SEWER ADJUSTMENT
  (REFER TO SANITARY MANHOLE TABLE ON DWG. UT-3)
- WM A1 PROPOSED WATER MAIN/SERVICE WORK
  (REFER TO WATER TABLES ON DWG. MT-3)

NOTES

1. CONNECT STORM SEWER LATERALS TO TRUNK WITH WYE CONNECTION (REFER TO DETAIL ON DWG. MD-6).
2. REFER TO DWGS. SPM-1 THROUGH SPM-16 FOR SIGNING AND STRIPING PLANS.
3. REFER TO DWG. MD-7 FOR SIDEWALK DETAILS.
4. REFER TO DWG. DT-5 FOR DRAINAGE STRUCTURE AND PIPE REMOVAL DETAILS.
5. CONNECT EXISTING STORM LATERALS TO NEW 18" PVC TRUNK AT APPROXIMATE STA. 26+28 LT. AND STA. 28+53 LT. OR AOBE. PAYMENT UNDER ITEM C604.05.

1 - 10' SIDEWALK EASEMENT TO THE TOWN OF BRIGHTON
2 - 100' CONSERVATION EASEMENT TO THE TOWN OF BRIGHTON
3 - 45' EASEMENT TO ROCHESTER GAS AND ELECTRIC CORPORATION OF ROCHESTER
4 - EXISTING WATERMAIN EASEMENT TO MCWA
5 - 30' PERMANANT EASEMENT TO ROCHESTER PURE WATERS DISTRICT

GRID NORTH

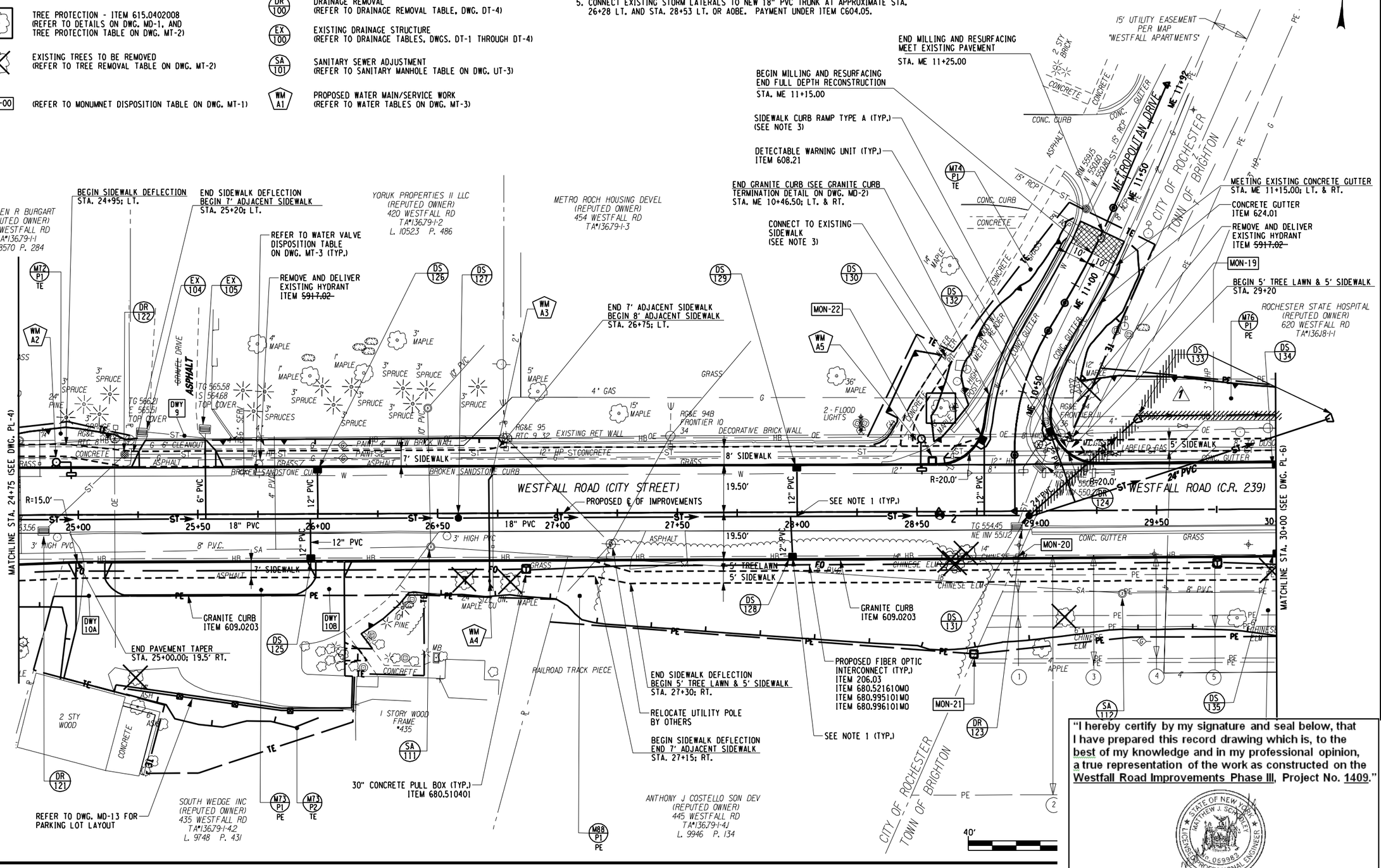

"I hereby certify by my signature and seal below, that I have prepared this record drawing which is, to the best of my knowledge and in my professional opinion, a true representation of the work as constructed on the Westfall Road Improvements Phase III, Project No. 1409."

STATE OF NEW YORK · MATTHEW J. SCHOFIELD · LICENSED PROFESSIONAL ENGINEER · LIC. NO. 069983

NO.	DATE	BY:	REVISION
1	10/17	JMW	REVISED LOCATION OF STORM DRAIN

Barton & Loguidice, P.C.

DRAFTED BY: JMW/VJJB
DESIGN BY: JMW

DEPARTMENT OF TRANSPORTATION
50 WEST MAIN STREET, SUITE 6100
ROCHESTER, NEW YORK 14614-1231

UNAUTHORIZED ALTERATION OR ADDITION TO THIS DRAWING IS A VIOLATION OF THE NEW YORK STATE EDUCATION LAW ARTICLE 145, SECTION 7209

PROJECT NAME: WESTFALL ROAD
LIMITS: E. HENRIETTA ROAD TO LAC-DE-VILLE BLVD
TOWN: BRIGHTON
CITY: ROCHESTER
CAPITAL PROJECT NO.: 4753.77
BRIDGE IDENTIFICATION NO.: N.A.

PLAN
STA. 24+75
TO STA. 30+00

SCALE: AS SHOWN
DATE ISSUED: 4/25/2014
DRAWING NO. PL-5
SHEET NO. 59 OF 112

mek
I:\MicroStation\Workspace\PLOT\NYSDOT\NYSDOT_SIZE_B.TBL
I:\MicroStation\Workspace\Plot\NYSDOT\NYSDOT_HPLJ5200_B.plt

FILE NAME = I:\Shared\1000\1066005\AS-BUILTS\1066005_pl_05.dgn
DATE = 4/25/2014
TIME = 10:29:11 AM

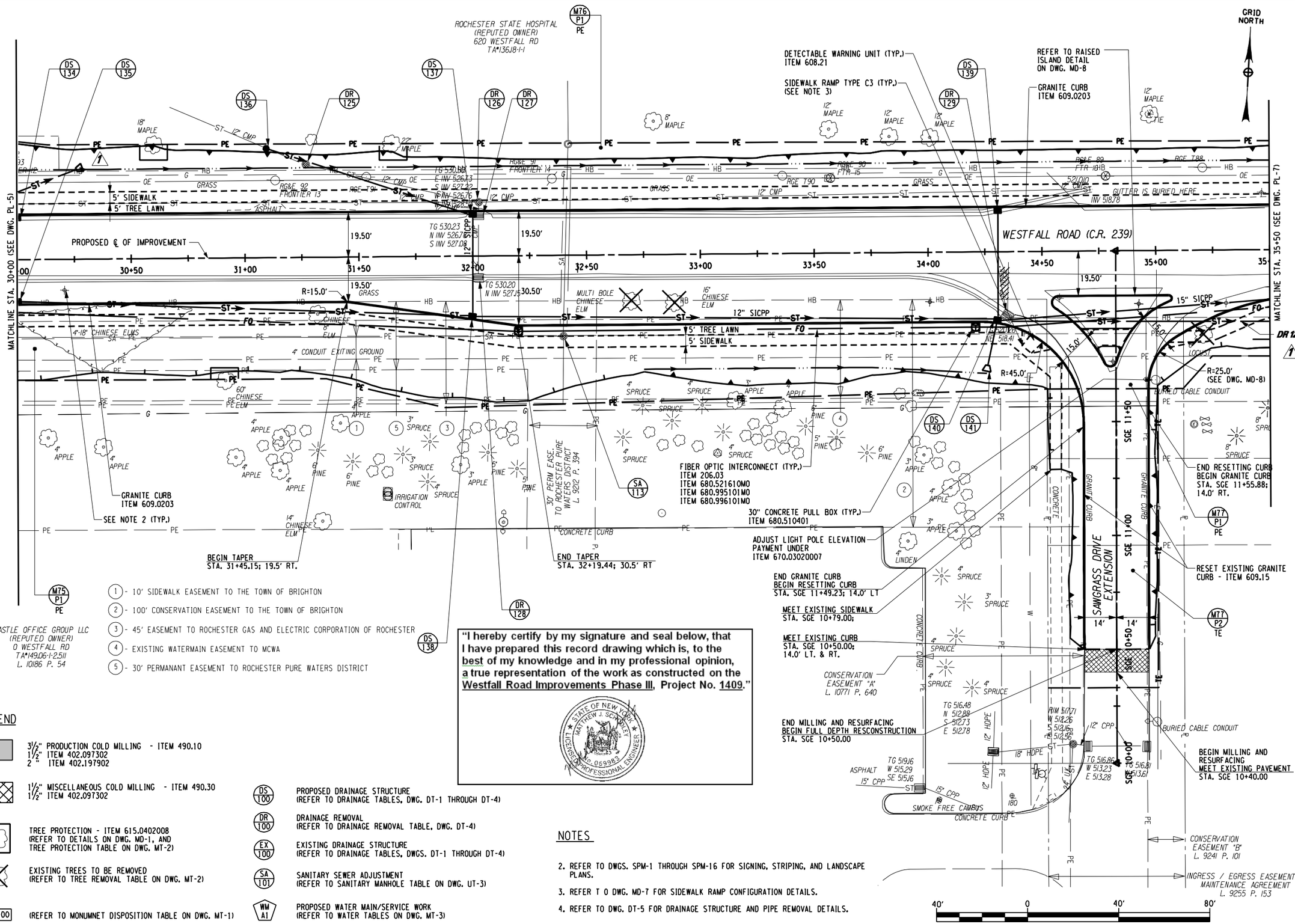

"I hereby certify by my signature and seal below, that I have prepared this record drawing which is, to the best of my knowledge and in my professional opinion, a true representation of the work as constructed on the Westfall Road Improvements Phase III, Project No. 1409."

STATE OF NEW YORK · MATTHEW J. SCANLEN · No. 069982 · LICENSED PROFESSIONAL ENGINEER

LEGEND

- 3½" PRODUCTION COLD MILLING - ITEM 490.10; 1½" ITEM 402.097302; 2" ITEM 402.197902
- 1½" MISCELLANEOUS COLD MILLING - ITEM 490.30; 1½" ITEM 402.097302
- TREE PROTECTION - ITEM 615.0402008 (REFER TO DETAILS ON DWG. MD-1, AND TREE PROTECTION TABLE ON DWG. MT-2)
- EXISTING TREES TO BE REMOVED (REFER TO TREE REMOVAL TABLE ON DWG. MT-2)
- MON-00 (REFER TO MONUMNET DISPOSITION TABLE ON DWG. MT-1)
- DS 100 — PROPOSED DRAINAGE STRUCTURE (REFER TO DRAINAGE TABLES, DWG. DT-1 THROUGH DT-4)
- DR 100 — DRAINAGE REMOVAL (REFER TO DRAINAGE REMOVAL TABLE, DWG. DT-4)
- EX 100 — EXISTING DRAINAGE STRUCTURE (REFER TO DRAINAGE TABLES, DWGS. DT-1 THROUGH DT-4)
- SA 101 — SANITARY SEWER ADJUSTMENT (REFER TO SANITARY MANHOLE TABLE ON DWG. UT-3)
- WM A1 — PROPOSED WATER MAIN/SERVICE WORK (REFER TO WATER TABLES ON DWG. MT-3)

NOTES

2. REFER TO DWGS. SPM-1 THROUGH SPM-16 FOR SIGNING, STRIPING, AND LANDSCAPE PLANS.
3. REFER T O DWG. MD-7 FOR SIDEWALK RAMP CONFIGURATION DETAILS.
4. REFER TO DWG. DT-5 FOR DRAINAGE STRUCTURE AND PIPE REMOVAL DETAILS.

NO.	DATE	BY:	REVISION
1	10/17	JMW	REVISED LOCATION OF STORM DRAIN & LOCATED DR 129

Barton & Loguidice, P.C.

DRAFTED BY: JMW/JJB
DESIGN BY: JMW

DEPARTMENT OF TRANSPORTATION
50 WEST MAIN STREET, SUITE 6100
ROCHESTER, NEW YORK 14614-1231

UNAUTHORIZED ALTERATION OR ADDITION TO THIS DRAWING IS A VIOLATION OF THE NEW YORK STATE EDUCATION LAW ARTICLE 145, SECTION 7209

PROJECT NAME: WESTFALL ROAD
LIMITS: E. HENRIETTA ROAD TO LAC-DE-VILLE BLVD
TOWN: BRIGHTON
CITY: ROCHESTER
CAPITAL PROJECT NO.: 4753.77
BRIDGE IDENTIFICATION NO.: N.A.

PLAN STA. 30+00 TO STA. 35+50

SCALE: AS SHOWN
DATE ISSUED: 4/25/2014
DRAWING NO. PL-6
SHEET NO. 60 OF 112

mek
I:\MicroStation\Workspace\PLOT\NYSDOT\NYSDOT_SIZE_B.TBL
I:\MicroStation\Workspace\Plot\NYSDOT\NYSDOT_HPLJ5200_B.plt

FILE NAME = I:\Shared\1000\1066005\AS-BUILTS\1066005_pl_06.dgn
DATE = 4/25/2014
TIME = 10:31:38 AM

"I hereby certify by my signature and seal below, that I have prepared this record drawing which is, to the best of my knowledge and in my professional opinion, a true representation of the work as constructed on the Westfall Road Improvements Phase III, Project No. 1409."

STATE OF NEW YORK · MATTHEW J. SCHOLTES · No. 069983 · LICENSED PROFESSIONAL ENGINEER

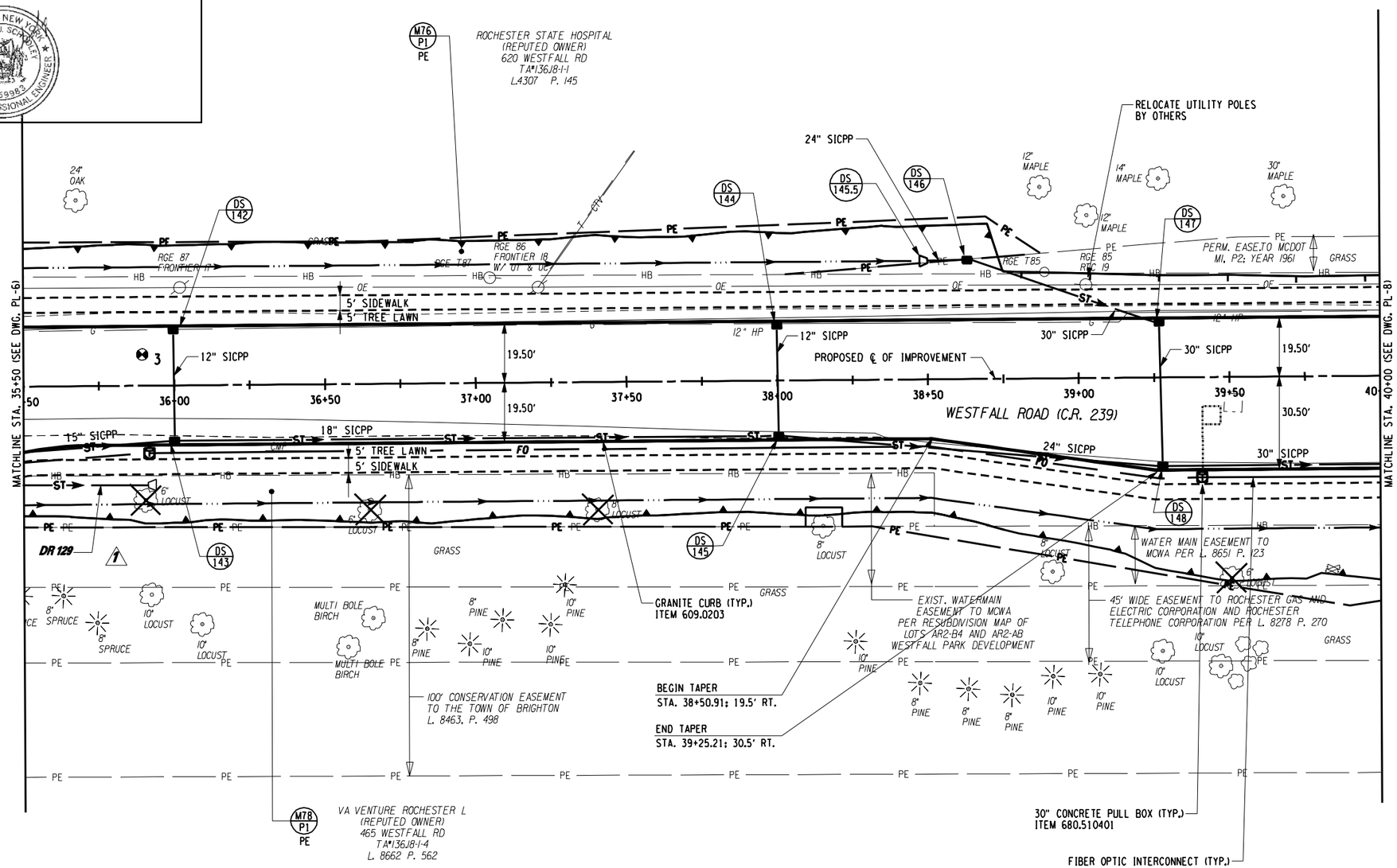

LEGEND

- 3½" PRODUCTION COLD MILLING - ITEM 490.10
  1½" ITEM 402.097302
  2 " ITEM 402.197902
- 1½" MISCELLANEOUS COLD MILLING - ITEM 490.30
  1½" ITEM 402.097302
- TREE PROTECTION - ITEM 615.0402008 (REFER TO DETAILS ON DWG. MD-1, AND TREE PROTECTION TABLE ON DWG. MT-2)
- EXISTING TREES TO BE REMOVED (REFER TO TREE REMOVAL TABLE ON DWG. MT-2)
- MON-00 (REFER TO MONUMNET DISPOSITION TABLE ON DWG. MT-1)
- DS 100 PROPOSED DRAINAGE STRUCTURE (REFER TO DRAINAGE TABLES, DWG. DT-1 THROUGH DT-4)
- DR 100 DRAINAGE REMOVAL (REFER TO DRAINAGE REMOVAL TABLE, DWG. DT-4)
- EX 100 EXISTING DRAINAGE STRUCTURE (REFER TO DRAINAGE TABLES, DWGS. DT-1 THROUGH DT-4)
- SA 101 SANITARY SEWER ADJUSTMENT (REFER TO SANITARY MANHOLE TABLE ON DWG. UT-3)
- WM A1 PROPOSED WATER MAIN/SERVICE WORK (REFER TO WATER TABLES ON DWG. MT-3)

NOTES

2. REFER TO DWGS. SPM-1 THROUGH SPM-16 FOR SIGNING AND STRIPING PLANS.
3. REFER TO DWG. MD-7 FOR SIDEWALK DETAILS.
4. REFER TO DWG. DT-5 FOR DRAINAGE STRUCTURE AND PIPE REMOVAL DETAILS.

40' 0 40' 80'

NO.	DATE	BY:	REVISION
1	10/13	JMW	LOCATED DR 129

Barton & Loguidice, P.C.

DRAFTED BY: JMW/JJB
DESIGN BY: JMW

DEPARTMENT OF TRANSPORTATION
50 WEST MAIN STREET, SUITE 6100
ROCHESTER, NEW YORK 14614-1231

UNAUTHORIZED ALTERATION OR ADDITION TO THIS DRAWING IS A VIOLATION OF THE NEW YORK STATE EDUCATION LAW ARTICLE 145, SECTION 7209

PROJECT NAME: WESTFALL ROAD
LIMITS: E. HENRIETTA ROAD TO LAC-DE-VILLE BLVD
TOWN: BRIGHTON
CITY: ROCHESTER
CAPITAL PROJECT NO.: 4753.77
BRIDGE IDENTIFICATION NO.: N.A.

PLAN
STA. 35+50
TO STA. 40+00

SCALE: AS SHOWN
DATE ISSUED: 4/25/2014
DRAWING NO. PL-7
SHEET NO. 61 OF 112

mek
I:\MicroStation\Workspace\PLOT\NYSDOT\NYSDOT_SIZE_B.TBL
I:\MicroStation\Workspace\Plot\NYSDOT\NYSDOT_HPLJ5200_B.plt

FILE NAME = I:\Shared\1000\1066005\AS-BUILTS\1066005_pl_07.dgn
DATE = 4/25/2014
TIME = 10:32:06 AM

NOTES

2. REFER TO DWGS. SPM-1 THROUGH SPM-16 FOR SIGNING AND STRIPING PLANS.
3. REFER TO DWG. MD-7 FOR SIDEWALK DETAILS.
4. REFER TO DWG. DT-5 FOR DRAINAGE STRUCTURE AND PIPE REMOVAL DETAILS.

"I hereby certify by my signature and seal below, that I have prepared this record drawing which is, to the best of my knowledge and in my professional opinion, a true representation of the work as constructed on the Westfall Road Improvements Phase III, Project No. 1409."

STATE OF NEW YORK · MATTHEW J. SCHOLEY · LICENSED PROFESSIONAL ENGINEER · NO. 069983

LEGEND

- 3½" PRODUCTION COLD MILLING - ITEM 490.10
  1½" ITEM 402.097302
  2 " ITEM 402.197902
- 1½" MISCELLANEOUS COLD MILLING - ITEM 490.30
  1½" ITEM 402.097302
- TREE PROTECTION - ITEM 615.0402008 (REFER TO DETAILS ON DWG. MD-1, AND TREE PROTECTION TABLE ON DWG. MT-2)
- EXISTING TREES TO BE REMOVED (REFER TO TREE REMOVAL TABLE ON DWG. MT-2)
- MON-00 (REFER TO MONUMNET DISPOSITION TABLE ON DWG. MT-1)
- DS 100 PROPOSED DRAINAGE STRUCTURE (REFER TO DRAINAGE TABLES, DWG. DT-1 THROUGH DT-4)
- DR 100 DRAINAGE REMOVAL (REFER TO DRAINAGE REMOVAL TABLE, DWG. DT-4)
- EX 100 EXISTING DRAINAGE STRUCTURE (REFER TO DRAINAGE TABLES, DWGS. DT-1 THROUGH DT-4)
- SA 101 SANITARY SEWER ADJUSTMENT (REFER TO SANITARY MANHOLE TABLE ON DWG. UT-3)
- WM A1 PROPOSED WATER MAIN/SERVICE WORK (REFER TO WATER TABLES ON DWG. MT-3)

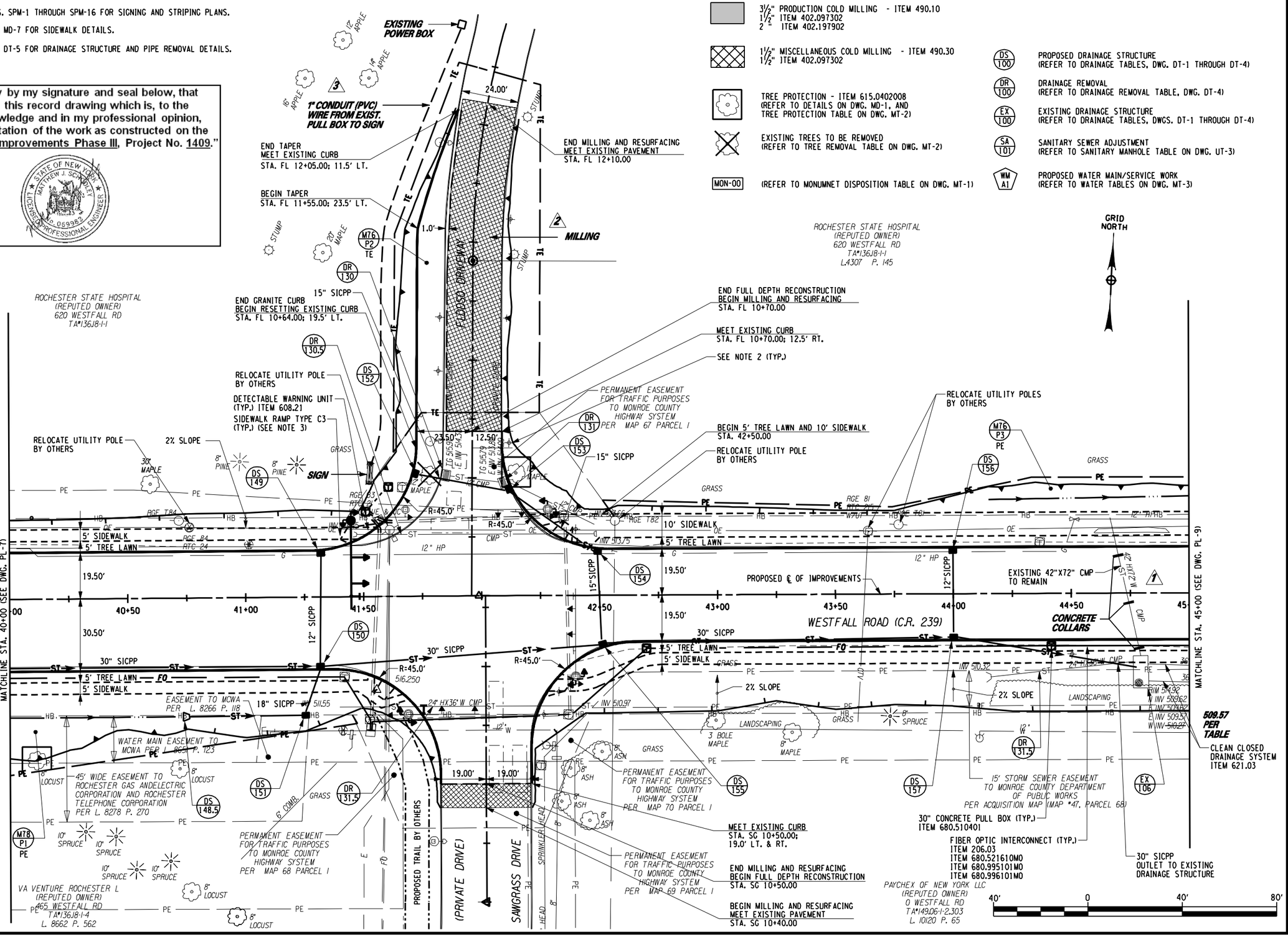

NO.	DATE	BY:	REVISION
1	08/12	JMW	CONCRETE COLLARS
2	07/13	JMW	MILLING FOR DRIVEWAY #439
3	02/26/14	JMW	1" CONDUIT (PVC) WIRE

Barton & Loguidice, P.C.

DRAFTED BY: JMW/JJB
DESIGN BY: JMW

DEPARTMENT OF TRANSPORTATION
50 WEST MAIN STREET, SUITE 6100
ROCHESTER, NEW YORK 14614-1231

UNAUTHORIZED ALTERATION OR ADDITION TO THIS DRAWING IS A VIOLATION OF THE NEW YORK STATE EDUCATION LAW ARTICLE 145, SECTION 7209

PROJECT NAME: WESTFALL ROAD
LIMITS: E. HENRIETTA ROAD TO LAC-DE-VILLE BLVD
TOWN: BRIGHTON
CITY: ROCHESTER
CAPITAL PROJECT NO.: 4753.77
BRIDGE IDENTIFICATION NO.: N.A.

PLAN
STA. 40+00
TO STA. 45+00

SCALE: AS SHOWN
DATE ISSUED: 4/25/2014
DRAWING NO. PL-8
SHEET NO. 62 OF 112

mek
I:\MicroStation\Workspace\PLOT\NYSDOT\NYSDOT_SIZE_B.TBL
I:\MicroStation\Workspace\Plot\NYSDOT\NYSDOT_HPLJ5200_B.plt

FILE NAME = I:\Shared\1000\1066005\AS-BUILTS\1066005_pl_08.dgn
DATE = 4/25/2014
TIME = 10:32:30 AM

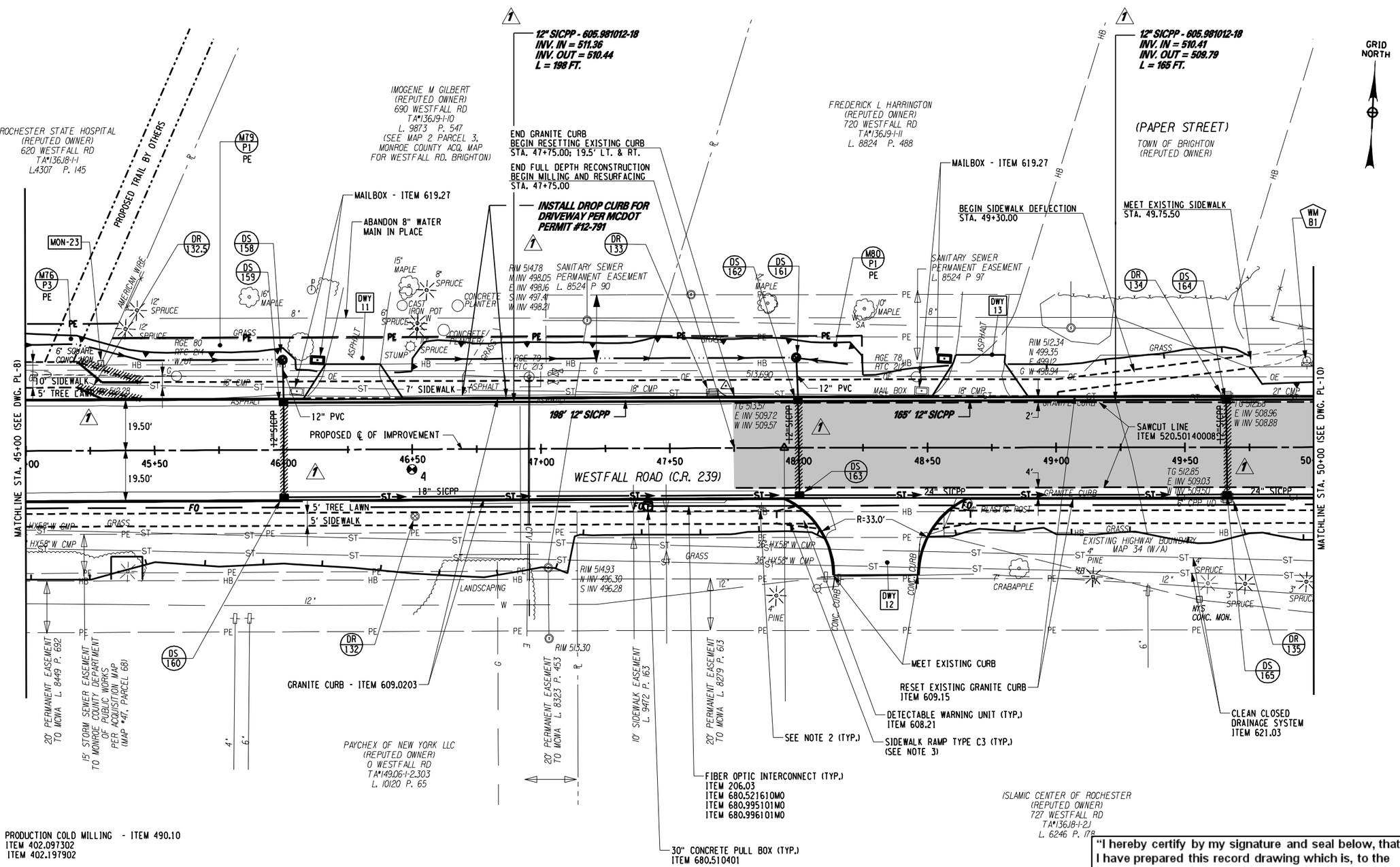

LEGEND

- 3½" PRODUCTION COLD MILLING - ITEM 490.10
  1½" ITEM 402.097302
  2 " ITEM 402.197902
- 1½" MISCELLANEOUS COLD MILLING - ITEM 490.30
  1½" ITEM 402.097302
- TREE PROTECTION - ITEM 615.0402008
  (REFER TO DETAILS ON DWG. MD-1, AND TREE PROTECTION TABLE ON DWG. MT-2)
- EXISTING TREES TO BE REMOVED
  (REFER TO TREE REMOVAL TABLE ON DWG. MT-2)
- MON-00 (REFER TO MONUMNET DISPOSITION TABLE ON DWG. MT-1)
- DS 100 PROPOSED DRAINAGE STRUCTURE (REFER TO DRAINAGE TABLES, DWG. DT-1 THROUGH DT-4)
- DR 100 DRAINAGE REMOVAL (REFER TO DRAINAGE REMOVAL TABLE, DWG. DT-4)
- EX 100 EXISTING DRAINAGE STRUCTURE (REFER TO DRAINAGE TABLES, DWGS. DT-1 THROUGH DT-4)
- SA 101 SANITARY SEWER ADJUSTMENT (REFER TO SANITARY MANHOLE TABLE ON DWG. UT-3)
- WM A1 PROPOSED WATER MAIN/SERVICE WORK (REFER TO WATER TABLES ON DWG. MT-3)

NOTES

2. REFER TO DWGS. SPM-1 THROUGH SPM-16 FOR SIGNING AND STRIPING PLANS.
3. REFER TO DWG. MD-7 FOR SIDEWALK DETAILS.
4. REFER TO DWG. DT-5 FOR DRAINAGE STRUCTURE AND PIPE REMOVAL DETAILS.

"I hereby certify by my signature and seal below, that I have prepared this record drawing which is, to the best of my knowledge and in my professional opinion, a true representation of the work as constructed on the Westfall Road Improvements Phase III, Project No. 1409."

STATE OF NEW YORK · MATTHEW J. SCHOLL · LICENSED PROFESSIONAL ENGINEER · No. 069983

40 0 40 80

NO.	DATE	BY:	REVISION
1	06/10	JMW	REVISED LOCATION OF STORM DRAIN & SIDEWALK

Barton & Loguidice, P.C.

DRAFTED BY: JMW/JJB
DESIGN BY: JMW

DEPARTMENT OF TRANSPORTATION
50 WEST MAIN STREET, SUITE 6100
ROCHESTER, NEW YORK 14614-1231

UNAUTHORIZED ALTERATION OR ADDITION TO THIS DRAWING IS A VIOLATION OF THE NEW YORK STATE EDUCATION LAW ARTICLE 145, SECTION 7209

PROJECT NAME: WESTFALL ROAD
LIMITS: E. HENRIETTA ROAD TO LAC-DE-VILLE BLVD
TOWN: BRIGHTON
CITY: ROCHESTER
CAPITAL PROJECT NO.: 4753.77
BRIDGE IDENTIFICATION NO.: N.A.

PLAN
STA. 45+00
TO STA. 50+00

SCALE: AS SHOWN
DATE ISSUED: 4/25/2014
DRAWING NO. PL-9
SHEET NO. 63 OF 112

mek
I:\MicroStation\Workspace\PLOT\NYSDOT\NYSDOT_SIZE_B.TBL
I:\MicroStation\Workspace\Plot\NYSDOT\NYSDOT_HPLJ5200_B.plt

FILE NAME = L:\Shared\1000\1066005\AS-BUILTS\1066005_PL_09.dgn
DATE = 4/25/2014
TIME = 10:33:05 AM

"I hereby certify by my signature and seal below, that I have prepared this record drawing which is, to the best of my knowledge and in my professional opinion, a true representation of the work as constructed on the Westfall Road Improvements Phase III, Project No. 1409."

STATE OF NEW YORK · MATTHEW J. SCHOLEY · LICENSED PROFESSIONAL ENGINEER · No. 069983

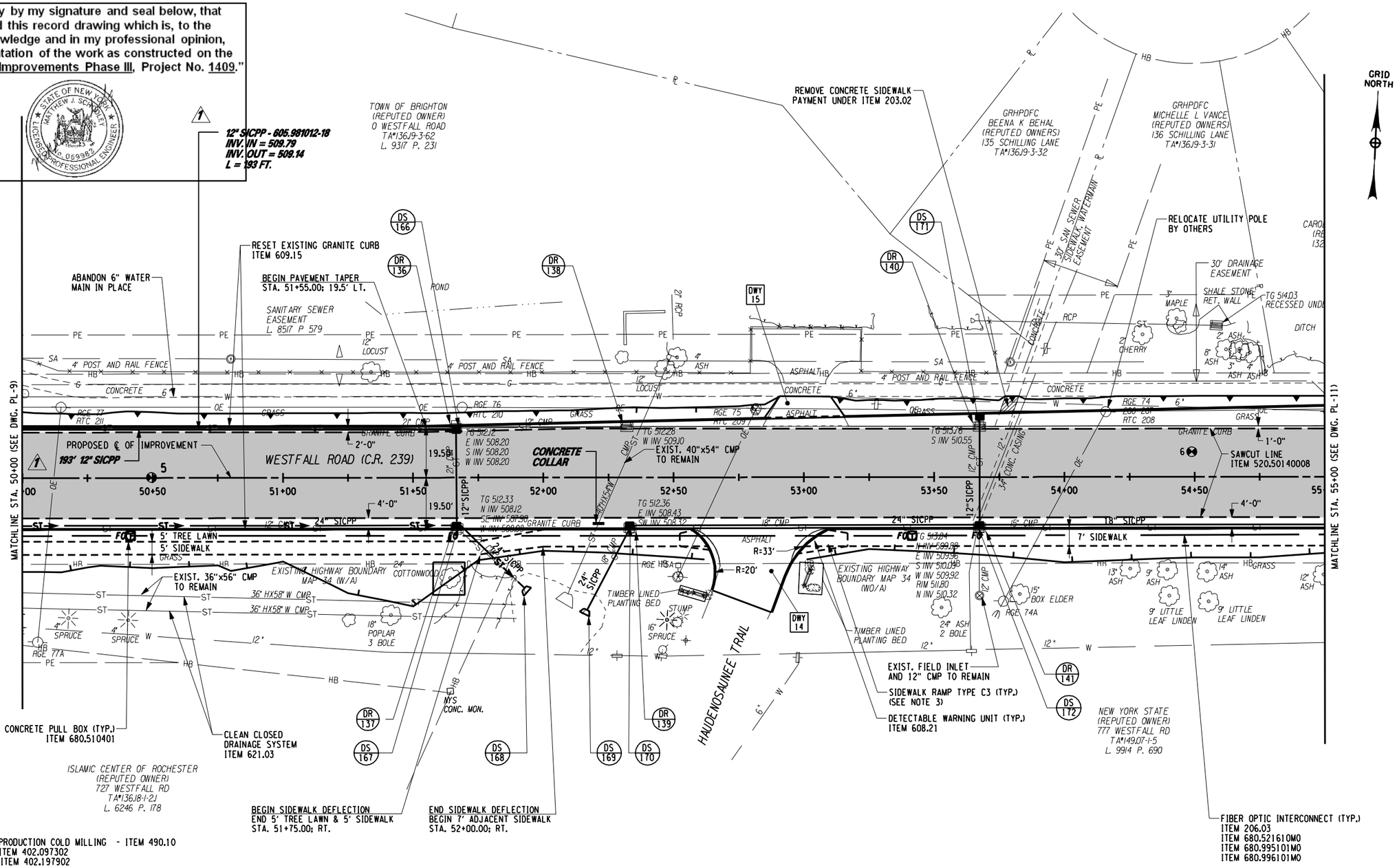

LEGEND

- 3½" PRODUCTION COLD MILLING - ITEM 490.10; 1½" ITEM 402.097302; 2" ITEM 402.197902
- 1½" MISCELLANEOUS COLD MILLING - ITEM 490.30; 1½" ITEM 402.097302
- TREE PROTECTION - ITEM 615.0402008 (REFER TO DETAILS ON DWG. MD-1, AND TREE PROTECTION TABLE ON DWG. MT-2)
- EXISTING TREES TO BE REMOVED (REFER TO TREE REMOVAL TABLE ON DWG. MT-2)
- MON-00 (REFER TO MONUMNET DISPOSITION TABLE ON DWG. MT-1)
- DS 100 PROPOSED DRAINAGE STRUCTURE (REFER TO DRAINAGE TABLES, DWG. DT-1 THROUGH DT-4)
- DR 100 DRAINAGE REMOVAL (REFER TO DRAINAGE REMOVAL TABLE, DWG. DT-4)
- EX 100 EXISTING DRAINAGE STRUCTURE (REFER TO DRAINAGE TABLES, DWGS. DT-1 THROUGH DT-4)
- SA 101 SANITARY SEWER ADJUSTMENT (REFER TO SANITARY MANHOLE TABLE ON DWG. UT-3)
- WM A1 PROPOSED WATER MAIN/SERVICE WORK (REFER TO WATER TABLES ON DWG. MT-3)

NOTES

2. REFER TO DWGS. SPM-1 THROUGH SPM-16 FOR SIGNING AND STRIPING PLANS.
3. REFER TO DWG. MD-7 FOR SIDEWALK DETAILS.
4. REFER TO DWG. DT-5 FOR DRAINAGE STRUCTURE AND PIPE REMOVAL DETAILS.

40' 0 40' 80'

NO.	DATE	BY:	REVISION
1	08/13	LMW	REVISED LOCATION OF STORM DRAIN

Barton & Loguidice, P.C.

DRAFTED BY: JMW/JJB
DESIGN BY: JMW

DEPARTMENT OF TRANSPORTATION
50 WEST MAIN STREET, SUITE 6100
ROCHESTER, NEW YORK 14614-1231

UNAUTHORIZED ALTERATION OR ADDITION TO THIS DRAWING IS A VIOLATION OF THE NEW YORK STATE EDUCATION LAW ARTICLE 145, SECTION 7209

PROJECT NAME: WESTFALL ROAD
LIMITS: E. HENRIETTA ROAD TO LAC-DE-VILLE BLVD
TOWN: BRIGHTON
CITY: ROCHESTER
CAPITAL PROJECT NO.: 4753.77
BRIDGE IDENTIFICATION NO.: N.A.

PLAN
STA. 50+00
TO STA. 55+00

SCALE: AS SHOWN
DATE ISSUED: 4/25/2014
DRAWING NO. PL-10
SHEET NO. 64 OF 112

mek
I:\MicroStation\Workspace\PLOT\NYSDOT\NYSDOT_SIZE_B.TBL
I:\MicroStation\Workspace\Plot\NYSDOT\NYSDOT_HPLJ5200_B.plt
FILE NAME = I:\Shared\1000\1066005\AS-BUILTS\10660005-pl.10.dgn
DATE = 4/25/2014
TIME = 10:33:29 AM

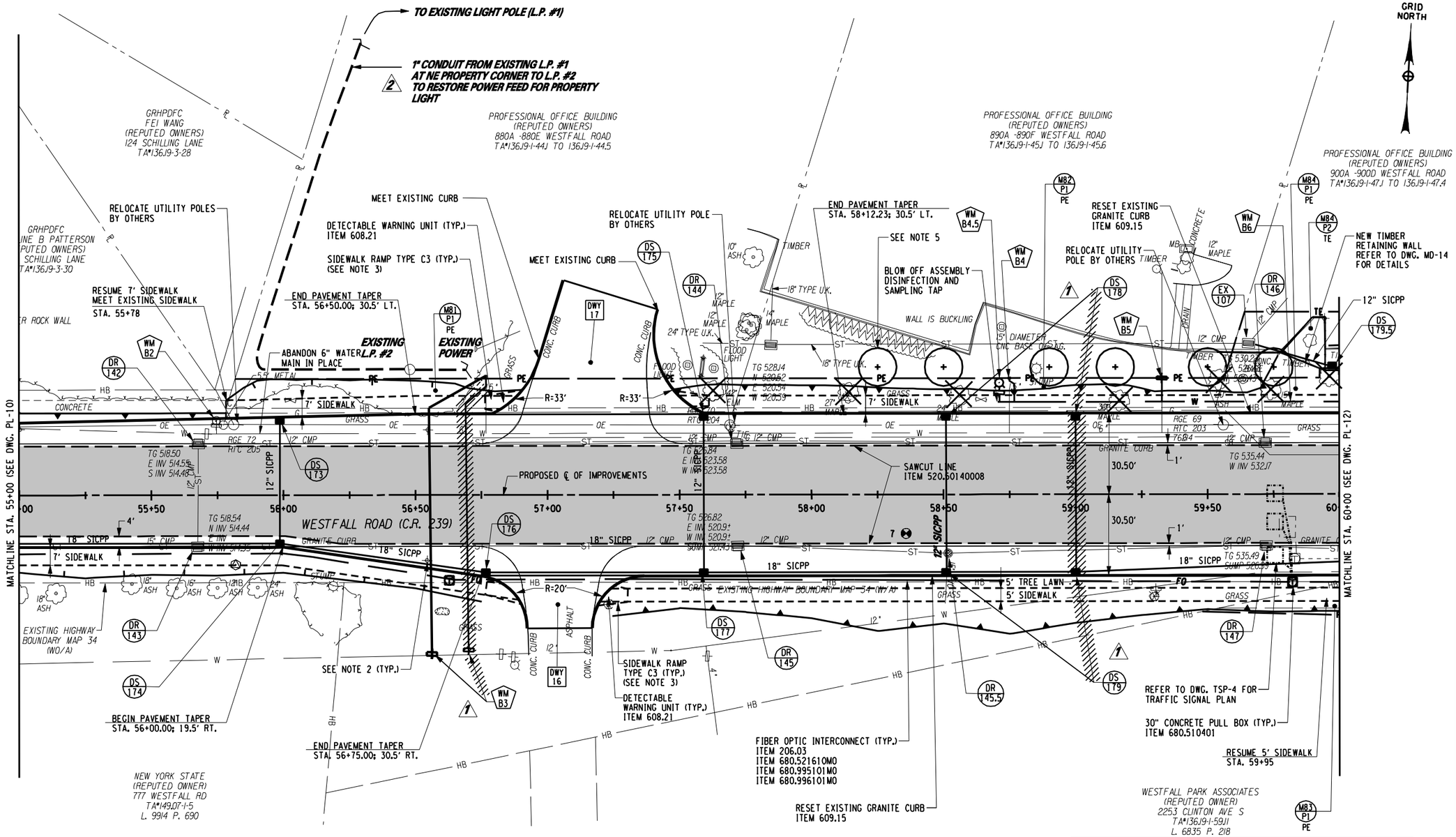

LEGEND

- 3½" PRODUCTION COLD MILLING - ITEM 490.10; 1½" ITEM 402.097302; 2" ITEM 402.197902
- 1½" MISCELLANEOUS COLD MILLING - ITEM 490.30; 1½" ITEM 402.097302
- TREE PROTECTION - ITEM 615.0402008 (REFER TO DETAILS ON DWG. MD-1, AND TREE PROTECTION TABLE ON DWG. MT-2)
- EXISTING TREES TO BE REMOVED (REFER TO TREE REMOVAL TABLE ON DWG. MT-2)
- MON-00 (REFER TO MONUMNET DISPOSITION TABLE ON DWG. MT-1)
- DS 100 — PROPOSED DRAINAGE STRUCTURE (REFER TO DRAINAGE TABLES, DWG. DT-1 THROUGH DT-4)
- DR 100 — DRAINAGE REMOVAL (REFER TO DRAINAGE REMOVAL TABLE, DWG. DT-4)
- EX 100 — EXISTING DRAINAGE STRUCTURE (REFER TO DRAINAGE TABLES, DWGS. DT-1 THROUGH DT-4)
- SA 101 — SANITARY SEWER ADJUSTMENT (REFER TO SANITARY MANHOLE TABLE ON DWG. UT-3)
- WM A1 — PROPOSED WATER MAIN/SERVICE WORK (REFER TO WATER TABLES ON DWG. MT-3)

NOTES

2. REFER TO DWGS. SPM-1 THROUGH SPM-16 FOR SIGNING AND STRIPING PLANS.
3. REFER TO DWG. MD-7 FOR SIDEWALK DETAILS.
4. REFER TO DWG. DT-4 FOR DRAINAGE STRUCTURE AND PIPE REMOVAL DETAILS.
5. REFER TO DWG. LS-1 FOR LANDSCAPING PLAN. A "TREE RELEASE" MUST BE OBTAINED BY THE EIC IN COORDINATION WITH THE CONTRACTOR FOR TREES PLANTED OUTSIDE THE COUNTY'S RIGHT-OF-WAY

"I hereby certify by my signature and seal below, that I have prepared this record drawing which is, to the best of my knowledge and in my professional opinion, a true representation of the work as constructed on the Westfall Road Improvements Phase III, Project No. 1409."

STATE OF NEW YORK · MATTHEW J. SCANDILLA · LICENSED PROFESSIONAL ENGINEER · No. 069983

40' 0 40' 80'

NO.	DATE	BY:	REVISION
1	10/13	JMW	REVISED LOCATION OF STORM DRAIN
2	12/27/14	JMW	1" CONDUIT

Barton & Loguidice, P.C.

DRAFTED BY: JMW/VJJB
DESIGN BY: JMW

DEPARTMENT OF TRANSPORTATION
50 WEST MAIN STREET, SUITE 6100
ROCHESTER, NEW YORK 14614-1231

UNAUTHORIZED ALTERATION OR ADDITION TO THIS DRAWING IS A VIOLATION OF THE NEW YORK STATE EDUCATION LAW ARTICLE 145, SECTION 7209

PROJECT NAME: WESTFALL ROAD
LIMITS: E. HENRIETTA ROAD TO LAC-DE-VILLE BLVD
TOWN: BRIGHTON
CITY: ROCHESTER
CAPITAL PROJECT NO.: 4753.77
BRIDGE IDENTIFICATION NO.: N.A.

PLAN
STA. 55+00
TO STA. 60+00

SCALE: AS SHOWN
DATE ISSUED: 4/25/2014
DRAWING NO. PL-11
SHEET NO. 65 OF 112

mek
I:\MicroStation\Workspace\PLOT\NYSDOT\NYSDOT_SIZE_B.TBL
I:\MicroStation\Workspace\Plot\NYSDOT\NYSDOT_HPLJ5200_B.plt

FILE NAME = I:\Shared\1000\1066005\AS-BUILTS\1066005_pl.11_r1.dgn
DATE = 4/25/2014
TIME = 10:34:23 AM

NOTES

2. REFER TO DWGS. SPM-1 THROUGH SPM-16 FOR SIGNING AND STRIPING PLANS.
3. REFER TO DWG. MD-7 FOR SIDEWALK DETAILS.
4. REFER TO DWG. DT-5 FOR DRAINAGE STRUCTURE AND PIPE REMOVAL DETAILS.
5. THE CONTRACTOR SHALL PRUNE ALL LIMBS AND BRANCHES LESS THAN 16 FEET ABOVE THE PAVEMENT. PAYMENT UNDER ITEM 201.06, CLEARING AND GRUBBING.
6. REMOVAL OF EXISTING LIGHT POST AND BASE SHALL BE INCLUDED IN THE COST OF ITEM 203.02. THE LIGHT POLE AND BASE SHALL BE PLACED ON THE OWNER'S PROPERTY ADJACENT TO THE WORK FOR THE OWNER'S DISPOSITION.

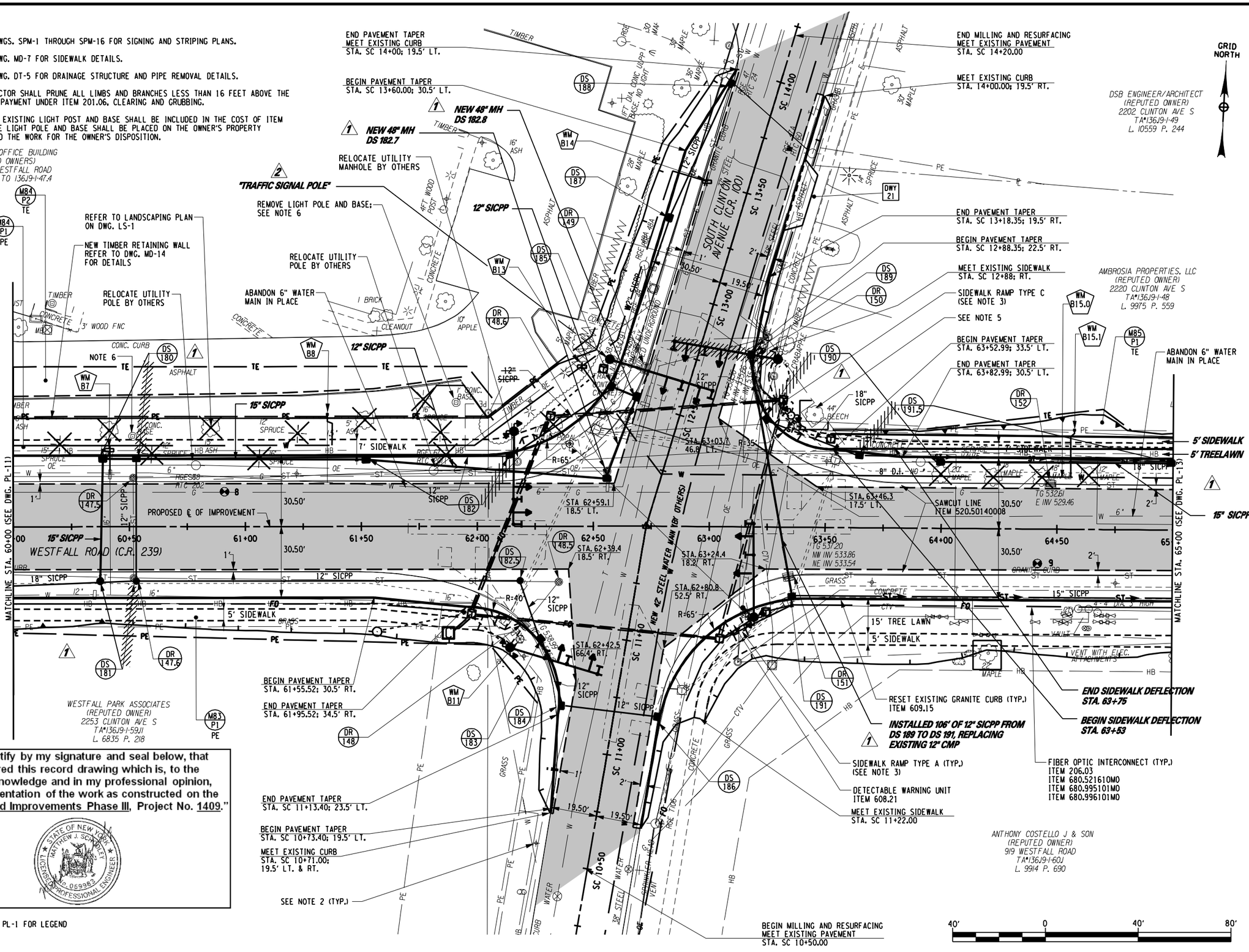

"I hereby certify by my signature and seal below, that I have prepared this record drawing which is, to the best of my knowledge and in my professional opinion, a true representation of the work as constructed on the Westfall Road Improvements Phase III, Project No. 1409."

STATE OF NEW YORK · MATTHEW J. SCANLEY · LICENSED PROFESSIONAL ENGINEER · 069986

LEGEND

REFER TO DWG. PL-1 FOR LEGEND

NO.	DATE	BY:	REVISION
1	10/4/13	JJMW	REVISED LOCATION OF STORM DRAIN & DS
2	10/4/13	JJMW	TRAFFIC SIGNAL POLE RELOCATED TO WESTSIDE

Barton & Loguidice, P.C.

DRAFTED BY: JMW/JJB
DESIGN BY: JMW

DEPARTMENT OF TRANSPORTATION
50 WEST MAIN STREET, SUITE 6100
ROCHESTER, NEW YORK 14614-1231

UNAUTHORIZED ALTERATION OR ADDITION TO THIS DRAWING IS A VIOLATION OF THE NEW YORK STATE EDUCATION LAW ARTICLE 145, SECTION 7209

PROJECT NAME: WESTFALL ROAD
LIMITS: E. HENRIETTA ROAD TO LAC-DE-VILLE BLVD
TOWN: BRIGHTON
CITY: ROCHESTER
CAPITAL PROJECT NO.: 4753.77
BRIDGE IDENTIFICATION NO.: N.A.

PLAN
STA. 60+00
TO STA. 65+00

SCALE: AS SHOWN
DATE ISSUED: 4/25/2014
DRAWING NO. PL-12
SHEET NO. 66 OF 112

mek
I:\MicroStation\Workspace\PLOT\NYSDOT\NYSDOT_SIZE_B.TBL
I:\MicroStation\Workspace\Plot\NYSDOT\NYSDOT_HPLJ5200_B.plt

FILE NAME = I:\Shared\1000\1066005\AS-BUILTS\1066005_pl_12.dgn
DATE = 4/25/2014
TIME = 10:35:27 AM

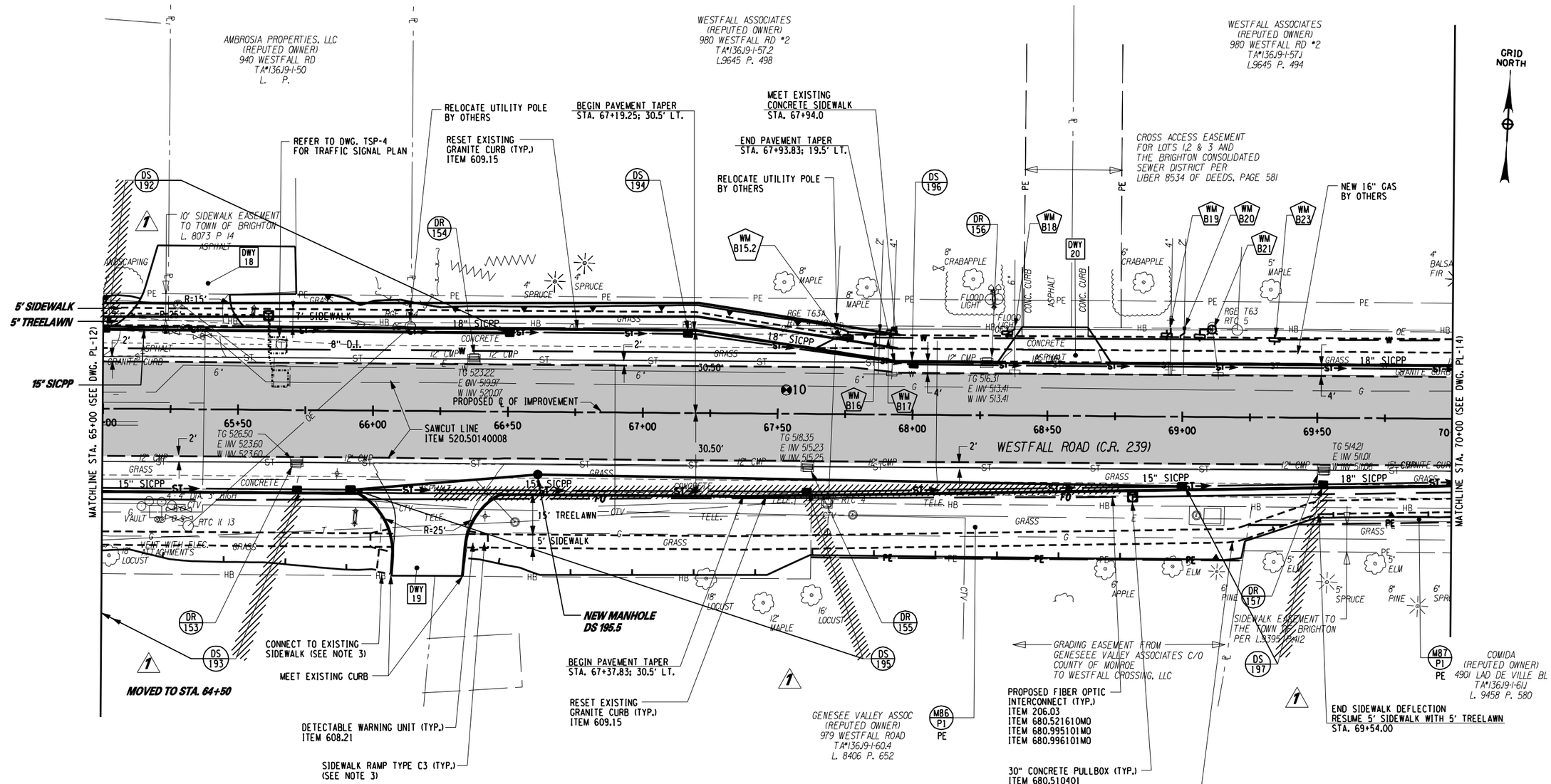

LEGEND

- 3½" PRODUCTION COLD MILLING - ITEM 490.10
- 1½" ITEM 402.097302
- 2" ITEM 402.197902
- 1½" MISCELLANEOUS COLD MILLING - ITEM 490.30
- 1½" ITEM 402.097302
- TREE PROTECTION - ITEM 615.0402008 (REFER TO DETAILS ON DWG. MD-1, AND TREE PROTECTION TABLE ON DWG. MT-2)
- EXISTING TREES TO BE REMOVED (REFER TO TREE REMOVAL TABLE ON DWG. MT-2)
- MON-00 (REFER TO MONUMNET DISPOSITION TABLE ON DWG. MT-1)
- DS 100 PROPOSED DRAINAGE STRUCTURE (REFER TO DRAINAGE TABLES, DWG. DT-1 THROUGH DT-4)
- DR 100 DRAINAGE REMOVAL (REFER TO DRAINAGE REMOVAL TABLE, DWG. DT-4)
- EX 100 EXISTING DRAINAGE STRUCTURE (REFER TO DRAINAGE TABLES, DWGS. DT-1 THROUGH DT-4)
- SA 101 SANITARY SEWER ADJUSTMENT (REFER TO SANITARY MANHOLE TABLE ON DWG. UT-3)
- WM A1 PROPOSED WATER MAIN/SERVICE WORK (REFER TO WATER TABLES ON DWG. MT-3)

NOTES

2. REFER TO DWGS. SPM-1 THROUGH SPM-16 FOR SIGNING AND STRIPING PLANS.
3. REFER TO DWG. MD-7 FOR SIDEWALK DETAILS.
4. REFER TO DWG. DT-5 FOR DRAINAGE STRUCTURE AND PIPE REMOVAL DETAILS.
5. REFER TO DWG. TSP-4 FOR TRAFFIC SIGNAL INFORMATION.

"I hereby certify by my signature and seal below, that I have prepared this record drawing which is, to the best of my knowledge and in my professional opinion, a true representation of the work as constructed on the Westfall Road Improvements Phase III, Project No. 1409."

STATE OF NEW YORK · MATTHEW J. SCHOLTZ · No. 059983 · LICENSED PROFESSIONAL ENGINEER

NO.	DATE	BY:	REVISION
1	10/4/13	JJMW	REVISED LOCATION OF STORM DRAIN & DS

Barton & Loguidice, P.C.

DRAFTED BY: JMW/JJB
DESIGN BY: JMW

DEPARTMENT OF TRANSPORTATION
50 WEST MAIN STREET, SUITE 6100
ROCHESTER, NEW YORK 14614-1231

UNAUTHORIZED ALTERATION OR ADDITION TO THIS DRAWING IS A VIOLATION OF THE NEW YORK STATE EDUCATION LAW ARTICLE 145, SECTION 7209

PROJECT NAME: WESTFALL ROAD
LIMITS: E. HENRIETTA ROAD TO LAC-DE-VILLE BLVD
TOWN: BRIGHTON
CITY: ROCHESTER
CAPITAL PROJECT NO.: 4753.77
BRIDGE IDENTIFICATION NO.: N.A.

PLAN
STA. 65+00
TO STA. 70+00

SCALE: AS SHOWN
DATE ISSUED: 4/25/2014
DRAWING NO. PL-13
SHEET NO. 67 OF 112

mek
I:\MicroStation\Workspace\PLOT\NYSDOT\NYSDOT_SIZE_B.TBL
I:\MicroStation\Workspace\Plot\NYSDOT\NYSDOT_HPLJ5200_B.plt

FILE NAME = I:\Shared\1000\10660005\AS-BUILTS\10660005_pl_13.dgn
DATE = 4/25/2014
TIME = 10:36:06 AM

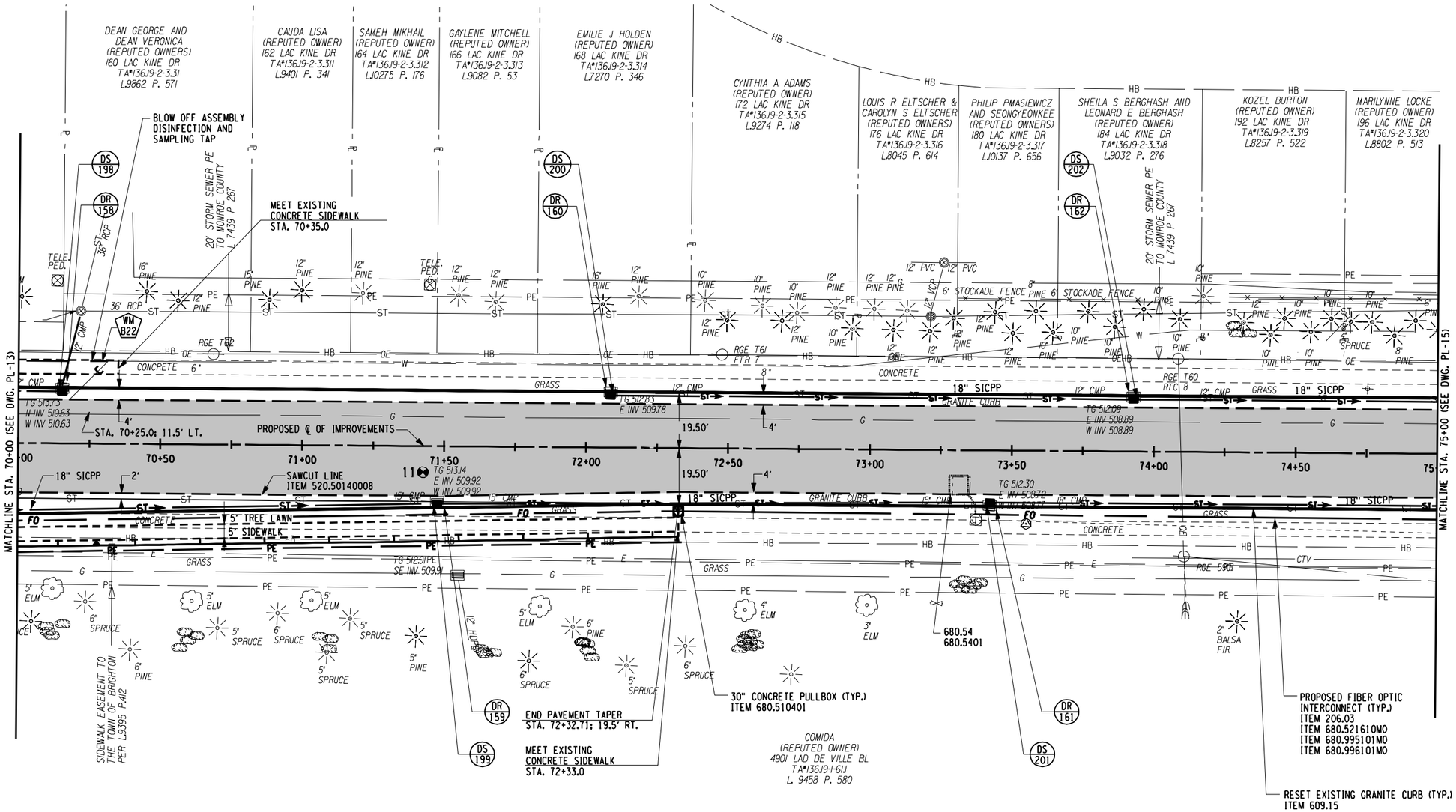

LEGEND

- 3½" PRODUCTION COLD MILLING - ITEM 490.10
  1½" ITEM 402.097302
  2 " ITEM 402.197902
- 1½" MISCELLANEOUS COLD MILLING - ITEM 490.30
  1½" ITEM 402.097302
- TREE PROTECTION - ITEM 615.0402008 (REFER TO DETAILS ON DWG. MD-1, AND TREE PROTECTION TABLE ON DWG. MT-2)
- EXISTING TREES TO BE REMOVED (REFER TO TREE REMOVAL TABLE ON DWG. MT-2)
- MON-00 (REFER TO MONUMNET DISPOSITION TABLE ON DWG. MT-1)
- DS 100 PROPOSED DRAINAGE STRUCTURE (REFER TO DRAINAGE TABLES, DWG. DT-1 THROUGH DT-4)
- DR 100 DRAINAGE REMOVAL (REFER TO DRAINAGE REMOVAL TABLE, DWG. DT-4)
- EX 100 EXISTING DRAINAGE STRUCTURE (REFER TO DRAINAGE TABLES, DWGS. DT-1 THROUGH DT-4)
- SA 101 SANITARY SEWER ADJUSTMENT (REFER TO SANITARY MANHOLE TABLE ON DWG. UT-3)
- WM A1 PROPOSED WATER MAIN/SERVICE WORK (REFER TO WATER TABLES ON DWG. MT-3)

NOTES

2. REFER TO DWGS. SPM-1 THROUGH SPM-16 FOR SIGNING AND STRIPING PLANS.
3. REFER TO DWG. MD-7 FOR SIDEWALK DETAILS.
4. REFER TO DWG. DT-5 FOR DRAINAGE STRUCTURE AND PIPE REMOVAL DETAILS.

"I hereby certify by my signature and seal below, that I have prepared this record drawing which is, to the best of my knowledge and in my professional opinion, a true representation of the work as constructed on the Westfall Road Improvements Phase III, Project No. 1409."

STATE OF NEW YORK · MATTHEW J. SCANLEY · No. 069983 · LICENSED PROFESSIONAL ENGINEER

40' 0 40' 80'

NO AS-BUILT REVISIONS

NO.	DATE	BY:	REVISION

Barton & Loguidice, P.C.

DRAFTED BY: JMW/JJB
DESIGN BY: JMW

DEPARTMENT OF TRANSPORTATION
50 WEST MAIN STREET, SUITE 6100
ROCHESTER, NEW YORK 14614-1231

UNAUTHORIZED ALTERATION OR ADDITION TO THIS DRAWING IS A VIOLATION OF THE NEW YORK STATE EDUCATION LAW ARTICLE 145, SECTION 7209

PROJECT NAME: WESTFALL ROAD
LIMITS: E. HENRIETTA ROAD TO LAC-DE-VILLE BLVD
TOWN: BRIGHTON
CITY: ROCHESTER
CAPITAL PROJECT NO.: 4753.77
BRIDGE IDENTIFICATION NO.: N.A.

PLAN
STA. 70+00
TO STA. 75+00

SCALE: AS SHOWN
DATE ISSUED: 4/25/2014
DRAWING NO. PL-14
SHEET NO. 68 OF 112

mek
I:\MicroStation\Workspace\PLOT\NYSDOT\NYSDOT_SIZE_B.TBL
I:\MicroStation\Workspace\Plot\NYSDOT\NYSDOT_HPLJ5200_B.plt

FILE NAME = I:\Shared\1000\1066005\AS-BUILTS\1066005_pl_14.dgn
DATE = 4/25/2014
TIME = 10:36:29 AM

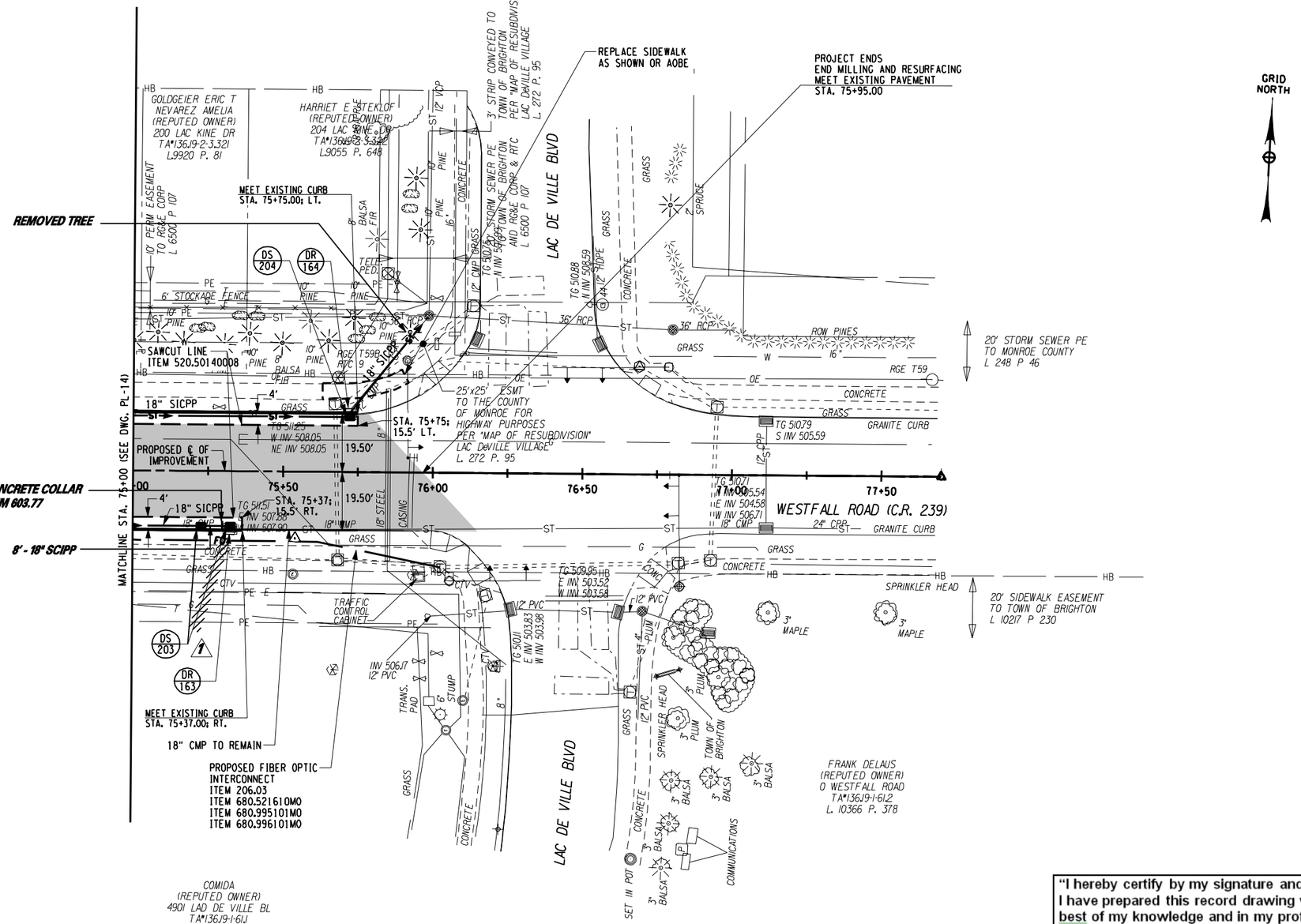

LEGEND

- 3½" PRODUCTION COLD MILLING - ITEM 490.10; 1½" ITEM 402.097302; 2" ITEM 402.197902
- 1½" MISCELLANEOUS COLD MILLING - ITEM 490.30; 1½" ITEM 402.097302
- TREE PROTECTION - ITEM 615.0402008 (REFER TO DETAILS ON DWG. MD-1, AND TREE PROTECTION TABLE ON DWG. MT-2)
- EXISTING TREES TO BE REMOVED (REFER TO TREE REMOVAL TABLE ON DWG. MT-2)
- MON-00 (REFER TO MONUMNET DISPOSITION TABLE ON DWG. MT-1)
- DS 100 PROPOSED DRAINAGE STRUCTURE (REFER TO DRAINAGE TABLES, DWG. DT-1 THROUGH DT-4)
- DR 100 DRAINAGE REMOVAL (REFER TO DRAINAGE REMOVAL TABLE, DWG. DT-4)
- EX 100 EXISTING DRAINAGE STRUCTURE (REFER TO DRAINAGE TABLES, DWGS. DT-1 THROUGH DT-4)
- SA 101 SANITARY SEWER ADJUSTMENT (REFER TO SANITARY MANHOLE TABLE ON DWG. UT-3)
- WM A1 PROPOSED WATER MAIN/SERVICE WORK (REFER TO WATER TABLES ON DWG. MT-3)

NOTES

2. REFER TO DWGS. SPM-1 THROUGH SPM-16 FOR SIGNING AND STRIPING PLANS.
3. REFER TO DWG. MD-7 FOR SIDEWALK DETAILS.
4. REFER TO DWG. DT-5 FOR DRAINAGE STRUCTURE AND PIPE REMOVAL DETAILS.

"I hereby certify by my signature and seal below, that I have prepared this record drawing which is, to the best of my knowledge and in my professional opinion, a true representation of the work as constructed on the Westfall Road Improvements Phase III, Project No. 1409."

STATE OF NEW YORK · MATTHEW J. SCHOLLE · No. 069983 · LICENSED PROFESSIONAL ENGINEER

40' 0 40' 80'

NO.	DATE	BY:	REVISION
1	10/1/13	JJMW	REVISED LOCATION OF STORM DRAIN & DS

Barton & Loguidice, P.C.

DESIGN BY: JMW | DRAFTED BY: JMW/JJB

DEPARTMENT OF TRANSPORTATION
50 WEST MAIN STREET, SUITE 6100
ROCHESTER, NEW YORK 14614-1231

UNAUTHORIZED ALTERATION OR ADDITION TO THIS DRAWING IS A VIOLATION OF THE NEW YORK STATE EDUCATION LAW ARTICLE 145, SECTION 7209

PROJECT NAME: WESTFALL ROAD
LIMITS: E. HENRIETTA ROAD TO LAC-DE-VILLE BLVD
TOWN: BRIGHTON | CITY: ROCHESTER
CAPITAL PROJECT NO.: 4753.77 | BRIDGE IDENTIFICATION NO.: N.A.

PLAN
STA. 75+00
TO STA. 77+68

SCALE: AS SHOWN
DATE ISSUED: 4/25/2014
DRAWING NO. PL-15
SHEET NO. 69 OF 112

mek
I:\MicroStation\Workspace\PLOT\NYSDOT\NYSDOT_SIZE_B.TBL
I:\MicroStation\Workspace\Plot\NYSDOT\NYSDOT_HPLJ5200_B.plt

FILE NAME = I:\Shared\1000\1066005\AS-BUILTS\1066005_pl.15.dgn
DATE = 4/25/2014
TIME = 10:36:55 AM

mek
I:\MicroStation\Workspace\PLOT\NYSDOT\NYSDOT_SIZE_B.TBL
I:\MicroStation\Workspace\Plot\NYSDOT\NYSDOT_HPLJ5200_B.plt

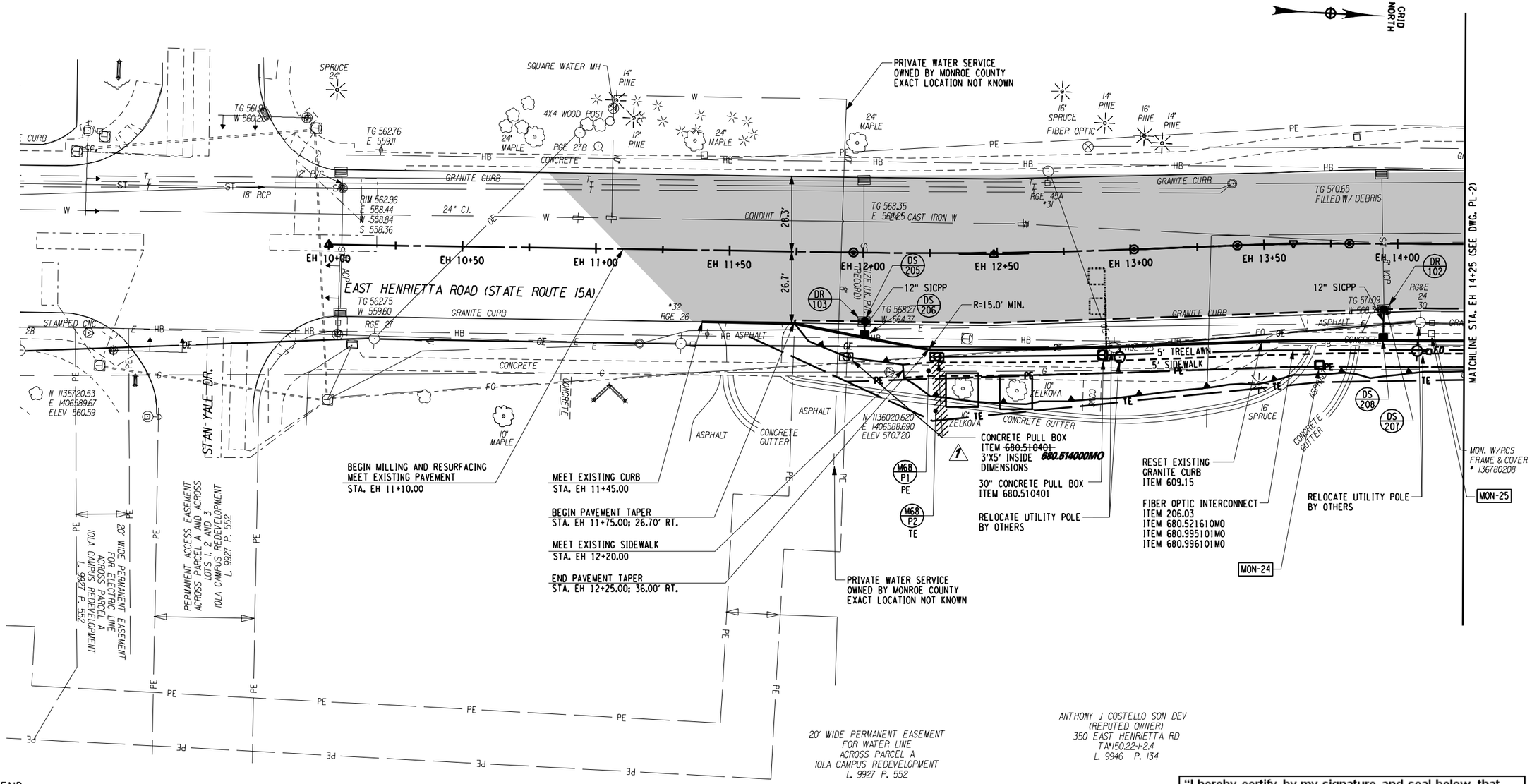

LEGEND

- 3½" PRODUCTION COLD MILLING - ITEM 490.10
  1½" ITEM 402.097302
  2" ITEM 402.197902
- 1½" MISCELLANEOUS COLD MILLING - ITEM 490.30
  1½" ITEM 402.097302
- TREE PROTECTION - ITEM 615.0402008 (REFER TO DETAILS ON DWG. MD-1, AND TREE PROTECTION TABLE ON DWG. MT-2)
- EXISTING TREES TO BE REMOVED (REFER TO TREE REMOVAL TABLE ON DWG. MT-2)
- MON-00 (REFER TO MONUMNET DISPOSITION TABLE ON DWG. MT-1)
- DS 100 PROPOSED DRAINAGE STRUCTURE (REFER TO DRAINAGE TABLES, DWG. DT-1 THROUGH DT-4)
- DR 100 DRAINAGE REMOVAL (REFER TO DRAINAGE REMOVAL TABLE, DWG. DT-4)
- EX 100 EXISTING DRAINAGE STRUCTURE (REFER TO DRAINAGE TABLES, DWGS. DT-1 THROUGH DT-4)
- SA 101 SANITARY SEWER ADJUSTMENT (REFER TO SANITARY MANHOLE TABLE ON DWG. UT-3)
- WM A1 PROPOSED WATER MAIN/SERVICE WORK (REFER TO WATER TABLES ON DWG. MT-3)

NOTES

2. REFER TO DWGS. SPM-1 THROUGH SPM-16 FOR SIGNING AND STRIPING PLANS.
3. REFER TO DWG. MD-7 FOR SIDEWALK DETAILS.
4. REFER TO DWG. DT-5 FOR DRAINAGE STRUCTURE AND PIPE REMOVAL DETAILS.

"I hereby certify by my signature and seal below, that I have prepared this record drawing which is, to the best of my knowledge and in my professional opinion, a true representation of the work as constructed on the Westfall Road Improvements Phase III, Project No. 1409."

STATE OF NEW YORK · MATTHEW J. SCANLEY · LICENSED PROFESSIONAL ENGINEER · NO. 069983

40' 0 40' 80'

NO.	DATE	BY:	REVISION
1	08/07	JMW	RELOCATED CONCRETE PULL BOX

Barton & Loguidice, P.C.

DRAFTED BY: JMW/JJB
DESIGN BY: JMW

DEPARTMENT OF TRANSPORTATION
50 WEST MAIN STREET, SUITE 6100
ROCHESTER, NEW YORK 14614-1231

UNAUTHORIZED ALTERATION OR ADDITION TO THIS DRAWING IS A VIOLATION OF THE NEW YORK STATE EDUCATION LAW ARTICLE 145, SECTION 7209

PROJECT NAME: WESTFALL ROAD
LIMITS: E. HENRIETTA ROAD TO LAC-DE-VILLE BLVD
TOWN: BRIGHTON
CITY: ROCHESTER
CAPITAL PROJECT NO.: 4753.77
BRIDGE IDENTIFICATION NO.: N.A.

PLAN
STA. EH 10+00
TO STA. EH 14+25

SCALE: AS SHOWN
DATE ISSUED: 4/25/2014
DRAWING NO. PL-16
SHEET NO. 70 OF 112

FILE NAME = I:\Shared\1000\1066005\AS-BUILTS\1066005_pl_16.dgn
DATE = 4/25/2014
TIME = 10:31:24 AM

SEWER LEGEND

- PROPOSED SEWER, RIGHT OF HCL
- PROPOSED SEWER, LEFT OF HCL
- EXISTING SEWER, RIGHT OF HCL
- EXISTING SEWER, LEFT OF HCL

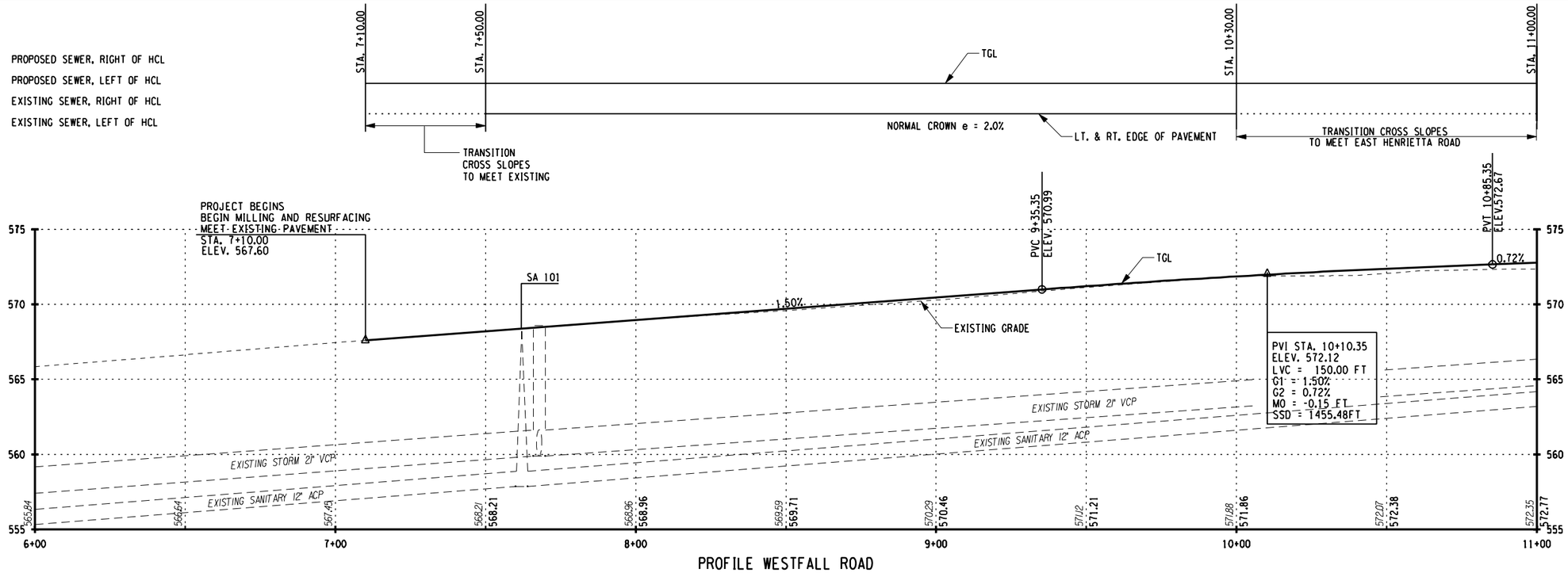

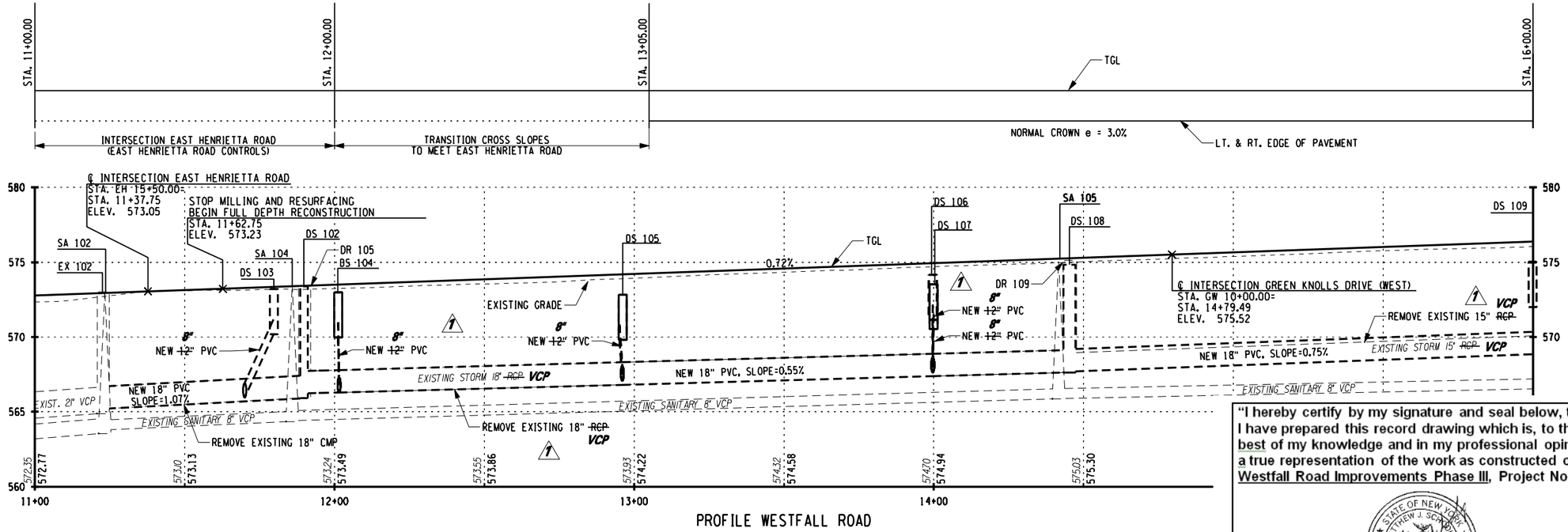

VERTICAL SCALE 0 4 8'

HORIZONTAL SCALE 0 20 40 60 80'

"I hereby certify by my signature and seal below, that I have prepared this record drawing which is, to the best of my knowledge and in my professional opinion, a true representation of the work as constructed on the Westfall Road Improvements Phase III, Project No. 1409."

STATE OF NEW YORK · MATTHEW J. SCHMITT · No. 069983 · LICENSED PROFESSIONAL ENGINEER

NO.	DATE	BY:	REVISION
1	10/17	JMW	REVISED SIZE OF PVC STORM PIPE & NAMING

Barton & Loguidice, P.C.

DRAFTED BY: JMW/JJB

DESIGN BY: JMW

DEPARTMENT OF TRANSPORTATION
50 WEST MAIN STREET, SUITE 6100
ROCHESTER, NEW YORK 14614-1231

UNAUTHORIZED ALTERATION OR ADDITION TO THIS DRAWING IS A VIOLATION OF THE NEW YORK STATE EDUCATION LAW ARTICLE 145, SECTION 7209

PROJECT NAME: WESTFALL ROAD
LIMITS: E. HENRIETTA ROAD TO LAC-DE-VILLE BLVD
TOWN: BRIGHTON
CITY: ROCHESTER
CAPITAL PROJECT NO.: 4753.77
BRIDGE IDENTIFICATION NO.: N.A.

MAINLINE PROFILE
STA. 6+00
TO STA. 16+00

SCALE: AS SHOWN
DATE ISSUED: 4/25/2014
DRAWING NO. PR-1
SHEET NO. 71 OF 112

mek
I:\MicroStation\Workspace\PLOT\NYSDOT\NYSDOT_SIZE_B.TBL
I:\MicroStation\Workspace\Plot\NYSDOT\NYSDOT_HPLJ5200_B.plt

FILE NAME = I:\Shared\1000\1066005\AS-BUILTS\1066005_pro_01.dgn
DATE = 4/25/2014
TIME = 10:38:05 AM

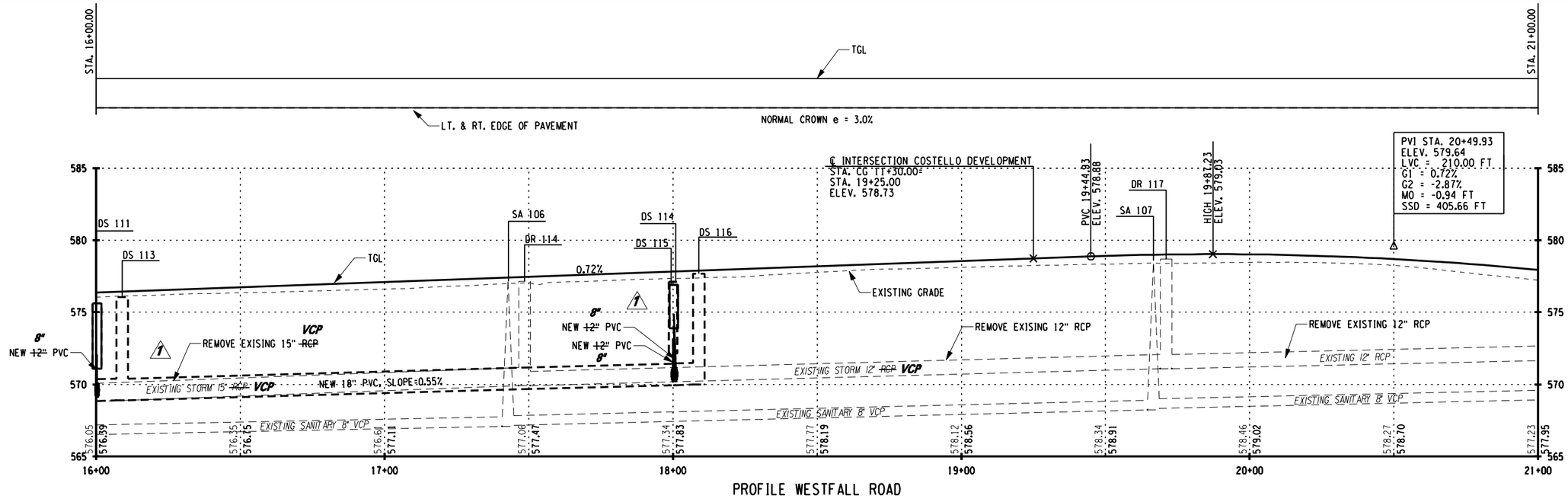

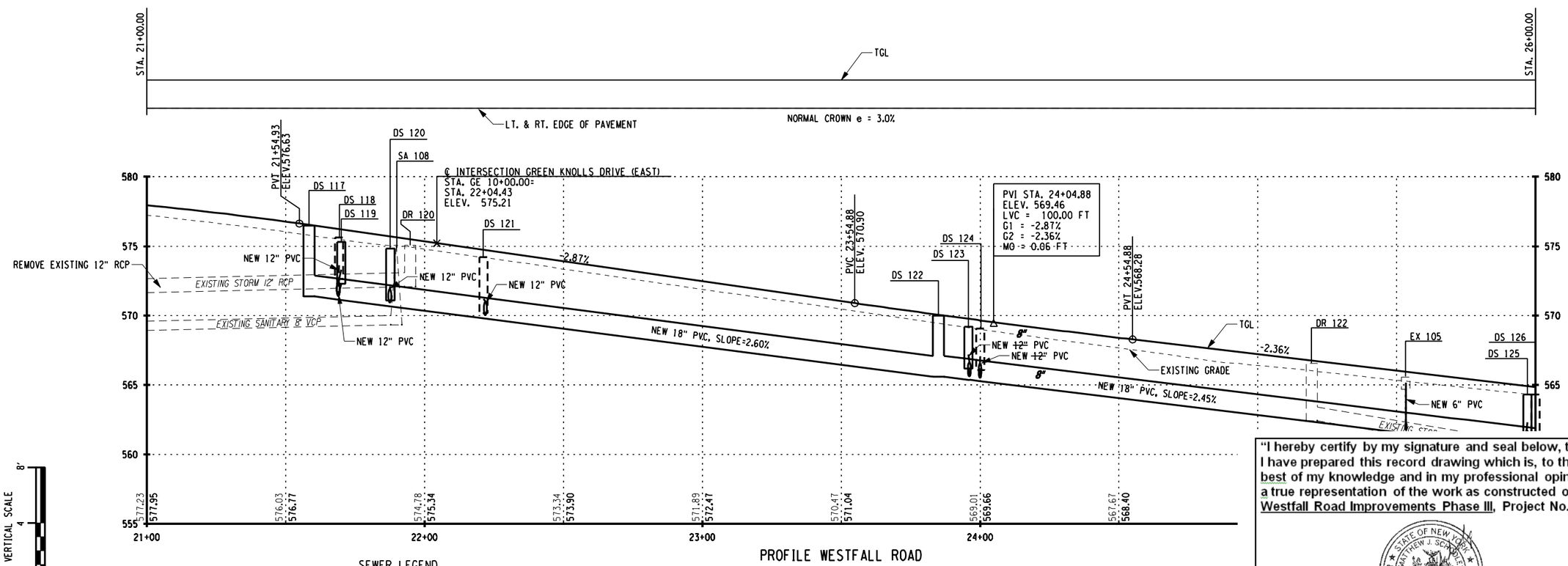

SEWER LEGEND

- PROPOSED SEWER, RIGHT OF HCL
- PROPOSED SEWER, LEFT OF HCL
- EXISTING SEWER, RIGHT OF HCL
- EXISTING SEWER, LEFT OF HCL

"I hereby certify by my signature and seal below, that I have prepared this record drawing which is, to the best of my knowledge and in my professional opinion, a true representation of the work as constructed on the Westfall Road Improvements Phase III, Project No. 1409."

STATE OF NEW YORK · MATTHEW J. SCHMITT · No. 069983 · LICENSED PROFESSIONAL ENGINEER

NO.	DATE	BY:	REVISION
1	10/17	JMW	REVISED SIZE OF PVC STORM PIPE & NAMING

Barton & Loguidice, P.C.

DRAFTED BY: JMW/JJB

DESIGN BY: JMW

DEPARTMENT OF TRANSPORTATION
50 WEST MAIN STREET, SUITE 6100
ROCHESTER, NEW YORK 14614-1231

UNAUTHORIZED ALTERATION OR ADDITION TO THIS DRAWING IS A VIOLATION OF THE NEW YORK STATE EDUCATION LAW ARTICLE 145, SECTION 7209

PROJECT NAME: WESTFALL ROAD
LIMITS: E. HENRIETTA ROAD TO LAC-DE-VILLE BLVD
TOWN: BRIGHTON
CITY: ROCHESTER
CAPITAL PROJECT NO.: 4753.77
BRIDGE IDENTIFICATION NO.: N.A.

MAINLINE PROFILE
STA. 16+00
TO STA. 26+00

SCALE: AS SHOWN
DATE ISSUED: 4/25/2014
DRAWING NO. PR-2
SHEET NO. 72 OF 112

mek
I:\MicroStation\Workspace\PLOT\NYSDOT\NYSDOT_SIZE_B.TBL
I:\MicroStation\Workspace\Plot\NYSDOT\NYSDOT_HPLJ5200_B.plt

FILE NAME = I:\Shared\1000\1066005\AS-BUILTS\1066005_pro_02.dgn
DATE = 4/25/2014
TIME = 10:38:35 AM

mek
I:\MicroStation\Workspace\PLOT\NYSDOT\NYSDOT_SIZE_B.TBL
I:\MicroStation\Workspace\Plot\NYSDOT\NYSDOT_HPLJ5200_B.plt

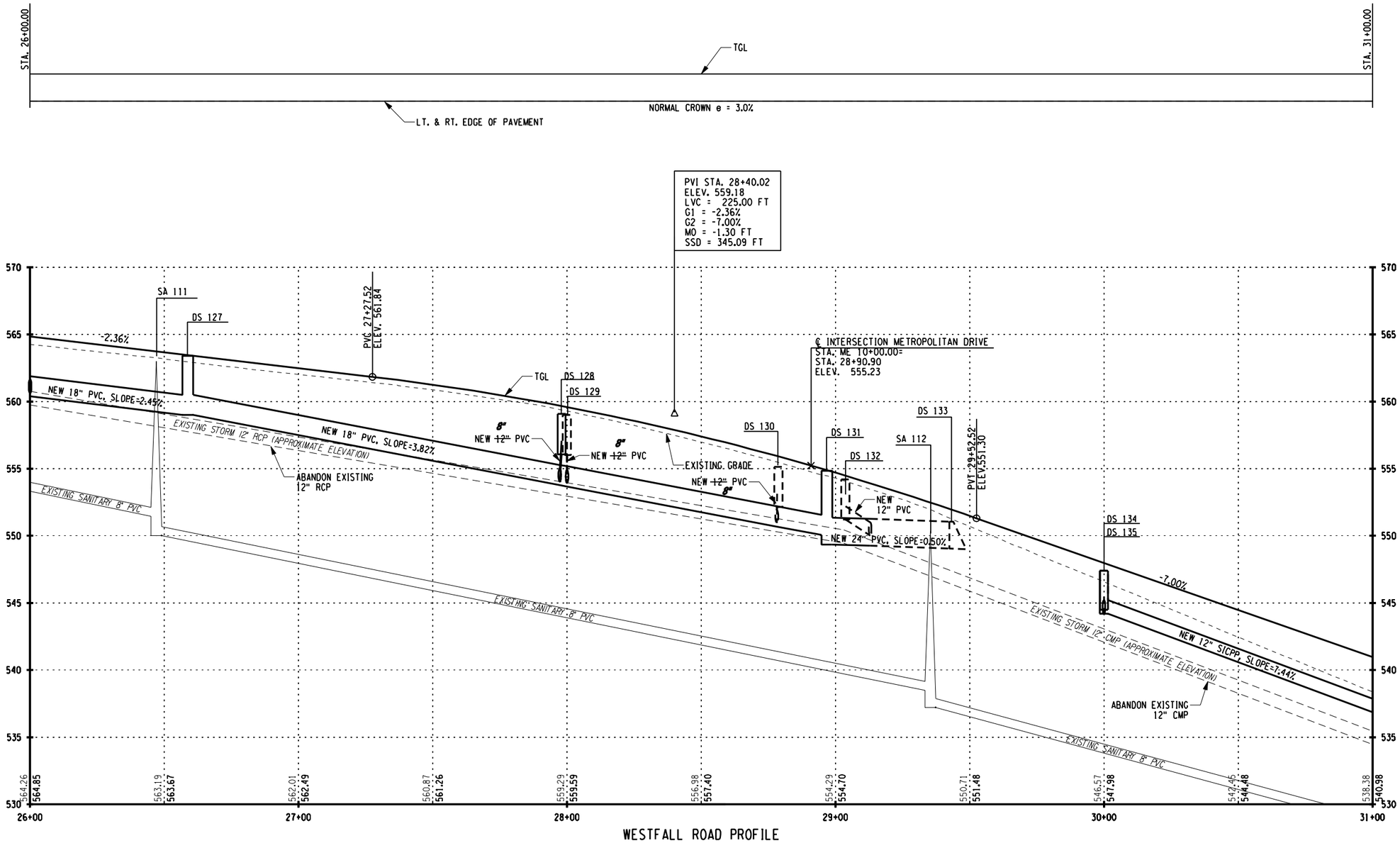

WESTFALL ROAD PROFILE

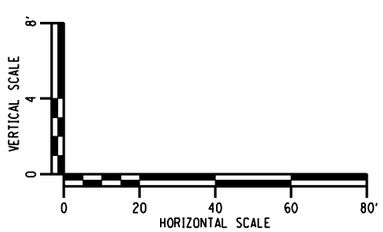

"I hereby certify by my signature and seal below, that I have prepared this record drawing which is, to the best of my knowledge and in my professional opinion, a true representation of the work as constructed on the Westfall Road Improvements Phase III, Project No. 1409."

STATE OF NEW YORK · MATTHEW J. SCHOLLY · No. 069983 · LICENSED PROFESSIONAL ENGINEER

SEWER LEGEND

- PROPOSED SEWER, RIGHT OF HCL
- PROPOSED SEWER, LEFT OF HCL
- EXISTING SEWER, RIGHT OF HCL
- EXISTING SEWER, LEFT OF HCL

NO.	DATE	BY:	REVISION
1	10/17	JJW	REVISED SIZE OF PVC STORM PIPE

Barton & Loguidice, P.C.

DRAFTED BY: JMW/JJB
DESIGN BY: JMW

DEPARTMENT OF TRANSPORTATION
50 WEST MAIN STREET, SUITE 6100
ROCHESTER, NEW YORK 14614-1231

UNAUTHORIZED ALTERATION OR ADDITION TO THIS DRAWING IS A VIOLATION OF THE NEW YORK STATE EDUCATION LAW ARTICLE 145, SECTION 7209

PROJECT NAME: WESTFALL ROAD
LIMITS: E. HENRIETTA ROAD TO LAC-DE-VILLE BLVD
TOWN: BRIGHTON
CITY: ROCHESTER
CAPITAL PROJECT NO.: 4753.77
BRIDGE IDENTIFICATION NO.: N.A.

MAINLINE PROFILE
STA. 26+00
TO STA. 31+00

SCALE: AS SHOWN
DATE ISSUED: 4/25/2014
DRAWING NO. PR-3
SHEET NO. 73 OF 112

FILE NAME = I:\Shared\1000\1066005\AS-BUILTS\1066005_pro_03.dgn
DATE = 4/25/2014
TIME = 10:39:00 AM

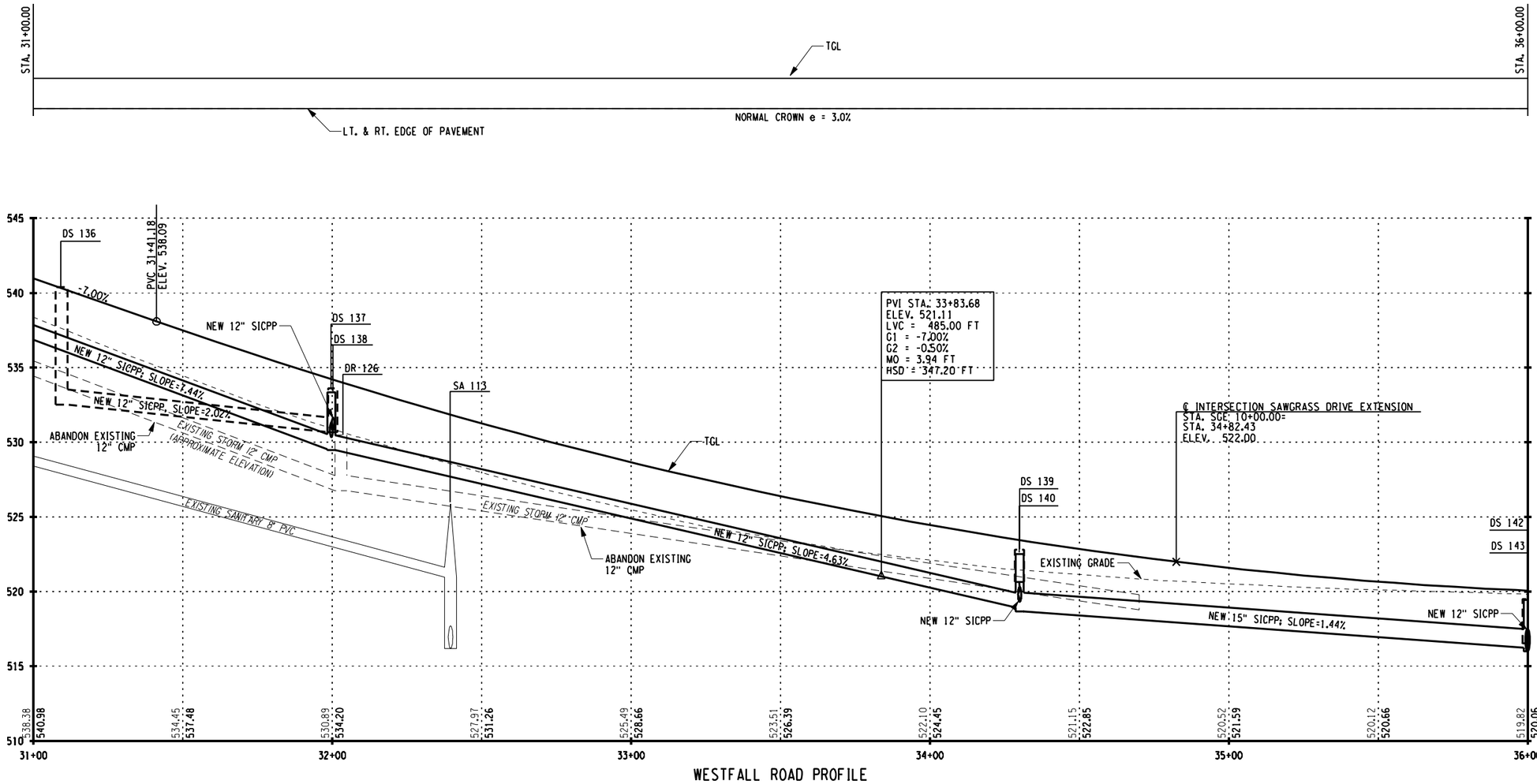

WESTFALL ROAD PROFILE

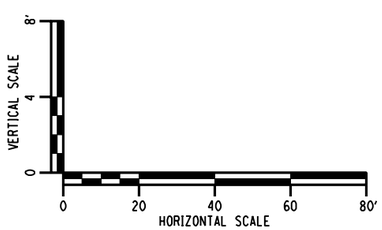

"I hereby certify by my signature and seal below, that I have prepared this record drawing which is, to the best of my knowledge and in my professional opinion, a true representation of the work as constructed on the Westfall Road Improvements Phase III, Project No. 1409."

STATE OF NEW YORK · MATTHEW J. SCHUDLET · No. 069983 · LICENSED PROFESSIONAL ENGINEER

SEWER LEGEND

- PROPOSED SEWER, RIGHT OF HCL
- PROPOSED SEWER, LEFT OF HCL
- EXISTING SEWER, RIGHT OF HCL
- EXISTING SEWER, LEFT OF HCL

NO AS-BUILT REVISIONS

NO.	DATE	BY:	REVISION

Barton & Loguidice, P.C.

DRAFTED BY: JMW/JJB

DESIGN BY: JMW

DEPARTMENT OF TRANSPORTATION
50 WEST MAIN STREET, SUITE 6100
ROCHESTER, NEW YORK 14614-1231

UNAUTHORIZED ALTERATION OR ADDITION TO THIS DRAWING IS A VIOLATION OF THE NEW YORK STATE EDUCATION LAW ARTICLE 145, SECTION 7209

PROJECT NAME: WESTFALL ROAD
LIMITS: E. HENRIETTA ROAD TO LAC-DE-VILLE BLVD
TOWN: BRIGHTON
CITY: ROCHESTER
CAPITAL PROJECT NO.: 4753.77
BRIDGE IDENTIFICATION NO.: N.A.

MAINLINE PROFILE
STA. 31+00
TO STA. 36+00

SCALE: AS SHOWN
DATE ISSUED: 4/25/2014
DRAWING NO. PR-4
SHEET NO. 74 OF 112

mek
I:\MicroStation\Workspace\PLOT\NYSDOT\NYSDOT_SIZE_B.TBL
I:\MicroStation\Workspace\Plot\NYSDOT\NYSDOT_HPLJ5200_B.plt

FILE NAME = I:\Shared\1000\1066005\AS-BUILTS\1066005_pro_04.dgn
DATE = 4/25/2014
TIME = 10:39:23 AM

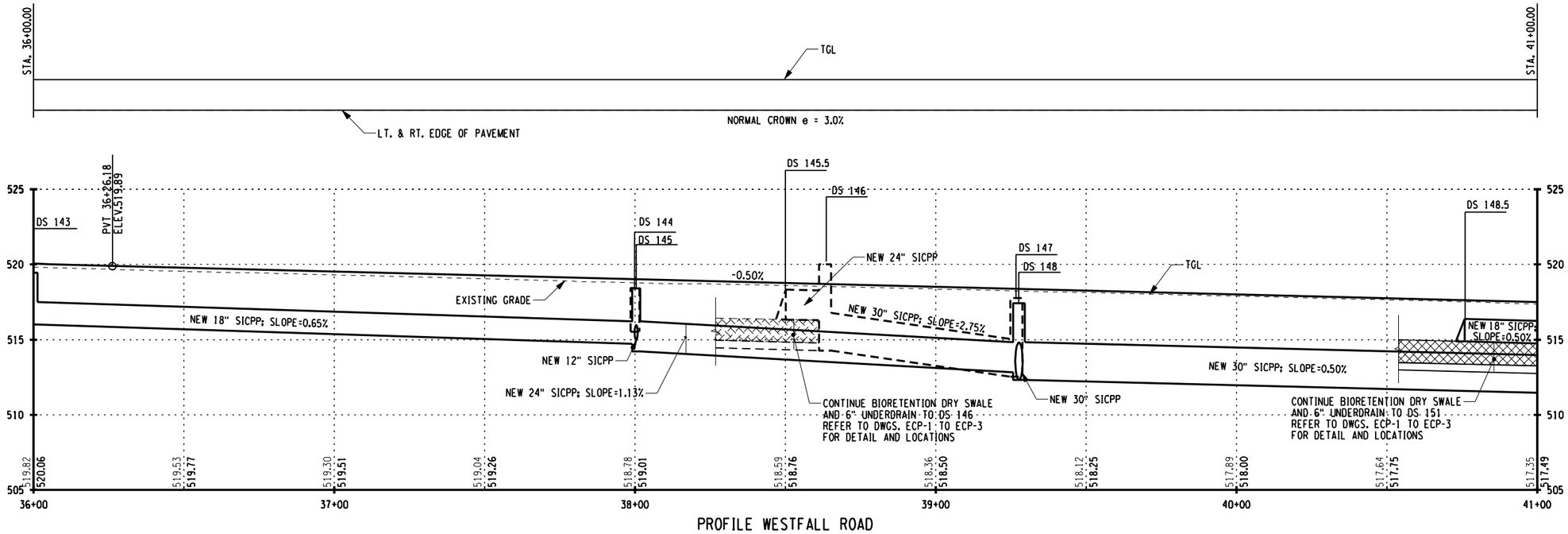

PROFILE WESTFALL ROAD

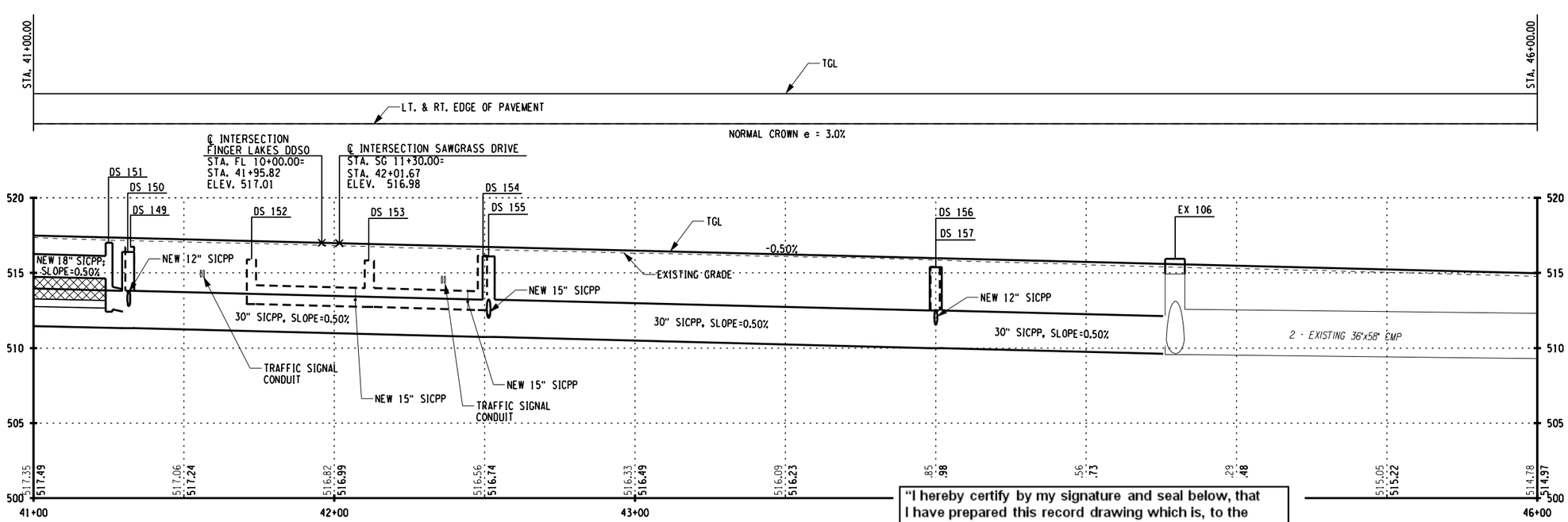

PROFILE WESTFALL ROAD

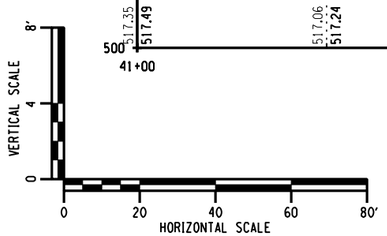

"I hereby certify by my signature and seal below, that I have prepared this record drawing which is, to the best of my knowledge and in my professional opinion, a true representation of the work as constructed on the Westfall Road Improvements Phase III, Project No. 1409."

STATE OF NEW YORK · MATTHEW J. SCANLON · No. 069963 · LICENSED PROFESSIONAL ENGINEER

SEWER LEGEND

- PROPOSED SEWER, RIGHT OF HCL
- PROPOSED SEWER, LEFT OF HCL
- EXISTING SEWER, RIGHT OF HCL
- EXISTING SEWER, LEFT OF HCL

NO AS-BUILT REVISIONS

NO.	DATE	BY:	REVISION

Barton & Loguidice, P.C.

DRAFTED BY: JMW/JJB

DESIGN BY: JMW

DEPARTMENT OF TRANSPORTATION
50 WEST MAIN STREET, SUITE 6100
ROCHESTER, NEW YORK 14614-1231

UNAUTHORIZED ALTERATION OR ADDITION TO THIS DRAWING IS A VIOLATION OF THE NEW YORK STATE EDUCATION LAW ARTICLE 145, SECTION 7209

PROJECT NAME: WESTFALL ROAD
LIMITS: E. HENRIETTA ROAD TO LAC-DE-VILLE BLVD
TOWN: BRIGHTON
CITY: ROCHESTER
CAPITAL PROJECT NO.: 4753.77
BRIDGE IDENTIFICATION NO.: N.A.

MAINLINE PROFILE
STA. 36+00
TO STA. 46+00

SCALE: AS SHOWN
DATE ISSUED: 4/25/2014
DRAWING NO. PR-5
SHEET NO. 75 OF 112

mek
I:\MicroStation\Workspace\PLOT\NYSDOT\NYSDOT_SIZE_B.TBL
I:\MicroStation\Workspace\Plot\NYSDOT\NYSDOT_HPLJ5200_B.plt

FILE NAME = I:\Shared\1000\1066005\AS-BUILTS\1066005_pro_05.dgn
DATE = 4/25/2014
TIME = 10:39:49 AM

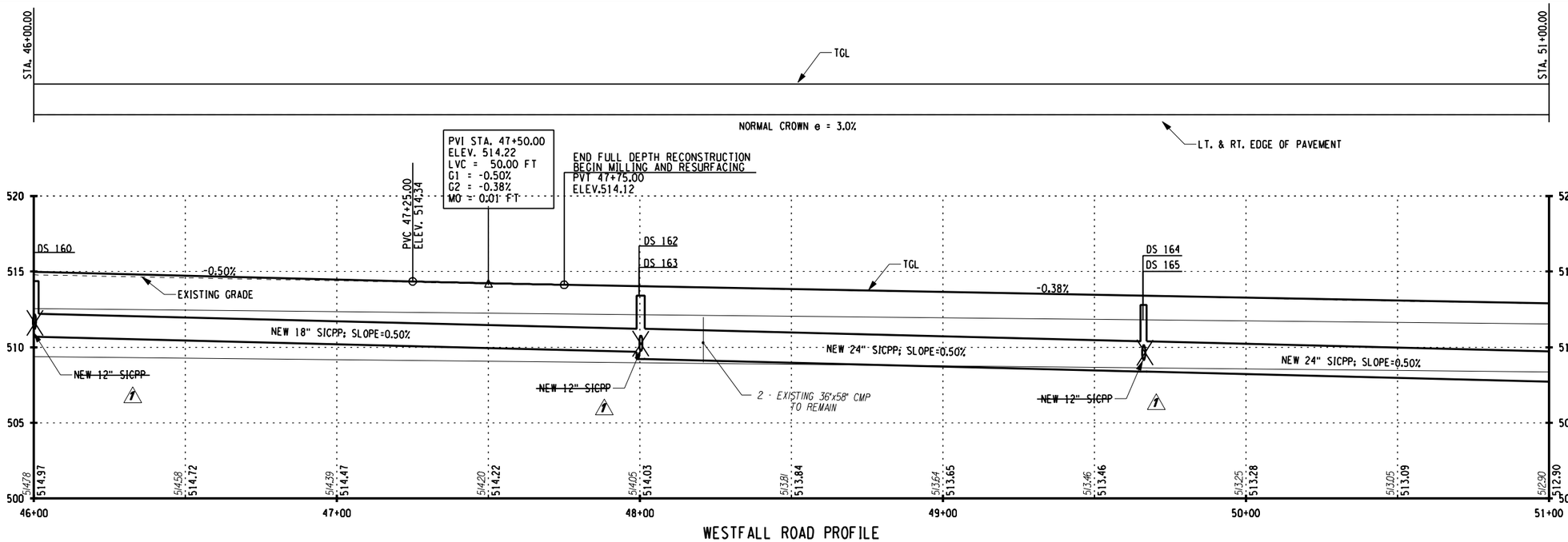

WESTFALL ROAD PROFILE

"SEE SHEET 76B FOR ADDITIONAL PROFILE"

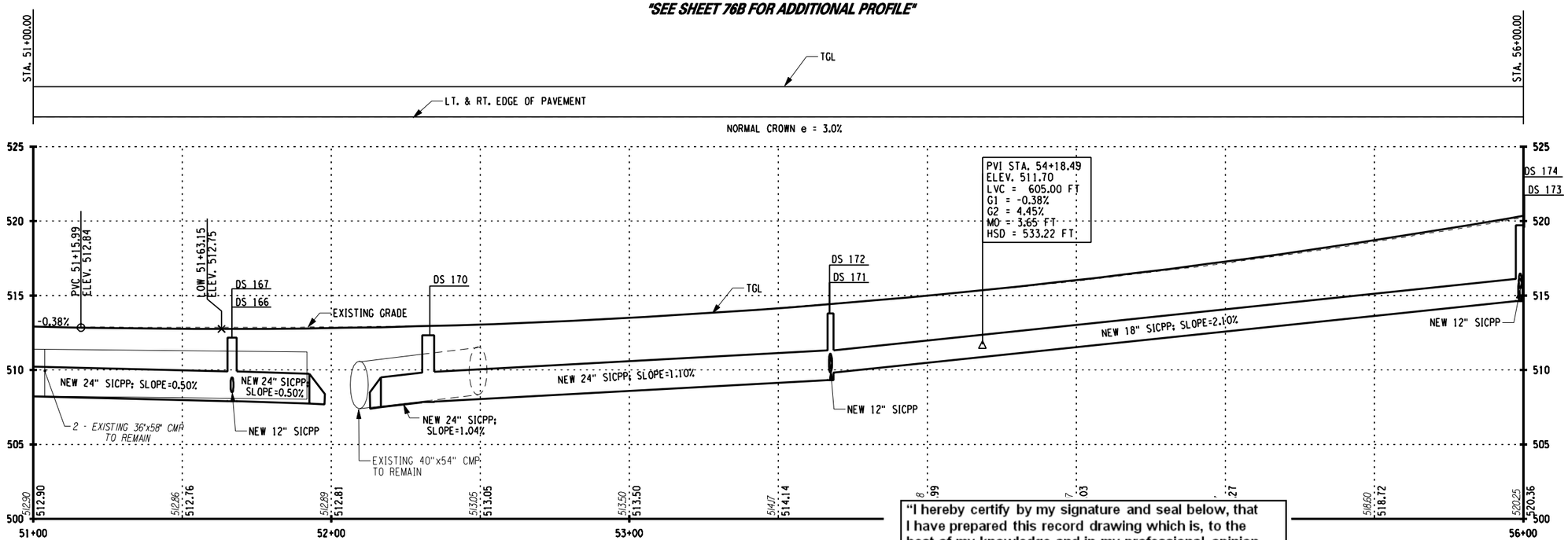

WESTFALL ROAD PROFILE

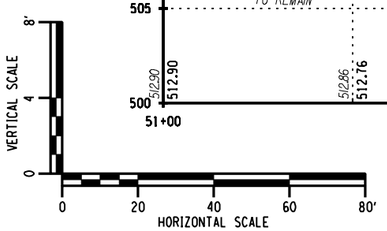

"I hereby certify by my signature and seal below, that I have prepared this record drawing which is, to the best of my knowledge and in my professional opinion, a true representation of the work as constructed on the Westfall Road Improvements Phase III, Project No. 1409."

STATE OF NEW YORK · MATTHEW J. SCANLON · LICENSED PROFESSIONAL ENGINEER · No. 069983

SEWER LEGEND

- PROPOSED SEWER, RIGHT OF HCL
- PROPOSED SEWER, LEFT OF HCL
- EXISTING SEWER, RIGHT OF HCL
- EXISTING SEWER, LEFT OF HCL

NO.	DATE	BY:	REVISION
1	10/17	JMW	STORM DRAIN REVISED SEE PL-9 SEE SHEET 76B REVISED PROFILE

Barton & Loguidice, P.C.

DRAFTED BY: JMW/JJB

DESIGN BY: JMW

DEPARTMENT OF TRANSPORTATION
50 WEST MAIN STREET, SUITE 6100
ROCHESTER, NEW YORK 14614-1231

UNAUTHORIZED ALTERATION OR ADDITION TO THIS DRAWING IS A VIOLATION OF THE NEW YORK STATE EDUCATION LAW ARTICLE 145, SECTION 7209

PROJECT NAME: WESTFALL ROAD
LIMITS: E. HENRIETTA ROAD TO LAC-DE-VILLE BLVD
TOWN: BRIGHTON
CITY: ROCHESTER
CAPITAL PROJECT NO.: 4753.77
BRIDGE IDENTIFICATION NO.: N.A.

MAINLINE PROFILE
STA. 46+00
TO STA. 56+00

SCALE: AS SHOWN
DATE ISSUED: 4/25/2014
DRAWING NO. PR-6
SHEET NO. 76 OF 112

mek
I:\MicroStation\Workspace\PLOT\NYSDOT\NYSDOT_SIZE_B.TBL
I:\MicroStation\Workspace\Plot\NYSDOT\NYSDOT_HPLJ5200_B.plt

FILE NAME = I:\Shared\1000\1066005\AS-BUILTS\1066005_pro_06.dgn
DATE = 4/25/2014
TIME = 10:40:13 AM

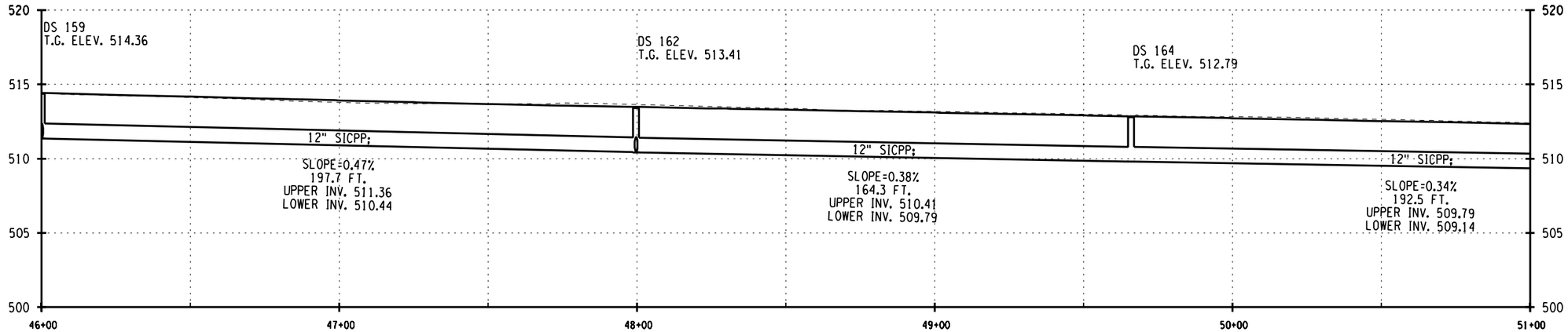

DRAINAGE PROFILE

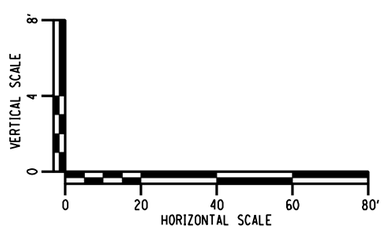

"I hereby certify by my signature and seal below, that I have prepared this record drawing which is, to the best of my knowledge and in my professional opinion, a true representation of the work as constructed on the Westfall Road Improvements Phase III, Project No. 1409."

STATE OF NEW YORK · MATTHEW J. SCANLEN · No. 069982 · LICENSED PROFESSIONAL ENGINEER

SEWER LEGEND

- PROPOSED SEWER, RIGHT OF HCL
- PROPOSED SEWER, LEFT OF HCL
- EXISTING SEWER, RIGHT OF HCL
- EXISTING SEWER, LEFT OF HCL

NO.	DATE	BY:	REVISION
1	10/17	JMW	REVISED PROFILE

Barton & Loguidice, P.C.

DRAFTED BY: JMW/JJB

DESIGN BY: JMW

DEPARTMENT OF TRANSPORTATION
50 WEST MAIN STREET, SUITE 6100
ROCHESTER, NEW YORK 14614-1231

UNAUTHORIZED ALTERATION OR ADDITION TO THIS DRAWING IS A VIOLATION OF THE NEW YORK STATE EDUCATION LAW ARTICLE 145, SECTION 7209

PROJECT NAME: WESTFALL ROAD

LIMITS: E. HENRIETTA ROAD TO LAC-DE-VILLE BLVD

TOWN: BRIGHTON

CITY: ROCHESTER

CAPITAL PROJECT NO.: 4753.77

BRIDGE IDENTIFICATION NO.: N.A.

MAINLINE PROFILE
STA. 46+00
TO STA. 56+00

SCALE: AS SHOWN

DATE ISSUED: 4/25/2014

DRAWING NO. PR-6B

SHEET NO. 76B OF 112

FILE NAME = I:\Shared\1000\1066005\AS-BUILTS\1066005_pro_06B_76B.dgn
DATE = 4/25/2014
TIME = 10:40:53 AM

mek
I:\MicroStation\Workspace\PLOT\NYSDOT\NYSDOT_SIZE_B.TBL
I:\MicroStation\Workspace\Plot\NYSDOT\NYSDOT_HPLJ5200_B.plt

mek
I:\MicroStation\Workspace\PLOT\NYSDOT\NYSDOT_SIZE_B.TBL
I:\MicroStation\Workspace\Plot\NYSDOT\NYSDOT_HPLJ5200_B.plt

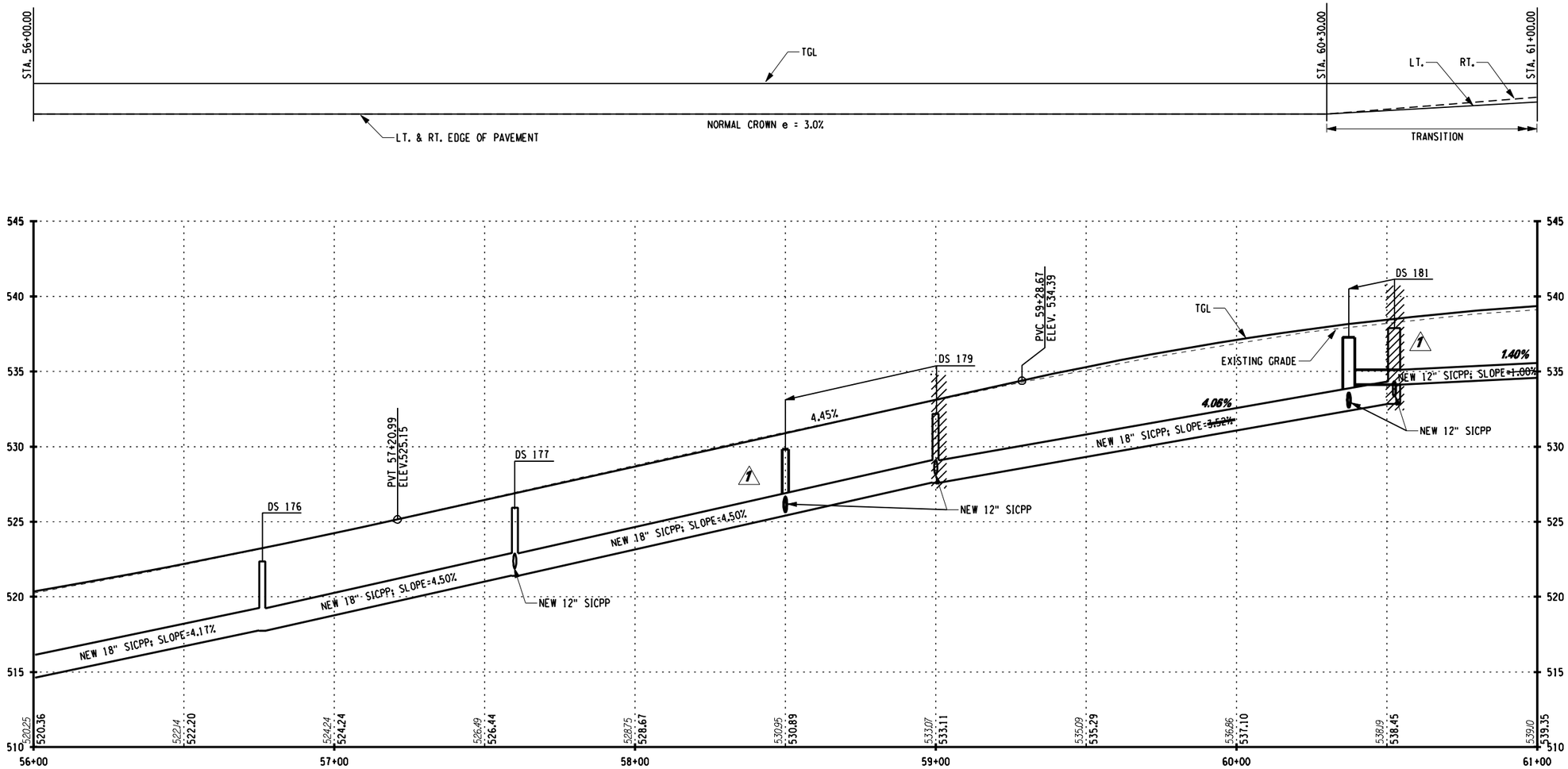

WESTFALL ROAD PROFILE

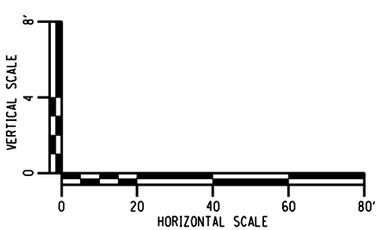

"I hereby certify by my signature and seal below, that I have prepared this record drawing which is, to the best of my knowledge and in my professional opinion, a true representation of the work as constructed on the Westfall Road Improvements Phase III, Project No. 1409."

STATE OF NEW YORK · MATTHEW J. SCANDALE · No. 069983 · LICENSED PROFESSIONAL ENGINEER

SEWER LEGEND

- PROPOSED SEWER, RIGHT OF HCL
- PROPOSED SEWER, LEFT OF HCL
- EXISTING SEWER, RIGHT OF HCL
- EXISTING SEWER, LEFT OF HCL

NO.	DATE	BY:	REVISION
1	10/17	JJMW	REVISED DS LOCATIONS

Barton & Loguidice, P.C.

DRAFTED BY: JMW/JJB
DESIGN BY: JMW

DEPARTMENT OF TRANSPORTATION
50 WEST MAIN STREET, SUITE 6100
ROCHESTER, NEW YORK 14614-1231

UNAUTHORIZED ALTERATION OR ADDITION TO THIS DRAWING IS A VIOLATION OF THE NEW YORK STATE EDUCATION LAW ARTICLE 145, SECTION 7209

PROJECT NAME: WESTFALL ROAD
LIMITS: E. HENRIETTA ROAD TO LAC-DE-VILLE BLVD
TOWN: BRIGHTON
CITY: ROCHESTER
CAPITAL PROJECT NO.: 4753.77
BRIDGE IDENTIFICATION NO.: N.A.

MAINLINE PROFILE
STA. 56+00
TO STA. 61+00

SCALE: AS SHOWN
DATE ISSUED: 4/25/2014
DRAWING NO. PR-7
SHEET NO. 77 OF 112

FILE NAME = I:\Shared\1000\1066005\AS-BUILTS\1066005_pro_07.dgn
DATE = 4/25/2014
TIME = 10:41:26 AM

mek
I:\MicroStation\Workspace\PLOT\NYSDOT\NYSDOT_SIZE_B.TBL
I:\MicroStation\Workspace\Plot\NYSDOT\NYSDOT_HPLJ5200_B.plt

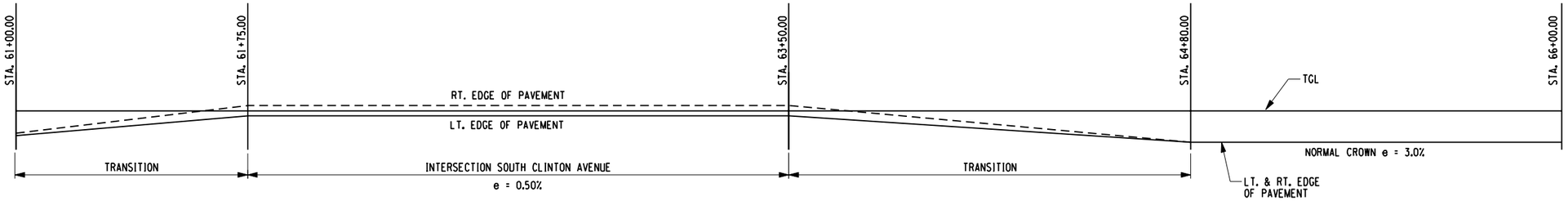

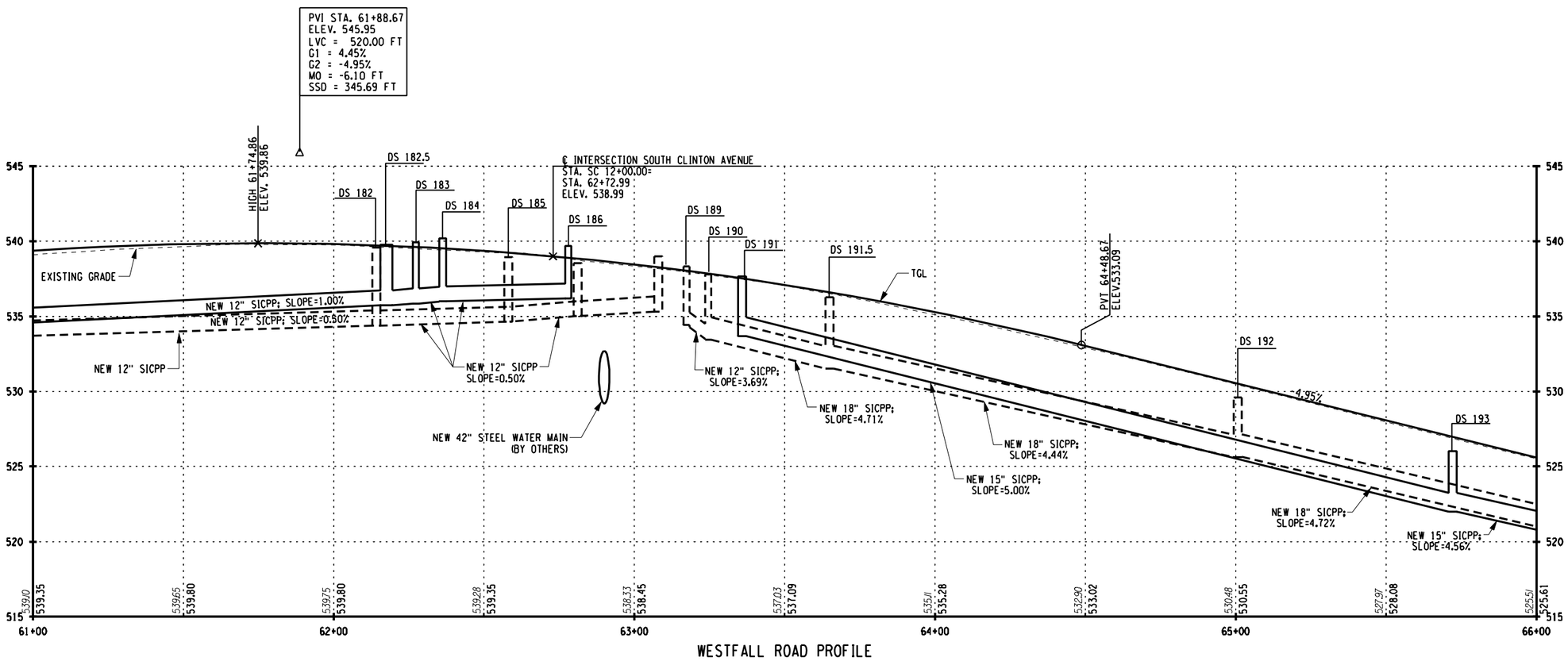

WESTFALL ROAD PROFILE

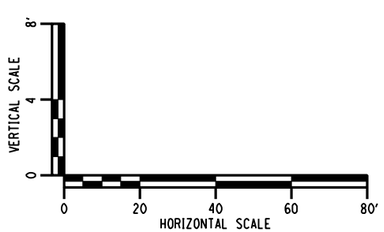

"I hereby certify by my signature and seal below, that I have prepared this record drawing which is, to the best of my knowledge and in my professional opinion, a true representation of the work as constructed on the Westfall Road Improvements Phase III, Project No. 1409."

STATE OF NEW YORK · MATTHEW J. SCHOLER · No. 059983 · LICENSED PROFESSIONAL ENGINEER

"SEE SHEET 78B FOR ADDITIONAL PROFILES"

SEWER LEGEND

- PROPOSED SEWER, RIGHT OF HCL
- PROPOSED SEWER, LEFT OF HCL
- EXISTING SEWER, RIGHT OF HCL
- EXISTING SEWER, LEFT OF HCL

NO.	DATE	BY:	REVISION
1	10/1/13	JMW	SEE SHEET 78B REVISED PROFILE

Barton & Loguidice, P.C.

DRAFTED BY: JMW/JJB
DESIGN BY: JMW

DEPARTMENT OF TRANSPORTATION
50 WEST MAIN STREET, SUITE 6100
ROCHESTER, NEW YORK 14614-1231

UNAUTHORIZED ALTERATION OR ADDITION TO THIS DRAWING IS A VIOLATION OF THE NEW YORK STATE EDUCATION LAW ARTICLE 145, SECTION 7209

PROJECT NAME: WESTFALL ROAD
LIMITS: E. HENRIETTA ROAD TO LAC-DE-VILLE BLVD
TOWN: BRIGHTON
CITY: ROCHESTER
CAPITAL PROJECT NO.: 4753.77
BRIDGE IDENTIFICATION NO.: N.A.

MAINLINE PROFILE
STA. 61+00
TO STA. 66+00

SCALE: AS SHOWN
DATE ISSUED: 4/25/2014
DRAWING NO. PR-8
SHEET NO. 78 OF 112

FILE NAME = I:\Shared\1000\1066005\AS-BUILTS\1066005_pro_08.dgn
DATE = 4/25/2014
TIME = 10:42:17 AM

"I hereby certify by my signature and seal below, that I have prepared this record drawing which is, to the best of my knowledge and in my professional opinion, a true representation of the work as constructed on the Westfall Road Improvements Phase III, Project No. 1409."

STATE OF NEW YORK · MATTHEW J. SCHOLEY · LICENSED PROFESSIONAL ENGINEER · NO. 069983

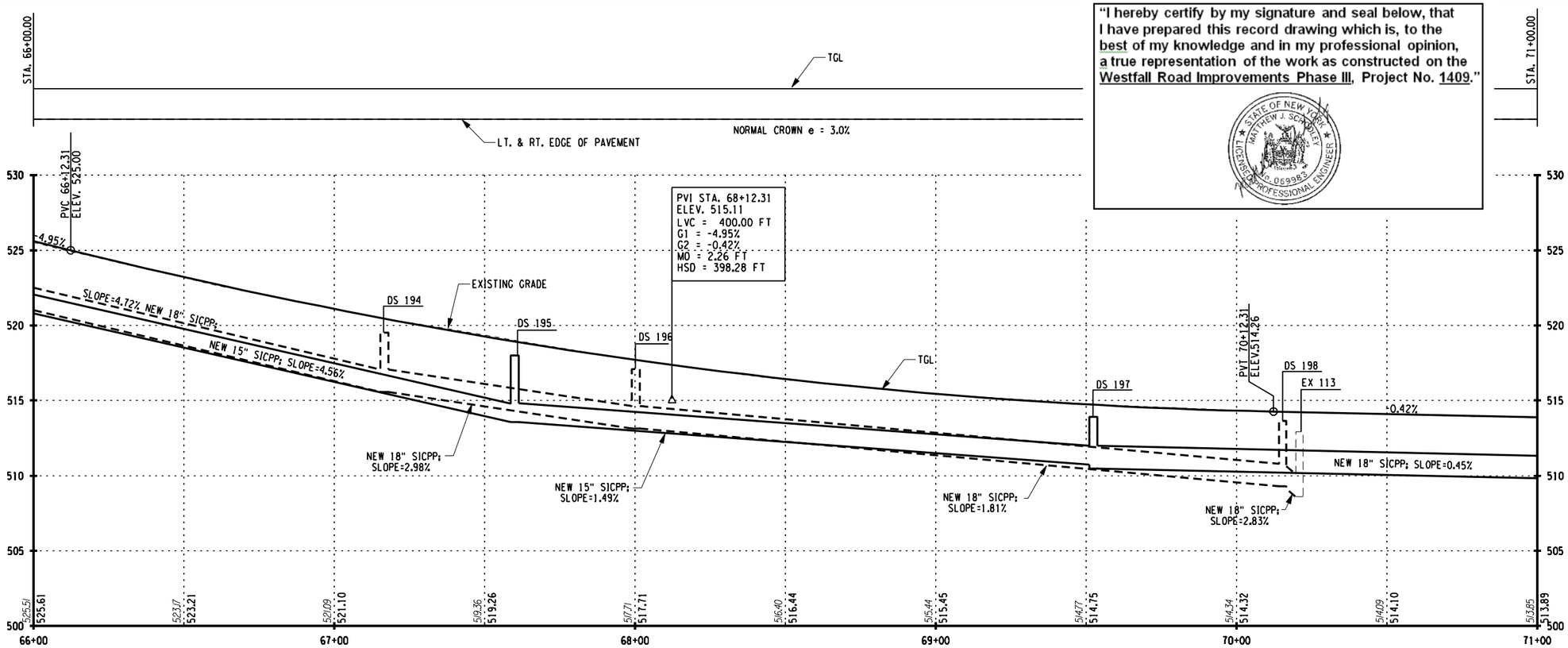

"SEE SHEET 79B FOR ADDITIONAL PROFILES"

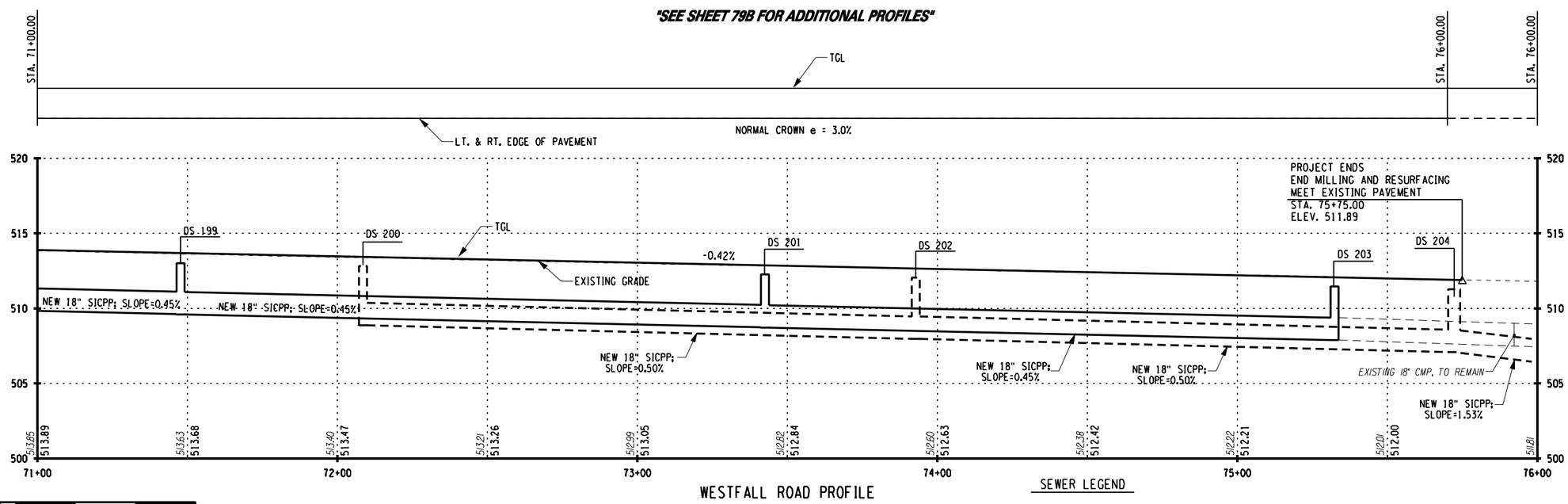

VERTICAL SCALE 0 4 8'

HORIZONTAL SCALE 0 20 40 60 80'

SEWER LEGEND

- PROPOSED SEWER, RIGHT OF HCL
- PROPOSED SEWER, LEFT OF HCL
- EXISTING SEWER, RIGHT OF HCL
- EXISTING SEWER, LEFT OF HCL

NO AS-BUILT REVISIONS

NO.	DATE	BY:	REVISION

Barton & Loguidice, P.C.

DRAFTED BY: JMW/JJB

DESIGN BY: JMW

DEPARTMENT OF TRANSPORTATION
50 WEST MAIN STREET, SUITE 6100
ROCHESTER, NEW YORK 14614-1231

UNAUTHORIZED ALTERATION OR ADDITION TO THIS DRAWING IS A VIOLATION OF THE NEW YORK STATE EDUCATION LAW ARTICLE 145, SECTION 7209

PROJECT NAME: WESTFALL ROAD
LIMITS: E. HENRIETTA ROAD TO LAC-DE-VILLE BLVD
TOWN: BRIGHTON
CITY: ROCHESTER
CAPITAL PROJECT NO.: 4753.77
BRIDGE IDENTIFICATION NO.: N.A.

MAINLINE PROFILE
STA. 66+00
TO STA. 76+00

SCALE: AS SHOWN
DATE ISSUED: 4/25/2014
DRAWING NO. PR-9
SHEET NO. 79 OF 112

mek
I:\MicroStation\Workspace\PLOT\NYSDOT\NYSDOT_SIZE_B.TBL
I:\MicroStation\Workspace\Plot\NYSDOT\NYSDOT_HPLJ5200_B.plt

FILE NAME = I:\Shared\1000\1066005\AS-BUILTS\1066005_pro_09.dgn
DATE = 4/25/2014
TIME = 10:43:12 AM

mek
I:\MicroStation\Workspace\PLOT\NYSDOT\NYSDOT_SIZE_B.TBL
I:\MicroStation\Workspace\Plot\NYSDOT\NYSDOT_HPLJ5200_B.plt

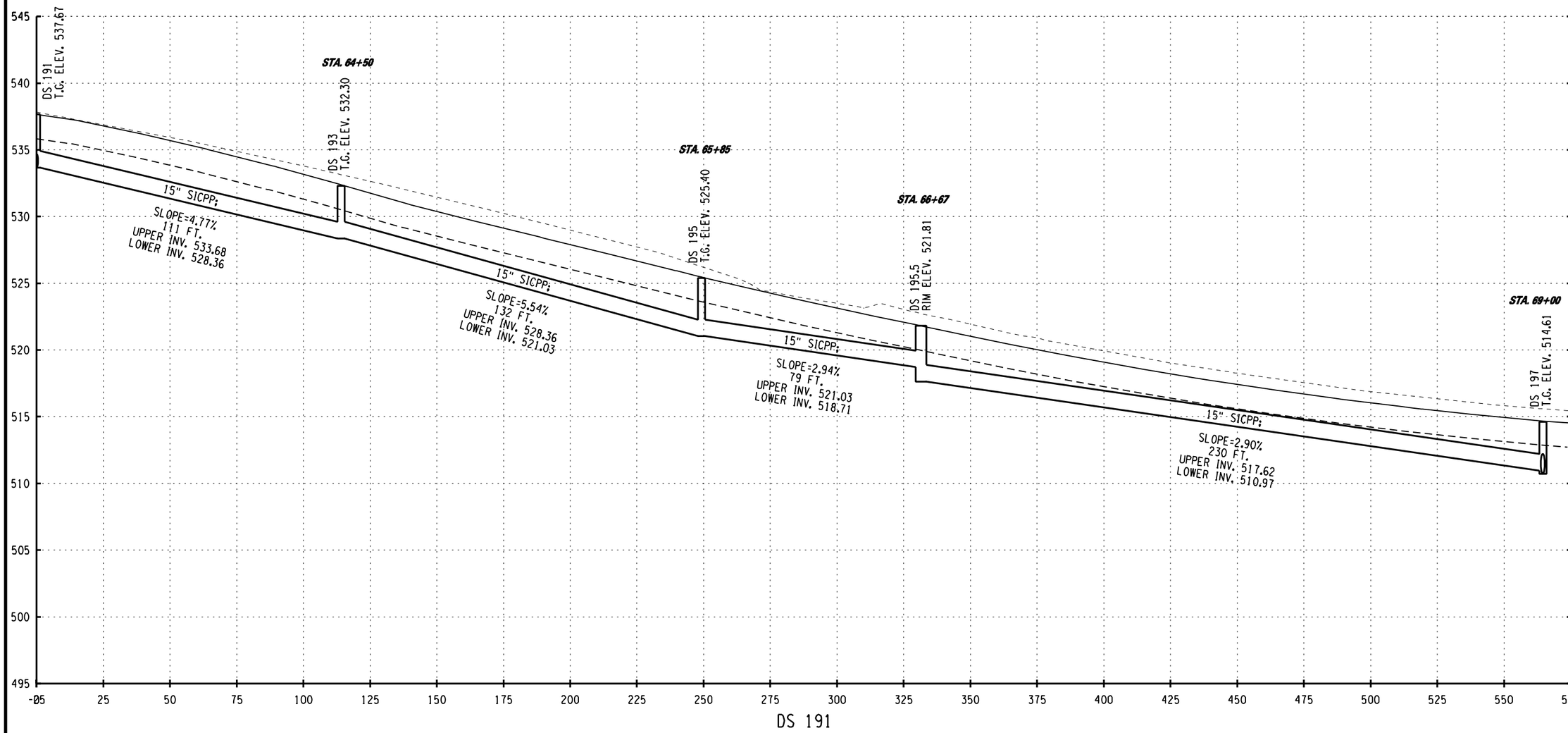

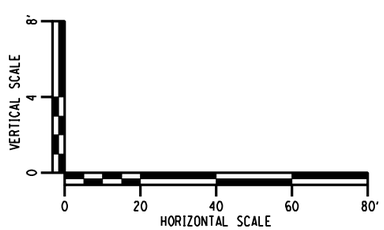

"I hereby certify by my signature and seal below, that I have prepared this record drawing which is, to the best of my knowledge and in my professional opinion, a true representation of the work as constructed on the Westfall Road Improvements Phase III, Project No. 1409."

STATE OF NEW YORK · MATTHEW J. SCHADLEY · LICENSED PROFESSIONAL ENGINEER · No. 069988

SEWER LEGEND

PROPOSED SEWER, RIGHT OF HCL	EXISTING SEWER, RIGHT OF HCL
PROPOSED SEWER, LEFT OF HCL	EXISTING SEWER, LEFT OF HCL

NO.	DATE	BY:	REVISION
1	10/4/12	JMW	REVISED PROFILES

Barton & Loguidice, P.C.

DRAFTED BY: JMW/JJB
DESIGN BY: JMW

DEPARTMENT OF TRANSPORTATION
50 WEST MAIN STREET, SUITE 6100
ROCHESTER, NEW YORK 14614-1231

UNAUTHORIZED ALTERATION OR ADDITION TO THIS DRAWING IS A VIOLATION OF THE NEW YORK STATE EDUCATION LAW ARTICLE 145, SECTION 7209

PROJECT NAME: WESTFALL ROAD
LIMITS: E. HENRIETTA ROAD TO LAC-DE-VILLE BLVD
TOWN: BRIGHTON
CITY: ROCHESTER
CAPITAL PROJECT NO.: 4753.77
BRIDGE IDENTIFICATION NO.: N.A.

MAINLINE PROFILE
STA. 66+00
TO STA. 76+00

SCALE: AS SHOWN
DATE ISSUED: 4/25/2014
DRAWING NO. PR-9B
SHEET NO. 79B OF 112

FILE NAME = I:\Shared\1000\1066005\AS-BUILTS\1066005_pro_09B_79B.dgn
DATE = 4/25/2014
TIME = 10:43:48 AM

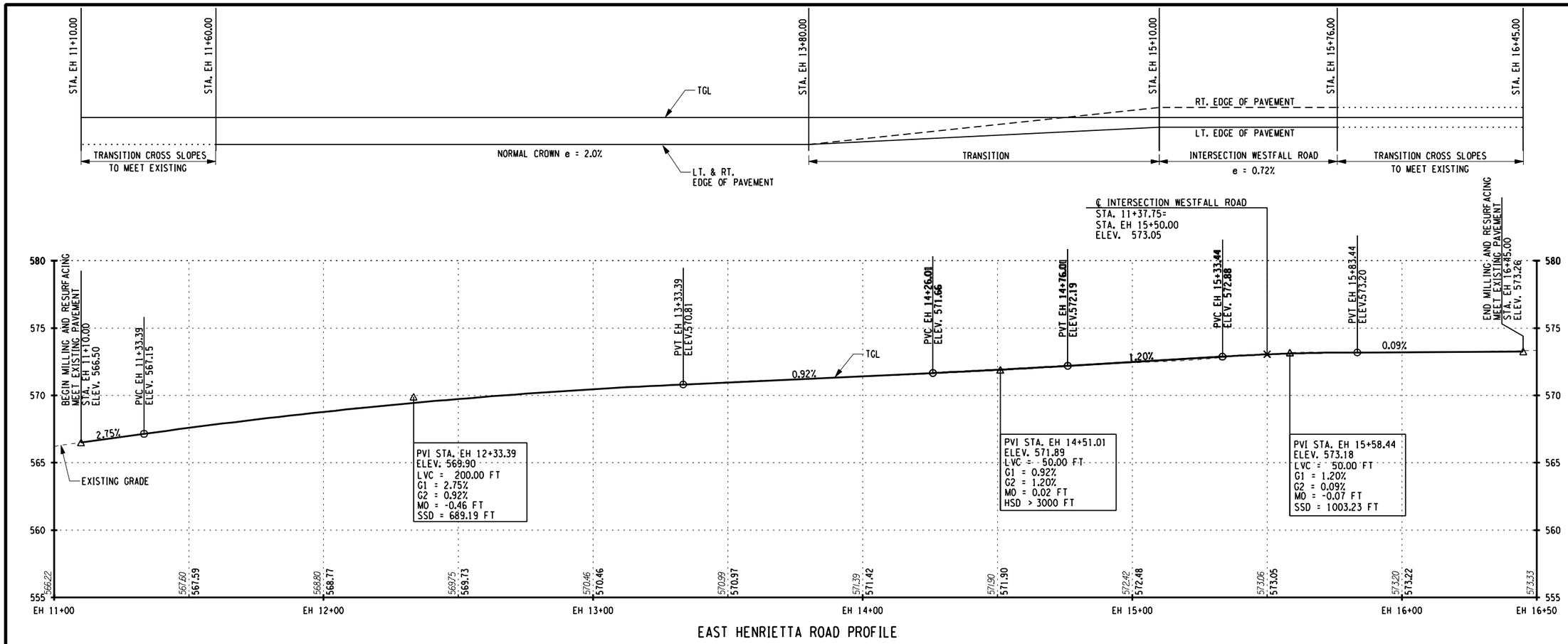

EAST HENRIETTA ROAD PROFILE

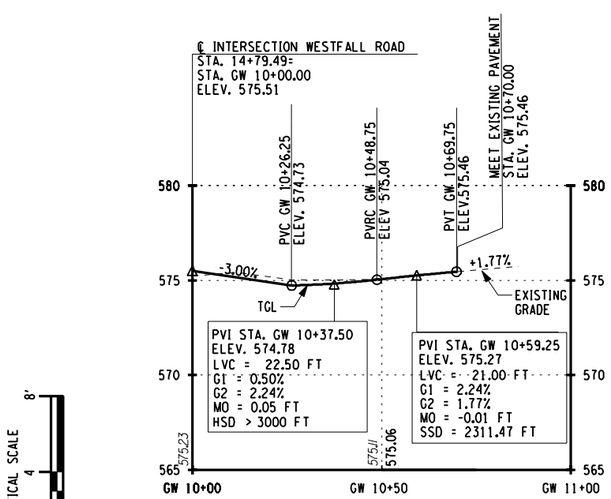

GREEN KNOLLS DRIVE (WEST) PROFILE

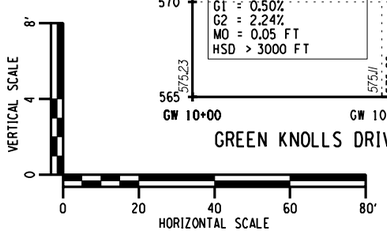

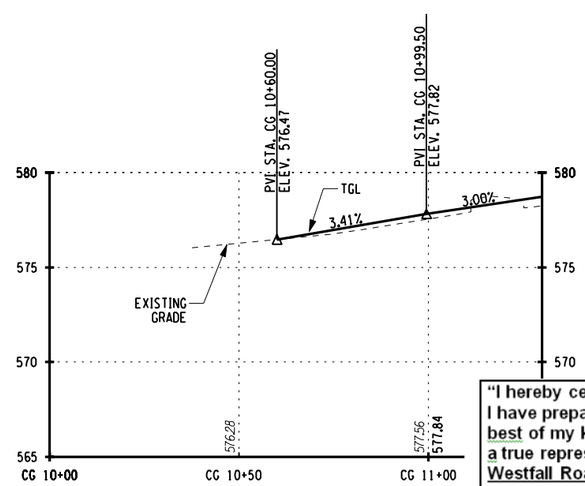

COSTELLO DEVELOPMENT PROFILE

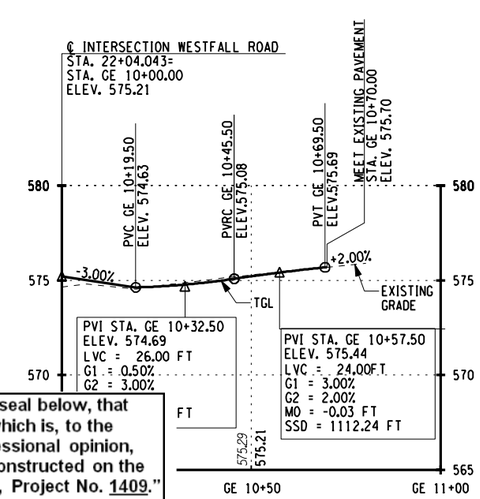

OLLS DRIVE (EAST) PROFILE

"I hereby certify by my signature and seal below, that I have prepared this record drawing which is, to the best of my knowledge and in my professional opinion, a true representation of the work as constructed on the Westfall Road Improvements Phase III, Project No. 1409."

STATE OF NEW YORK · MATTHEW J. SCHOLLEY · 069983 · LICENSED PROFESSIONAL ENGINEER

NO AS-BUILT REVISIONS

NO.	DATE	BY:	REVISION

Barton & Loguidice, P.C.

DRAFTED BY: JMW/JJB
DESIGN BY: JMW

DEPARTMENT OF TRANSPORTATION
50 WEST MAIN STREET, SUITE 6100
ROCHESTER, NEW YORK 14614-1231

UNAUTHORIZED ALTERATION OR ADDITION TO THIS DRAWING IS A VIOLATION OF THE NEW YORK STATE EDUCATION LAW ARTICLE 145, SECTION 7209

PROJECT NAME: WESTFALL ROAD
LIMITS: E. HENRIETTA ROAD TO LAC-DE-VILLE BLVD
TOWN: BRIGHTON
CITY: ROCHESTER
CAPITAL PROJECT NO.: 4753.77
BRIDGE IDENTIFICATION NO.: N.A.

SIDE ROAD PROFILES

SCALE: AS SHOWN
DATE ISSUED: 4/25/2014
DRAWING NO. PR-10
SHEET NO. 80 OF 112

mek
I:\MicroStation\Workspace\PLOT\NYSDOT\NYSDOT_SIZE_B.TBL
I:\MicroStation\Workspace\Plot\NYSDOT\NYSDOT_HPLJ5200_B.plt

FILE NAME = I:\Shared\1000\1066005\AS-BUILTS\1066005_pro_10.dgn
DATE = 4/25/2014
TIME = 10:44:14 AM

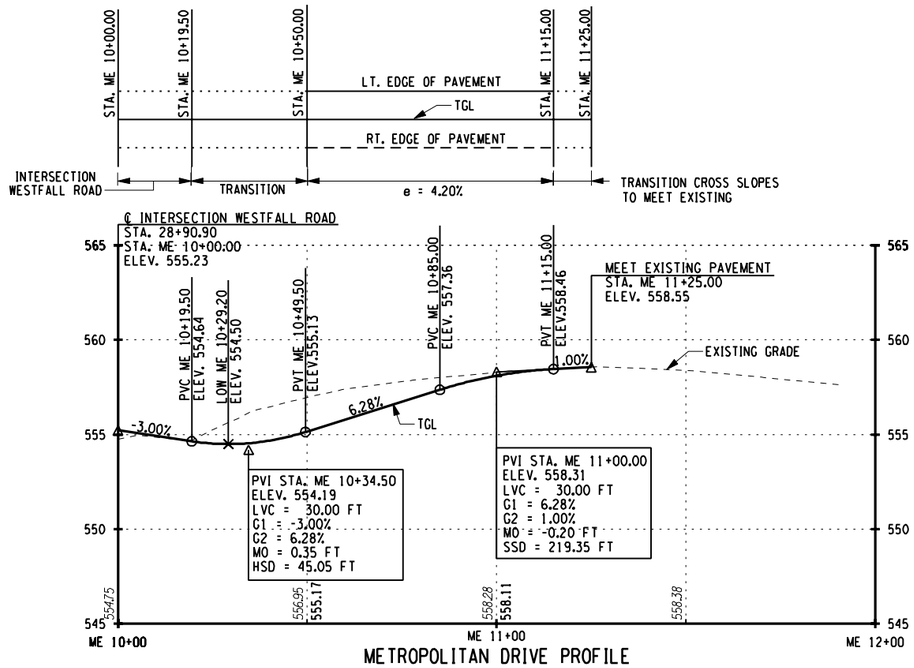

METROPOLITAN DRIVE PROFILE

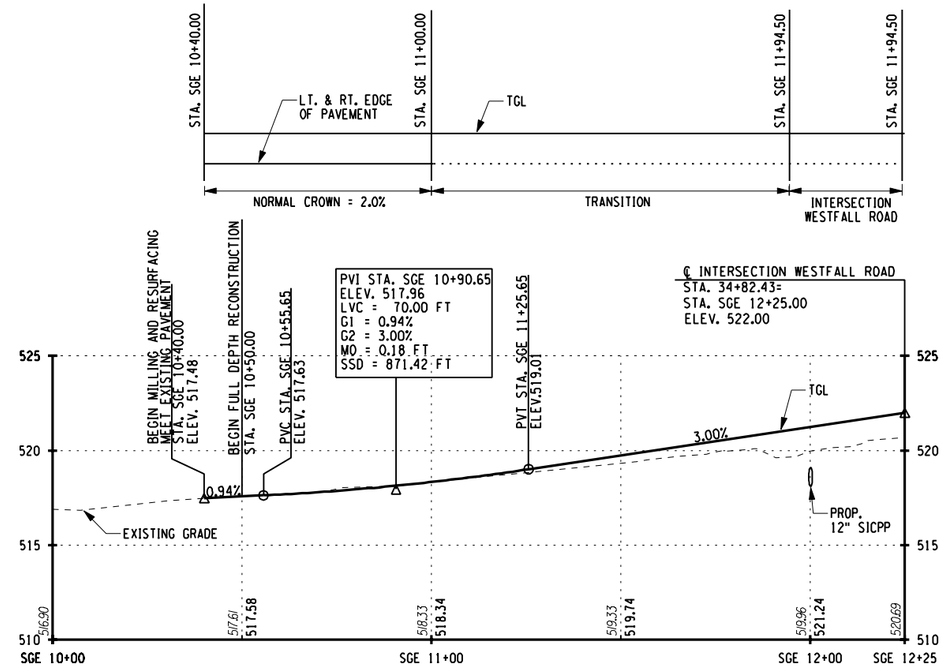

SAWGRASS DRIVE EXTENSION PROFILE

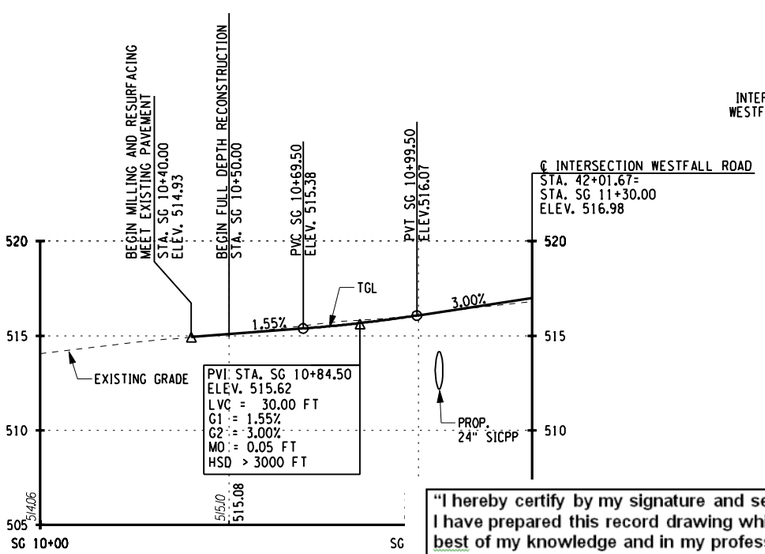

SAWGRASS DRIVE PROFILE

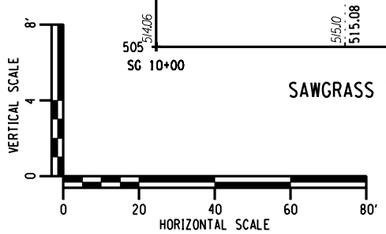

"I hereby certify by my signature and seal below, that I have prepared this record drawing which is, to the best of my knowledge and in my professional opinion, a true representation of the work as constructed on the Westfall Road Improvements Phase III, Project No. 1409."

STATE OF NEW YORK · MATTHEW J. SCANLON · LICENSED PROFESSIONAL ENGINEER · No. 089983

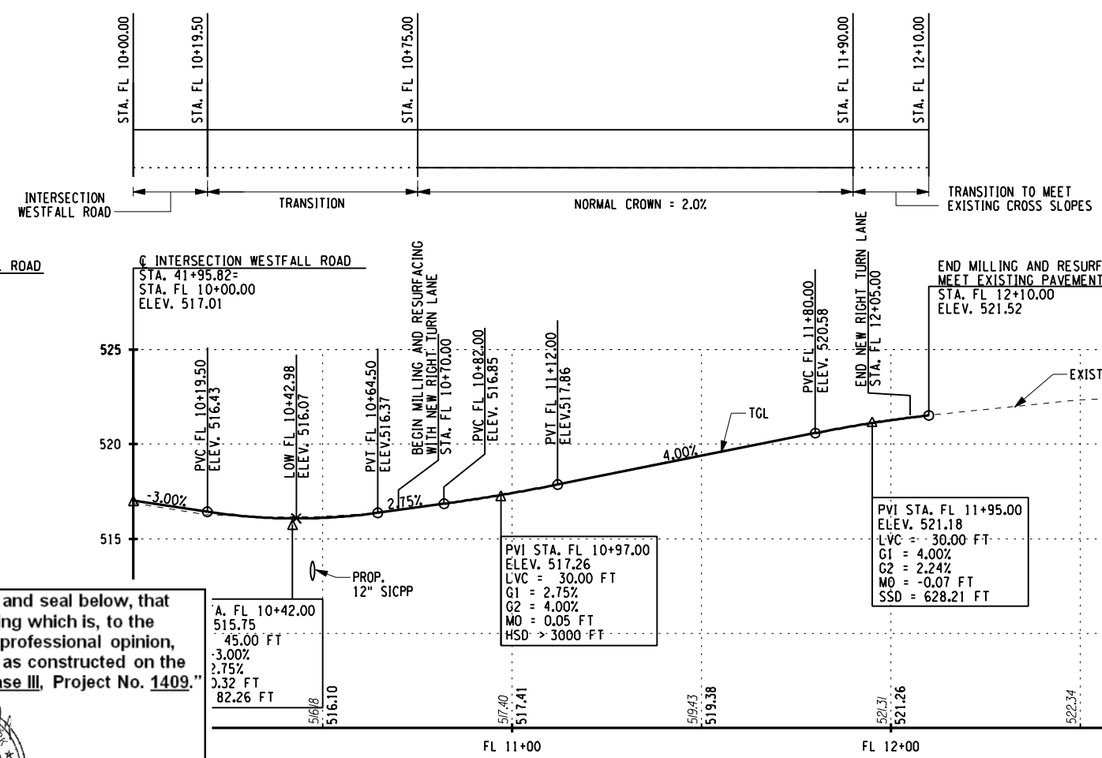

FINGER LAKES DDSO DRIVEWAY PROFILE

NO AS-BUILT REVISIONS

NO.	DATE	BY:	REVISION

Barton & Loguidice, P.C.

DRAFTED BY: JMW/JJB

DESIGN BY: JMW

DEPARTMENT OF TRANSPORTATION
50 WEST MAIN STREET, SUITE 6100
ROCHESTER, NEW YORK 14614-1231

UNAUTHORIZED ALTERATION OR ADDITION TO THIS DRAWING IS A VIOLATION OF THE NEW YORK STATE EDUCATION LAW ARTICLE 145, SECTION 7209

PROJECT NAME: WESTFALL ROAD
LIMITS: E. HENRIETTA ROAD TO LAC-DE-VILLE BLVD
TOWN: BRIGHTON
CITY: ROCHESTER
CAPITAL PROJECT NO.: 4753.77
BRIDGE IDENTIFICATION NO.: N.A.

SIDE ROAD PROFILES

SCALE: AS SHOWN
DATE ISSUED: 4/25/2014
DRAWING NO. PR-11
SHEET NO. 81 OF 112

mek
I:\MicroStation\Workspace\PLOT\NYSDOT\NYSDOT_SIZE_B.TBL
I:\MicroStation\Workspace\Plot\NYSDOT\NYSDOT_HPLJ5200_B.plt

FILE NAME = I:\Shared\1000\1066005\AS-BUILTS\1066005_pro.11.dgn
DATE = 4/25/2014
TIME = 10:44:42 AM

"I hereby certify by my signature and seal below, that I have prepared this record drawing which is, to the best of my knowledge and in my professional opinion, a true representation of the work as constructed on the Westfall Road Improvements Phase III, Project No. 1409."

STATE OF NEW YORK · MATTHEW J. SCHOLTZ · NO. 069983 · LICENSED PROFESSIONAL ENGINEER

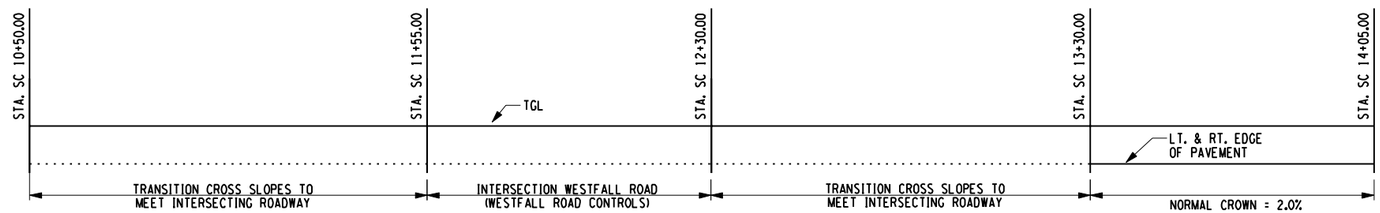

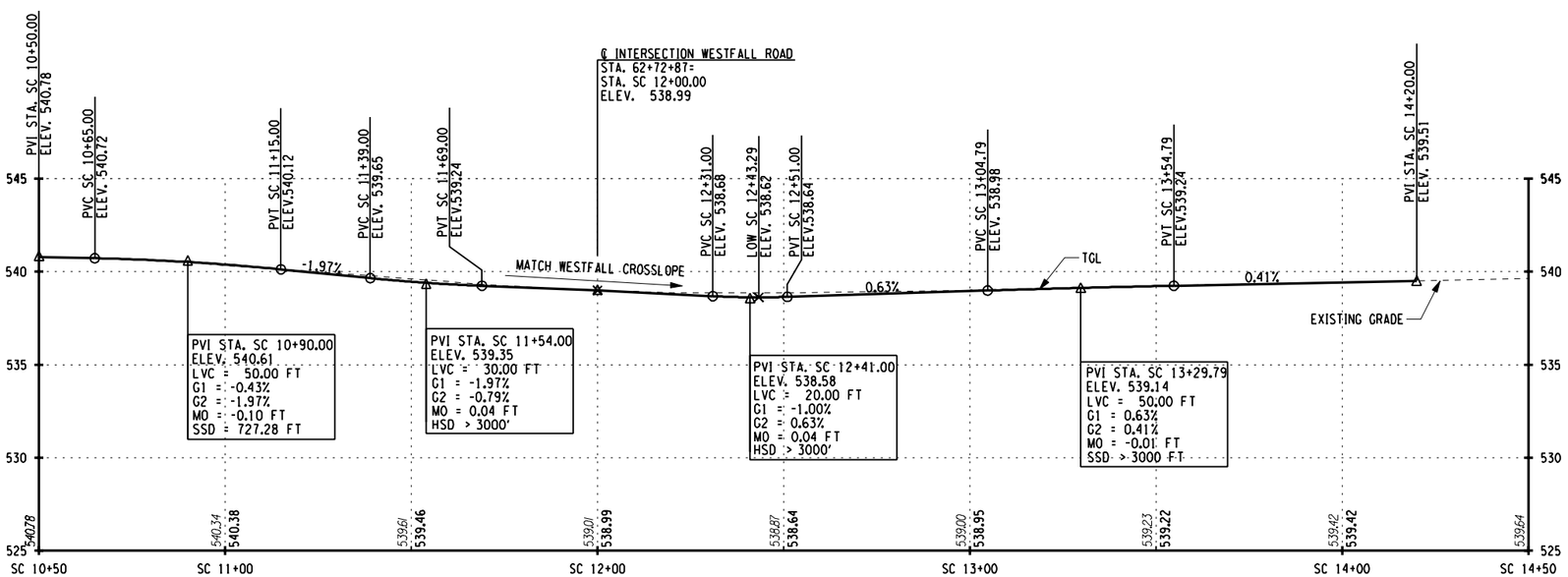

SOUTH CLINTON AVENUE PROFILE

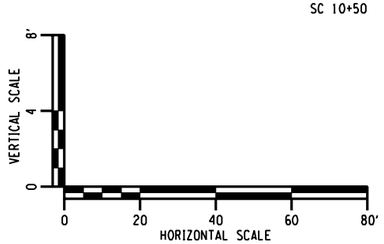

NO.	DATE	BY:	REVISION

NO AS-BUILT REVISIONS

Barton & Loguidice, P.C.

DRAFTED BY: JMW/JJB

DESIGN BY: JMW

DEPARTMENT OF TRANSPORTATION
50 WEST MAIN STREET, SUITE 6100
ROCHESTER, NEW YORK 14614-1231

UNAUTHORIZED ALTERATION OR ADDITION TO THIS DRAWING IS A VIOLATION OF THE NEW YORK STATE EDUCATION LAW ARTICLE 145, SECTION 7209

PROJECT NAME: WESTFALL ROAD
LIMITS: E. HENRIETTA ROAD TO LAC-DE-VILLE BLVD
TOWN: BRIGHTON
CITY: ROCHESTER
CAPITAL PROJECT NO.: 4753.77
BRIDGE IDENTIFICATION NO.: N.A.

SIDE ROAD PROFILES

SCALE: AS SHOWN
DATE ISSUED: 4/25/2014
DRAWING NO. PR-12
SHEET NO. 82 OF 112

mek
I:\MicroStation\Workspace\PLOT\NYSDOT\NYSDOT_SIZE_B.TBL
I:\MicroStation\Workspace\Plot\NYSDOT\NYSDOT_HPLJ5200_B.plt

FILE NAME = I:\Shared\1000\1066005\AS-BUILTS\1066005_pro.12.dgn
DATE = 4/25/2014
TIME = 10:45:06 AM

mek
I:\MicroStation\Workspace\PLOT\NYSDOT\NYSDOT_SIZE_B.TBL
I:\MicroStation\Workspace\Plot\NYSDOT\NYSDOT_HPLJ5200_B.plt

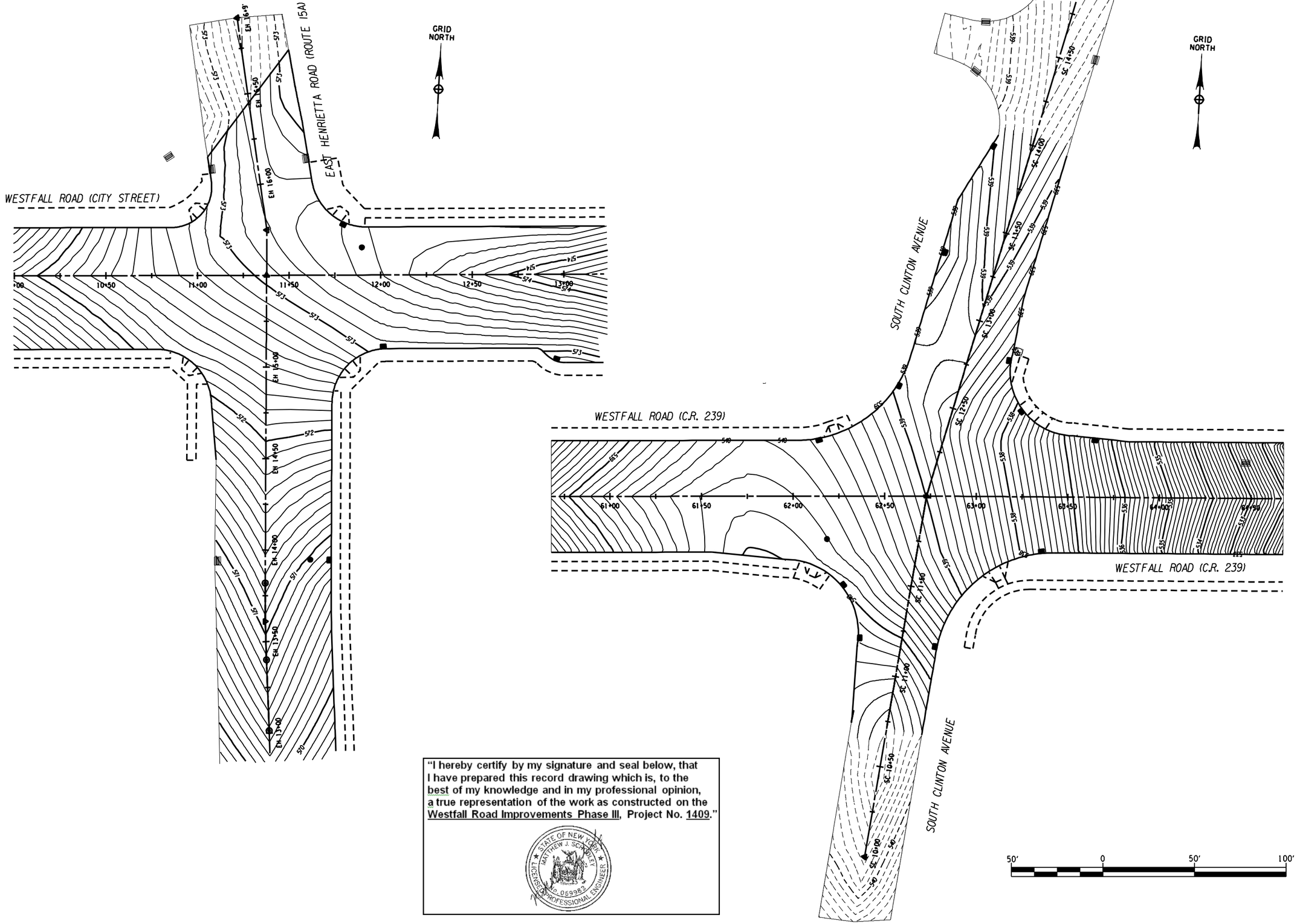

"I hereby certify by my signature and seal below, that I have prepared this record drawing which is, to the best of my knowledge and in my professional opinion, a true representation of the work as constructed on the Westfall Road Improvements Phase III, Project No. 1409."

STATE OF NEW YORK · MATTHEW J. SCHOLEY · LICENSED PROFESSIONAL ENGINEER · No. 069983

FILE NAME = I:\Shared\1000\1066005\AS-BUILTS\1066005_ig_01.dgn
DATE = 4/25/2014
TIME = 10:45:55 AM

NO AS-BUILT REVISIONS

NO.	DATE	BY:	REVISION

Barton & Loguidice, P.C.

DESIGN BY: JMW
DRAFTED BY: JMW/JJB

DEPARTMENT OF TRANSPORTATION
50 WEST MAIN STREET, SUITE 6100
ROCHESTER, NEW YORK 14614-1231

UNAUTHORIZED ALTERATION OR ADDITION TO THIS DRAWING IS A VIOLATION OF THE NEW YORK STATE EDUCATION LAW ARTICLE 145, SECTION 7209

PROJECT NAME: WESTFALL ROAD
LIMITS: E. HENRIETTA ROAD TO LAC-DE-VILLE BLVD
TOWN: BRIGHTON
CITY: ROCHESTER
CAPITAL PROJECT NO.: 4753.77
BRIDGE IDENTIFICATION NO.: N.A.

INTERSECTION GRADING PLAN

SCALE: AS SHOWN
DATE ISSUED: 4/25/2014
DRAWING NO. IG-1
SHEET NO. 83 OF 112

"I hereby certify by my signature and seal below, that I have prepared this record drawing which is, to the best of my knowledge and in my professional opinion, a true representation of the work as constructed on the Westfall Road Improvements Phase III, Project No. 1409."

STATE OF NEW YORK · MATTHEW J. SCHOLET · No. 059983 · LICENSED PROFESSIONAL ENGINEER

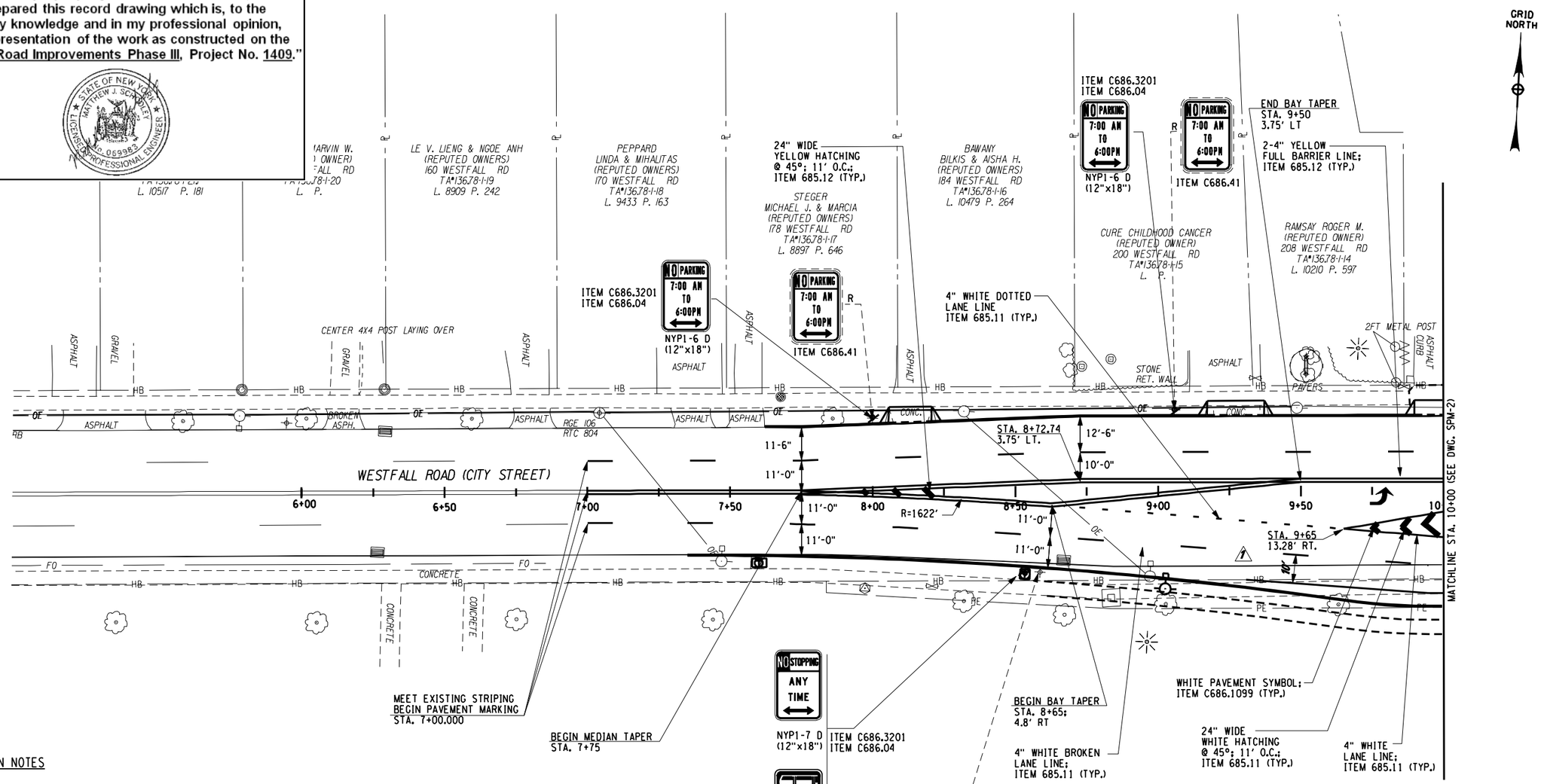

TRAFFIC SIGN NOTES

1. ALL PROJECT RELATED SIGN SLEEVES ARE TO BE CONSTRUCTED IN ACCORDANCE WITH THE LATEST VERSION OF M.C.D.O.T. STANDARD DETAILS AND SPECIFICATIONS.
2. THE CONTRACTOR SHALL MAINTAIN, AT ALL TIMES, ALL EXISTING SIGNS THROUGHOUT THE DURATION OF THE PROJECT UNLESS DIRECTED OTHERWISE BY THE PROJECT ENGINEER.
3. THE SIGN INSTALLERS SHALL USE 12 FT SIGN POSTS WHERE MORE THAN 2 SIGNS ARE TO BE GROUND MOUNTED IN THE SAME LOCATIONS AS SHOWN ON THE PLANS. 10 FT SIGN POSTS SHALL BE USED IN ALL OTHER LOCATIONS OR AS ORDERED BY THE RESIDENT ENGINEER.
4. THE COST TO "GROUND MOUNT" SIGNS TO LIGHT POLES OR TRAFFIC POLES SHALL BE INCLUDED IN THE PRICE BID FOR THE TRAFFIC SIGN ITEMS.
5. ANY MODIFICATIONS TO THE SIGN PLANS SHALL BE APPROVED IN ADVANCE BY THE MONROE COUNTY DEPARTMENT OF TRANSPORTATION.
6. GROUND AND POLE MOUNTED STREET NAME SIGNS SHALL BE MOUNTED BACK TO BACK, TWO PANELS EACH WITH NAME PRINTED ON ONE SIDE.
7. ALL OVERHEAD SIGNS SHALL BE FABRICATED USING ASTM TYPE XI RETROREFLECTIVE SHEETING.
8. ALL GROUND MOUNTED SIGNS SHALL REGULATORY (EXCLUDING PARKING) AND WARNING SIGNS SHALL BE FABRICATED USING ASTM TYPE III OR IX RETROREFLECTIVE SHEETING.
9. ALL SIGNS AND POSTS REMOVED SHALL BECOME THE PROPERTY OF THE MONROE COUNTY DEPARTMENT OF TRANSPORTATION AND SHALL BE AVAILABLE FOR PICK-UP.
10. ALL STREET NAME SIGNS SHALL HAVE THE FOLLOWING BACKGROUND COLOR:
    CITY STREETS - BLUE BACKGROUND
    COUNTY ROADS - GREEN BACKGROUND

LEGEND

SIGN RR	RELOCATE EXISTING SIGN
	EXISTING SIGN
	PROPOSED SIGN
SIGN R	REMOVE EXISTING SIGN
SIGN	EXISTING SIGN TO REMAIN
SIGN	PROPOSED NEW SIGN
MUTCD NO.	

NO.	DATE	BY:	REVISION
1	10/22	JMW	ADDED STRIPING

Barton & Loguidice, P.C.

DRAFTED BY: JMW/JJB
DESIGN BY: JMW

DEPARTMENT OF TRANSPORTATION
50 WEST MAIN STREET, SUITE 6100
ROCHESTER, NEW YORK 14614-1231

UNAUTHORIZED ALTERATION OR ADDITION TO THIS DRAWING IS A VIOLATION OF THE NEW YORK STATE EDUCATION LAW ARTICLE 145, SECTION 7209

PROJECT NAME: WESTFALL ROAD
LIMITS: E. HENRIETTA ROAD TO LAC-DE-VILLE BLVD
TOWN: BRIGHTON
CITY: ROCHESTER
CAPITAL PROJECT NO.: 4753.77
BRIDGE IDENTIFICATION NO.: N.A.

SIGNING & PAVEMENT MARKING PLAN STA. 6+00 TO STA. 10+00

SCALE: AS SHOWN
DATE ISSUED: 4/25/2014
DRAWING NO. SPM-1
SHEET NO. 84 OF 112

mek
I:\MicroStation\Workspace\PLOT\NYSDOT\NYSDOT_SIZE_B.TBL
I:\MicroStation\Workspace\Plot\NYSDOT\NYSDOT_HPLJ5200_B.plt

FILE NAME = I:\Shared\1000\1066005\AS-BUILTS\1066005_spm_01.dgn
DATE = 4/25/2014
TIME = 10:46:34 AM

"I hereby certify by my signature and seal below, that I have prepared this record drawing which is, to the best of my knowledge and in my professional opinion, a true representation of the work as constructed on the Westfall Road Improvements Phase III, Project No. 1409."

STATE OF NEW YORK · MATTHEW J. SCANLEY · No. 069383 · LICENSED PROFESSIONAL ENGINEER

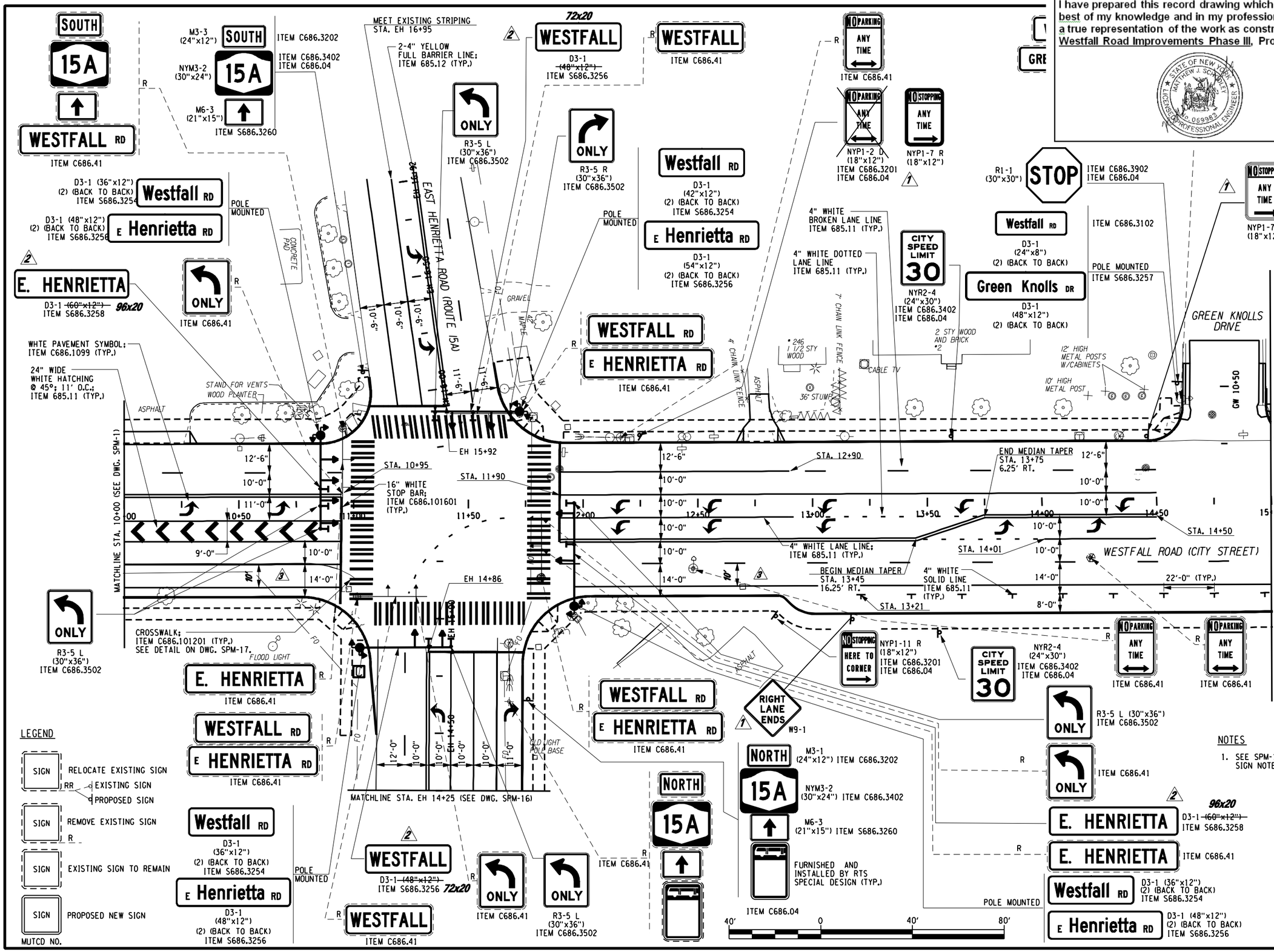

LEGEND

SIGN	RELOCATE EXISTING SIGN
RR	EXISTING SIGN
	PROPOSED SIGN
SIGN	REMOVE EXISTING SIGN
R	
SIGN	EXISTING SIGN TO REMAIN
SIGN	PROPOSED NEW SIGN
MUTCD NO.	

NOTES

1. SEE SPM-1 FOR TRAFFIC SIGN NOTES.

NO.	DATE	BY:	REVISION
1	10/12	JMW	ADDED SIGNS
2	10/12	JMW	SIGN DIMENSION
3	10/12	JMW	ADDED STRIPING

Barton & Loguidice, P.C.

DRAFTED BY: JMW/JJB
DESIGN BY: JMW

DEPARTMENT OF TRANSPORTATION
50 WEST MAIN STREET, SUITE 6100
ROCHESTER, NEW YORK 14614-1231

UNAUTHORIZED ALTERATION OR ADDITION TO THIS DRAWING IS A VIOLATION OF THE NEW YORK STATE EDUCATION LAW ARTICLE 145, SECTION 7209

PROJECT NAME: WESTFALL ROAD
LIMITS: E. HENRIETTA ROAD TO LAC-DE-VILLE BLVD
TOWN: BRIGHTON
CITY: ROCHESTER
CAPITAL PROJECT NO.: 4753.77
BRIDGE IDENTIFICATION NO.: N.A.

SIGNING & PAVEMENT MARKING PLAN STA. 10+00 TO STA. 15+00

SCALE: AS SHOWN
DATE ISSUED: 4/25/2014
DRAWING NO. SPM-2
SHEET NO. 85 OF 112

mek
I:\MicroStation\Workspace\PLOT\NYSDOT\NYSDOT_SIZE_B.TBL
I:\MicroStation\Workspace\Plot\NYSDOT\NYSDOT_HPLJ5200_B.plt

FILE NAME = I:\Shared\1000\1066005\AS-BUILTS\1066005_spm_02.dgn
DATE = 4/25/2014
TIME = 10:47:03 AM

mek
I:\MicroStation\Workspace\PLOT\NYSDOT\NYSDOT_SIZE_B.TBL
I:\MicroStation\Workspace\Plot\NYSDOT\NYSDOT_HPLJ5200_B.plt

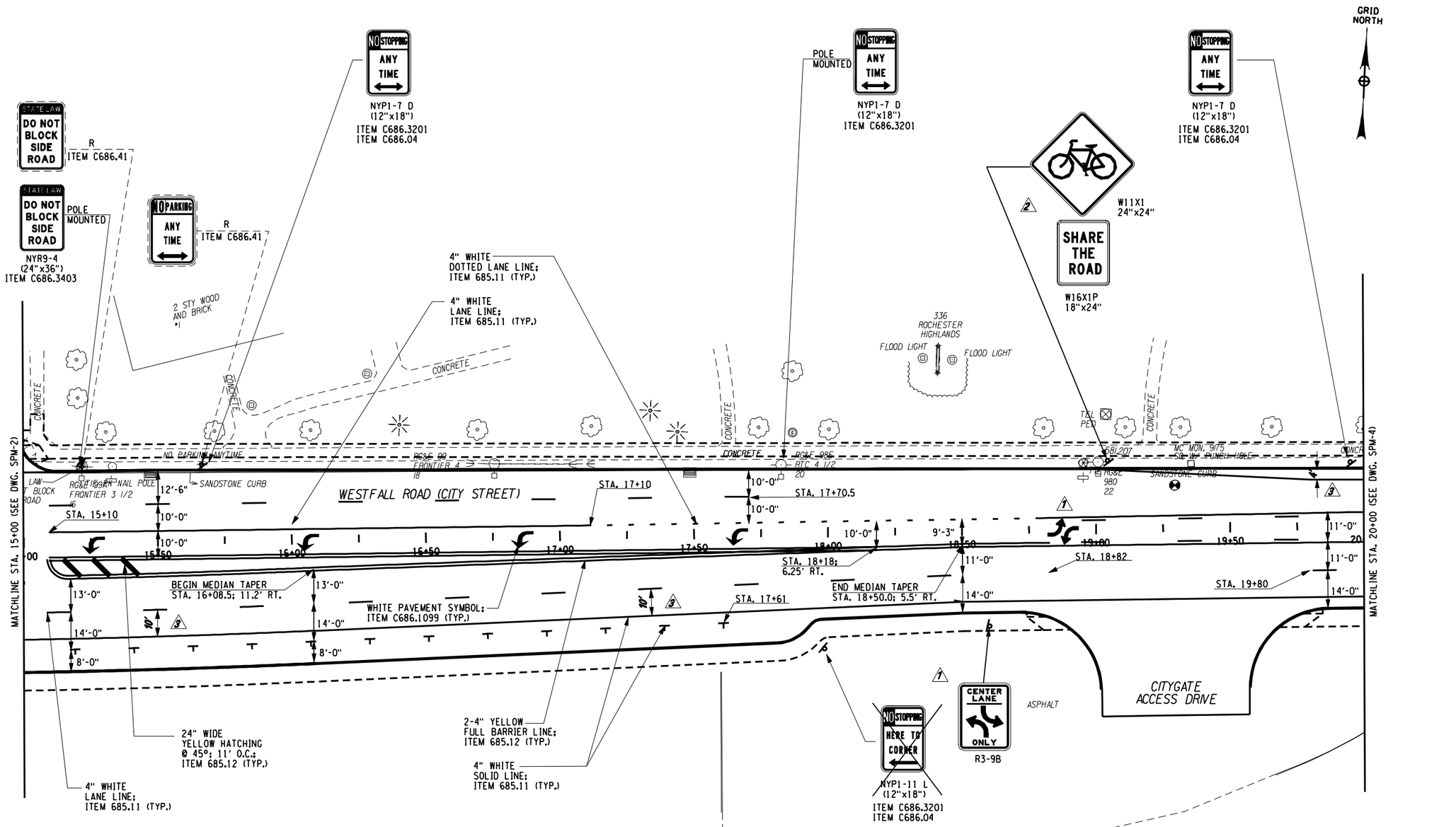

LEGEND

SIGN RR	RELOCATE EXISTING SIGN
	EXISTING SIGN
	PROPOSED SIGN
SIGN R	REMOVE EXISTING SIGN
SIGN	EXISTING SIGN TO REMAIN
SIGN	PROPOSED NEW SIGN
MUTCD NO.	

NOTES

1. SEE SPM-1 FOR TRAFFIC SIGN NOTES.

"I hereby certify by my signature and seal below, that I have prepared this record drawing which is, to the best of my knowledge and in my professional opinion, a true representation of the work as constructed on the Westfall Road Improvements Phase III, Project No. 1409."

STATE OF NEW YORK · MATTHEW J. SCHOLEY · No. 069983 · LICENSED PROFESSIONAL ENGINEER

NO.	DATE	BY:	REVISION
1	10/17/12	JMW	REVISED SIGNS & SYMBOL
2	10/17/12	JMW	ADDED SIGNS
3	10/17/12	JMW	ADDED STRIPING

Barton & Loguidice, P.C.

DRAFTED BY: JMW/JJB
DESIGN BY: JMW

DEPARTMENT OF TRANSPORTATION
50 WEST MAIN STREET, SUITE 6100
ROCHESTER, NEW YORK 14614-1231

UNAUTHORIZED ALTERATION OR ADDITION TO THIS DRAWING IS A VIOLATION OF THE NEW YORK STATE EDUCATION LAW ARTICLE 145, SECTION 7209

PROJECT NAME: WESTFALL ROAD
LIMITS: E. HENRIETTA ROAD TO LAC-DE-VILLE BLVD
TOWN: BRIGHTON
CITY: ROCHESTER
CAPITAL PROJECT NO.: 4753.77
BRIDGE IDENTIFICATION NO.: N.A.

SIGNING & PAVEMENT MARKING PLAN
STA. 15+00 TO STA. 20+00

SCALE: AS SHOWN
DATE ISSUED: 4/25/2014
DRAWING NO. SPM-3
SHEET NO. 86 OF 112

FILE NAME = I:\Shared\1000\1066005\AS-BUILTS\1066005_spm_03.dgn
DATE = 4/25/2014
TIME = 10:47:32 AM

"I hereby certify by my signature and seal below, that I have prepared this record drawing which is, to the best of my knowledge and in my professional opinion, a true representation of the work as constructed on the Westfall Road Improvements Phase III, Project No. 1409."

STATE OF NEW YORK · MATTHEW J. SCHOLLE · LICENSED PROFESSIONAL ENGINEER · No. 069983

GRID NORTH

LEFT LANE MUST TURN LEFT
R3-7 L (30"x30")
ITEM C686.3501
ITEM C686.04

NO STOPPING ANY TIME
NYP1-7 D (12"x18")
ITEM C686.3201
ITEM C686.04

STOP
R1-1 (30"x30")
ITEM C686.3902
ITEM C686.04

STOP
ITEM C686.41

NO STANDING HERE TO CORNER
NYP1-10 R (12"x18")
ITEM C686.3201
ITEM C686.04

ITEM C686.41

WESTFALL RD
GREEN KNOLLS DR
ITEM C686.41

Westfall RD — D3-1 (24"x8") (2) (BACK TO BACK) ITEM C686.3102
Green Knolls DR — D3-1 (48"x12") (2) (BACK TO BACK) ITEM S686.3257
POLE MOUNTED

STATE LAW
DO NOT BLOCK SIDE ROAD
NYR9-4 (24"x36")
ITEM C686.3403
POLE MOUNTED

CITY SPEED LIMIT 30
ITEM C686.41

NO STOPPING ANY TIME
NYP1-7 D (12"x18")
ITEM C686.3201
POLE MOUNTED

WHITE PAVEMENT SYMBOL;
ITEM C686.1099 (TYP.)

GREEN KNOLLS DRIVE

*149 2 STY WOOD AND BRICK

*148 2 STY WOOD AND BRICK

CONCRETE

GE 10+50

RG&E 98 RTC 5 1/2 24

RG&E 97 RTC 26

RG&E 96 RTC 7

CHAIN LINK FENCE

4 - FLOOD LIGHTS

ASPHALT

SANDSTONE CURB

GRANITE CURB

14'-0"

11'-0"

10'

STA. 20+75

STA. 21+25

STA. 21+75

STA. 22+31

STA. 22+75

22+00

WESTFALL ROAD (CITY STREET)

PROPOSED ℄ OF IMPROVEMENT

MATCHLINE STA. 20+00 (SEE DWG. SPM-3)

MATCHLINE STA. 25+00 (SEE DWG. SPM-5)

20+50 21+00 21+50 22+50 23+00 23+50 24+00 24+50

4" WHITE DOTTED LANE LINE; ITEM 6885.11 (TYP.)

4" WHITE LANE LINE; ITEM 685.11 (TYP.)

4" WHITE BROKEN LANE LINE; ITEM 685.11 (TYP.)

24" WIDE YELLOW HATCHING @ 45°; 11' O.C.; ITEM 685.12 (TYP.)

2-4" YELLOW FULL BARRIER LINE; ITEM 685.12 (TYP.)

4" YELLOW PARTIAL BARRIER LINE; ITEM 685.12 (TYP.)

STOP
ITEM C686.41

W4-2 R (24"x24")
ITEM C686.3401

NO STOPPING ANY TIME
NYP1-7 D (12"x18")
ITEM C686.3201
ITEM C686.04

NO STOPPING ANY TIME
NYP1-7 D (12"x18")
ITEM C686.3201
ITEM C686.04

NO STOPPING ANY TIME
NYP1-7 D (12"x18")
ITEM C686.3201
ITEM C686.04

ITEM C686.04

2 ST WOOD

40' 0 40' 80'

LEGEND

SIGN (RR)	RELOCATE EXISTING SIGN
	EXISTING SIGN
	PROPOSED SIGN
SIGN (R)	REMOVE EXISTING SIGN
SIGN	EXISTING SIGN TO REMAIN
SIGN	PROPOSED NEW SIGN

MUTCD NO.

NOTES

1. SEE SPM-1 FOR TRAFFIC SIGN NOTES.

NO.	DATE	BY:	REVISION
1	10/17	JMW	ADDED STRIPING

Barton & Loguidice, P.C.

DRAFTED BY: JMW/JJB
DESIGN BY: JMW

DEPARTMENT OF TRANSPORTATION
50 WEST MAIN STREET, SUITE 6100
ROCHESTER, NEW YORK 14614-1231

UNAUTHORIZED ALTERATION OR ADDITION TO THIS DRAWING IS A VIOLATION OF THE NEW YORK STATE EDUCATION LAW ARTICLE 145, SECTION 7209

PROJECT NAME: WESTFALL ROAD
LIMITS: E. HENRIETTA ROAD TO LAC-DE-VILLE BLVD
TOWN: BRIGHTON
CITY: ROCHESTER
CAPITAL PROJECT NO.: 4753.77
BRIDGE IDENTIFICATION NO.: N.A.

SIGNING & PAVEMENT MARKING PLAN
STA. 20+00 TO STA. 25+00

SCALE: AS SHOWN
DATE ISSUED: 4/25/2014
DRAWING NO. SPM-4
SHEET NO. 87 OF 112

mek
I:\MicroStation\Workspace\PLOT\NYSDOT\NYSDOT_SIZE_B.TBL
I:\MicroStation\Workspace\Plot\NYSDOT\NYSDOT_HPLJ5200_B.plt

FILE NAME = I:\Shared\1000\1066005\AS-BUILTS\10660005_spm_04.dgn
DATE = 4/25/2014
TIME = 10:47:59 AM

"I hereby certify by my signature and seal below, that I have prepared this record drawing which is, to the best of my knowledge and in my professional opinion, a true representation of the work as constructed on the Westfall Road Improvements Phase III, Project No. 1409."

STATE OF NEW YORK · MATTHEW J. SCHOLEY · No. 099983 · LICENSED PROFESSIONAL ENGINEER

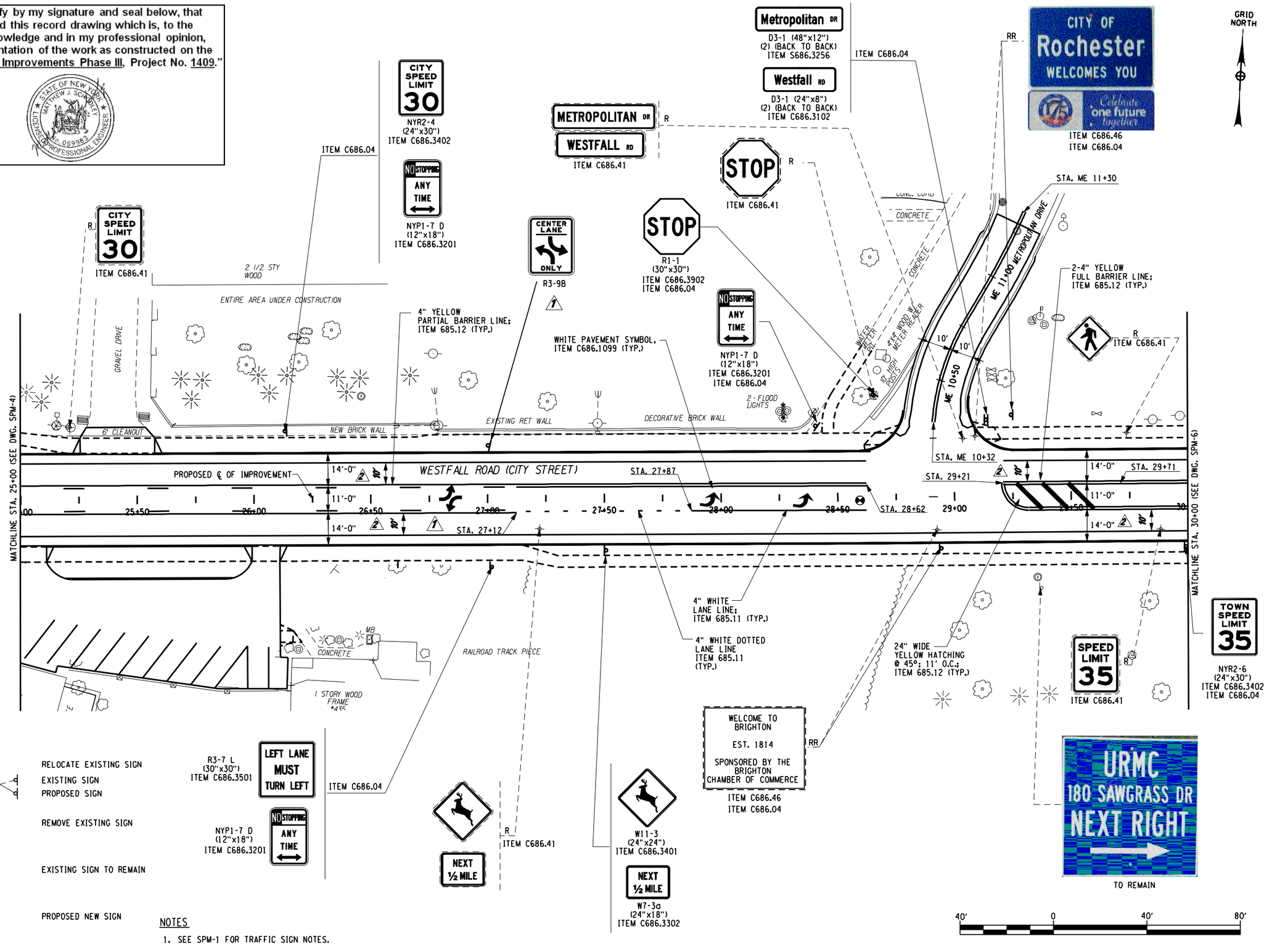

LEGEND

SIGN (RR)	RELOCATE EXISTING SIGN
	EXISTING SIGN
	PROPOSED SIGN
SIGN (R)	REMOVE EXISTING SIGN
SIGN	EXISTING SIGN TO REMAIN
SIGN	PROPOSED NEW SIGN
MUTCD NO.	

NOTES

1. SEE SPM-1 FOR TRAFFIC SIGN NOTES.

NO.	DATE	BY:	REVISION
1	10/17/13	JMW	ADDED SIGN & SYMBOL
2	10/17/13	JMW	ADDED STRIPING

Barton & Loguidice, P.C.

DRAFTED BY: JMW/JJB

DESIGN BY: JMW

DEPARTMENT OF TRANSPORTATION
50 WEST MAIN STREET, SUITE 6100
ROCHESTER, NEW YORK 14614-1231

UNAUTHORIZED ALTERATION OR ADDITION TO THIS DRAWING IS A VIOLATION OF THE NEW YORK STATE EDUCATION LAW ARTICLE 145, SECTION 7209

PROJECT NAME: WESTFALL ROAD
LIMITS: E. HENRIETTA ROAD TO LAC-DE-VILLE BLVD
TOWN: BRIGHTON
CITY: ROCHESTER
CAPITAL PROJECT NO.: 4753.77
BRIDGE IDENTIFICATION NO.: N.A.

SIGNING & PAVEMENT MARKING PLAN
STA. 25+00 TO STA. 30+00

SCALE: AS SHOWN
DATE ISSUED: 4/25/2014
DRAWING NO. SPM-5
SHEET NO. 88 OF 112

mek
I:\MicroStation\Workspace\PLOT\NYSDOT\NYSDOT_SIZE_B.TBL
I:\MicroStation\Workspace\Plot\NYSDOT\NYSDOT_HPLJ5200_B.plt

FILE NAME = I:\Shared\1000\1066005\AS-BUILTS\1066005_spm_05.dgn
DATE = 4/25/2014
TIME = 10:48:27 AM

"I hereby certify by my signature and seal below, that I have prepared this record drawing which is, to the best of my knowledge and in my professional opinion, a true representation of the work as constructed on the Westfall Road Improvements Phase III, Project No. 1409."

STATE OF NEW YORK · MATTHEW J. SCHADLEY · LICENSED PROFESSIONAL ENGINEER · NO. 069983

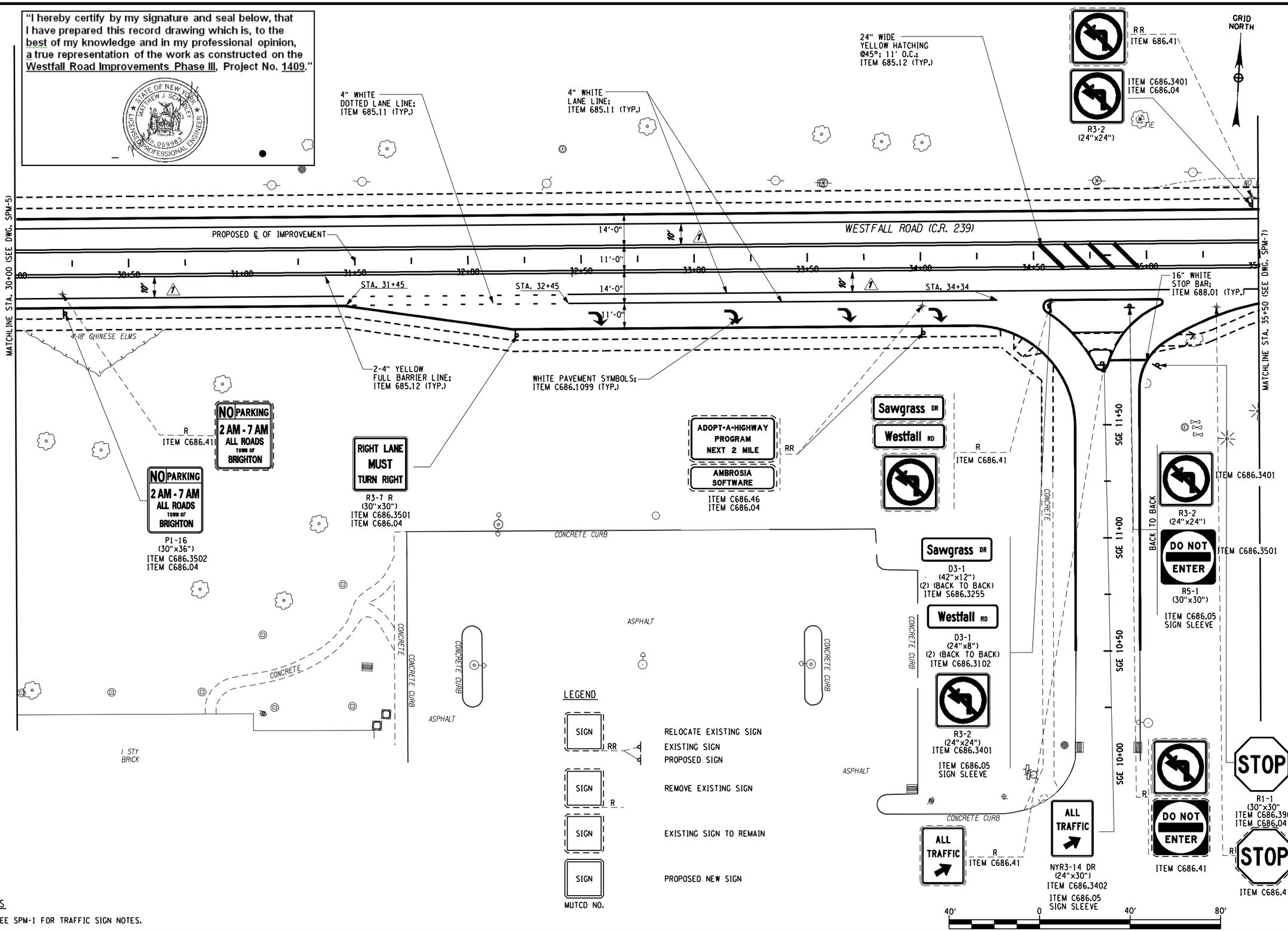

NOTES

1. SEE SPM-1 FOR TRAFFIC SIGN NOTES.

NO.	DATE	BY:	REVISION
1	10/17	JMW	ADDED STRIPING

Barton & Loguidice, P.C.

DRAFTED BY: JMW/JJB

DESIGN BY: JMW

DEPARTMENT OF TRANSPORTATION
50 WEST MAIN STREET, SUITE 6100
ROCHESTER, NEW YORK 14614-1231

UNAUTHORIZED ALTERATION OR ADDITION TO THIS DRAWING IS A VIOLATION OF THE NEW YORK STATE EDUCATION LAW ARTICLE 145, SECTION 7209

PROJECT NAME: WESTFALL ROAD
LIMITS: E. HENRIETTA ROAD TO LAC-DE-VILLE BLVD
TOWN: BRIGHTON
CITY: ROCHESTER
CAPITAL PROJECT NO.: 4753.77
BRIDGE IDENTIFICATION NO.: N.A.

SIGNING & PAVEMENT MARKING PLAN
STA. 30+00 TO STA. 35+50

SCALE: AS SHOWN
DATE ISSUED: 4/25/2014
DRAWING NO. SPM-6
SHEET NO. 89 OF 112

mek
I:\MicroStation\Workspace\PLOT\NYSDOT\NYSDOT_SIZE_B.TBL
I:\MicroStation\Workspace\Plot\NYSDOT\NYSDOT_HPLJ5200_B.plt

FILE NAME = I:\Shared\1000\1066005\AS-BUILTS\1066005_spm_06.dgn
DATE = 4/25/2014
TIME = 10:48:57 AM

"I hereby certify by my signature and seal below, that I have prepared this record drawing which is, to the best of my knowledge and in my professional opinion, a true representation of the work as constructed on the Westfall Road Improvements Phase III, Project No. 1409."

STATE OF NEW YORK · MATTHEW J. SCHOLEY · LICENSED PROFESSIONAL ENGINEER · No. 069983

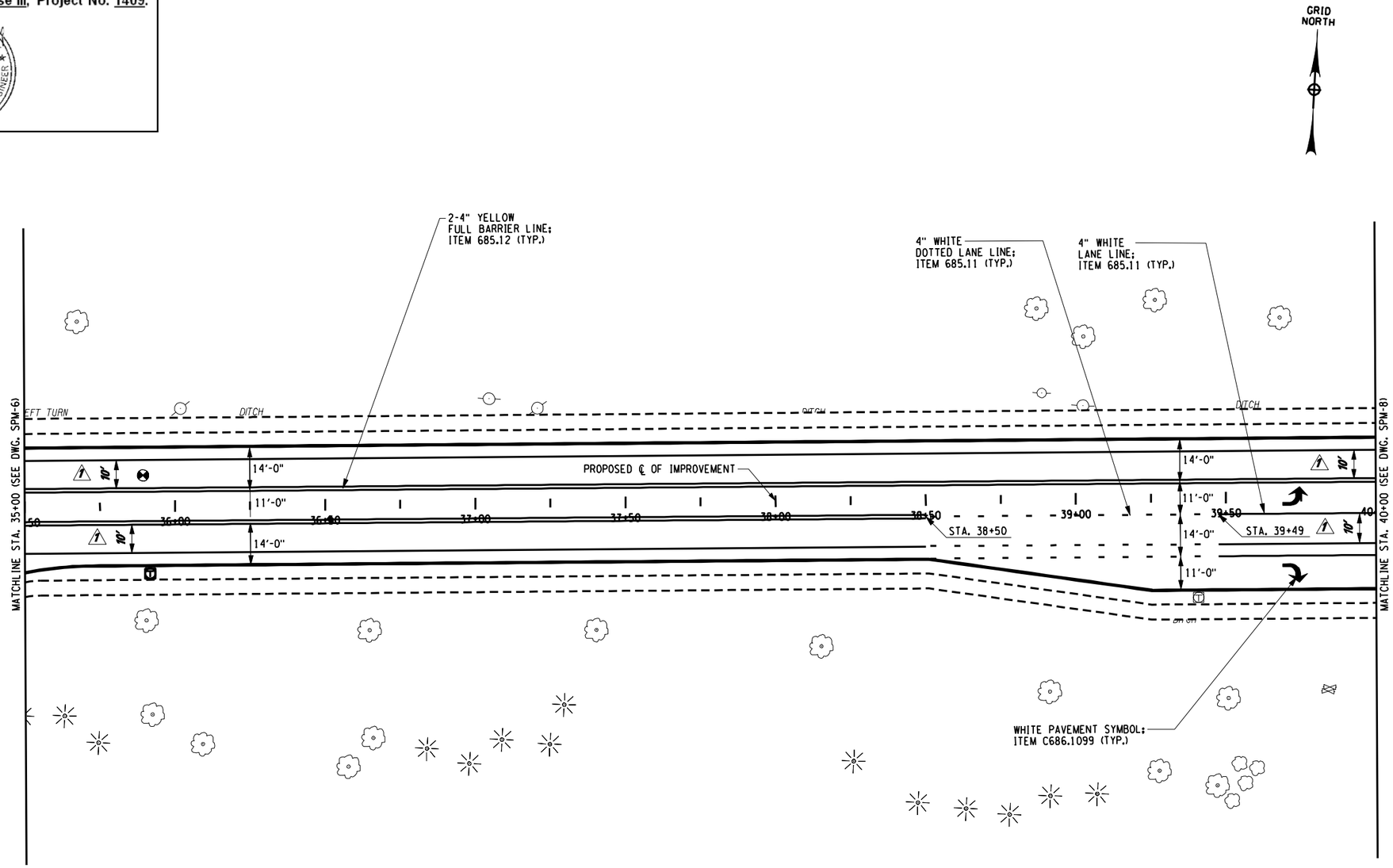

LEGEND

SIGN RR	RELOCATE EXISTING SIGN
	EXISTING SIGN
	PROPOSED SIGN
SIGN R	REMOVE EXISTING SIGN
SIGN	EXISTING SIGN TO REMAIN
SIGN	PROPOSED NEW SIGN

MUTCD NO.

NOTES

1. SEE SPM-1 FOR TRAFFIC SIGN NOTES.

40' 0 40' 80'

NO.	DATE	BY:	REVISION
1	10/4/12	JMW	ADDED STRIPING

Barton & Loguidice, P.C.

DRAFTED BY: JMW/JJB

DESIGN BY: JMW

DEPARTMENT OF TRANSPORTATION
50 WEST MAIN STREET, SUITE 6100
ROCHESTER, NEW YORK 14614-1231

UNAUTHORIZED ALTERATION OR ADDITION TO THIS DRAWING IS A VIOLATION OF THE NEW YORK STATE EDUCATION LAW ARTICLE 145, SECTION 7209

PROJECT NAME: WESTFALL ROAD
LIMITS: E. HENRIETTA ROAD TO LAC-DE-VILLE BLVD
TOWN: BRIGHTON
CITY: ROCHESTER
CAPITAL PROJECT NO.: 4753.77
BRIDGE IDENTIFICATION NO.: N.A.

SIGNING & PAVEMENT MARKING PLAN
STA. 35+50 TO STA. 40+00

SCALE: AS SHOWN
DATE ISSUED: 4/25/2014
DRAWING NO. SPM-7
SHEET NO. 80 OF 112

mek
I:\MicroStation\Workspace\PLOT\NYSDOT\NYSDOT_SIZE_B.TBL
I:\MicroStation\Workspace\Plot\NYSDOT\NYSDOT_HPLJ5200_B.plt

FILE NAME = I:\Shared\1000\1066005\AS-BUILTS\1066005_spm_07.dgn
DATE = 4/25/2014
TIME = 10:49:28 AM

"I hereby certify by my signature and seal below, that I have prepared this record drawing which is, to the best of my knowledge and in my professional opinion, a true representation of the work as constructed on the Westfall Road Improvements Phase III, Project No. 1409."

STATE OF NEW YORK · MATTHEW J. SCANLEY · LICENSED PROFESSIONAL ENGINEER · No. 069983

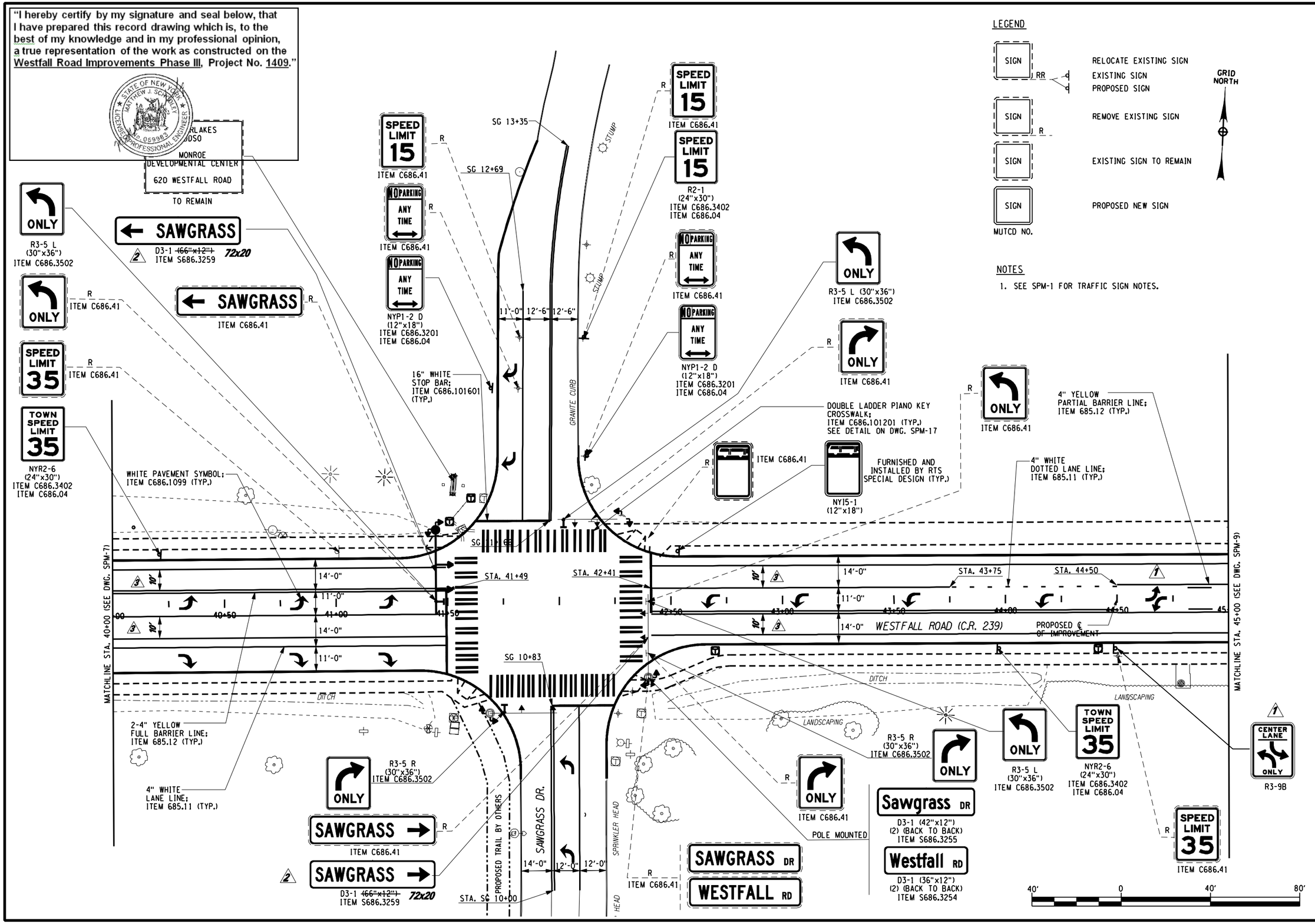

NO.	DATE	BY:	REVISION
1	08/07	JMW	ADDED SIGN & SYMBOL
2	08/07	JMW	SIGN DIMENSIONS
3	08/07	JMW	ADDED STRIPING

Barton & Loguidice, P.C.

DRAFTED BY: JMW/JJB

DESIGN BY: JMW

DEPARTMENT OF TRANSPORTATION
50 WEST MAIN STREET, SUITE 6100
ROCHESTER, NEW YORK 14614-1231

UNAUTHORIZED ALTERATION OR ADDITION TO THIS DRAWING IS A VIOLATION OF THE NEW YORK STATE EDUCATION LAW ARTICLE 145, SECTION 7209

PROJECT NAME: WESTFALL ROAD
LIMITS: E. HENRIETTA ROAD TO LAC-DE-VILLE BLVD
TOWN: BRIGHTON
CITY: ROCHESTER
CAPITAL PROJECT NO.: 4753.77
BRIDGE IDENTIFICATION NO.: N.A.

SIGNING & PAVEMENT MARKING PLAN
STA. 40+00 TO STA. 45+00

SCALE: AS SHOWN
DATE ISSUED: 4/25/2014
DRAWING NO. SPM-8
SHEET NO. 91 OF 112

mek
I:\MicroStation\Workspace\PLOT\NYSDOT\NYSDOT_SIZE_B.TBL
I:\MicroStation\Workspace\Plot\NYSDOT\NYSDOT_HPLJ5200_B.plt

FILE NAME = I:\Shared\1000\1066005\AS-BUILTS\1066005_spm_08.dgn
DATE = 4/25/2014
TIME = 10:49:55 AM

"I hereby certify by my signature and seal below, that I have prepared this record drawing which is, to the best of my knowledge and in my professional opinion, a true representation of the work as constructed on the Westfall Road Improvements Phase III, Project No. 1409."

STATE OF NEW YORK · MATTHEW J. SCHOLLER · No. 069983 · LICENSED PROFESSIONAL ENGINEER

GRID NORTH

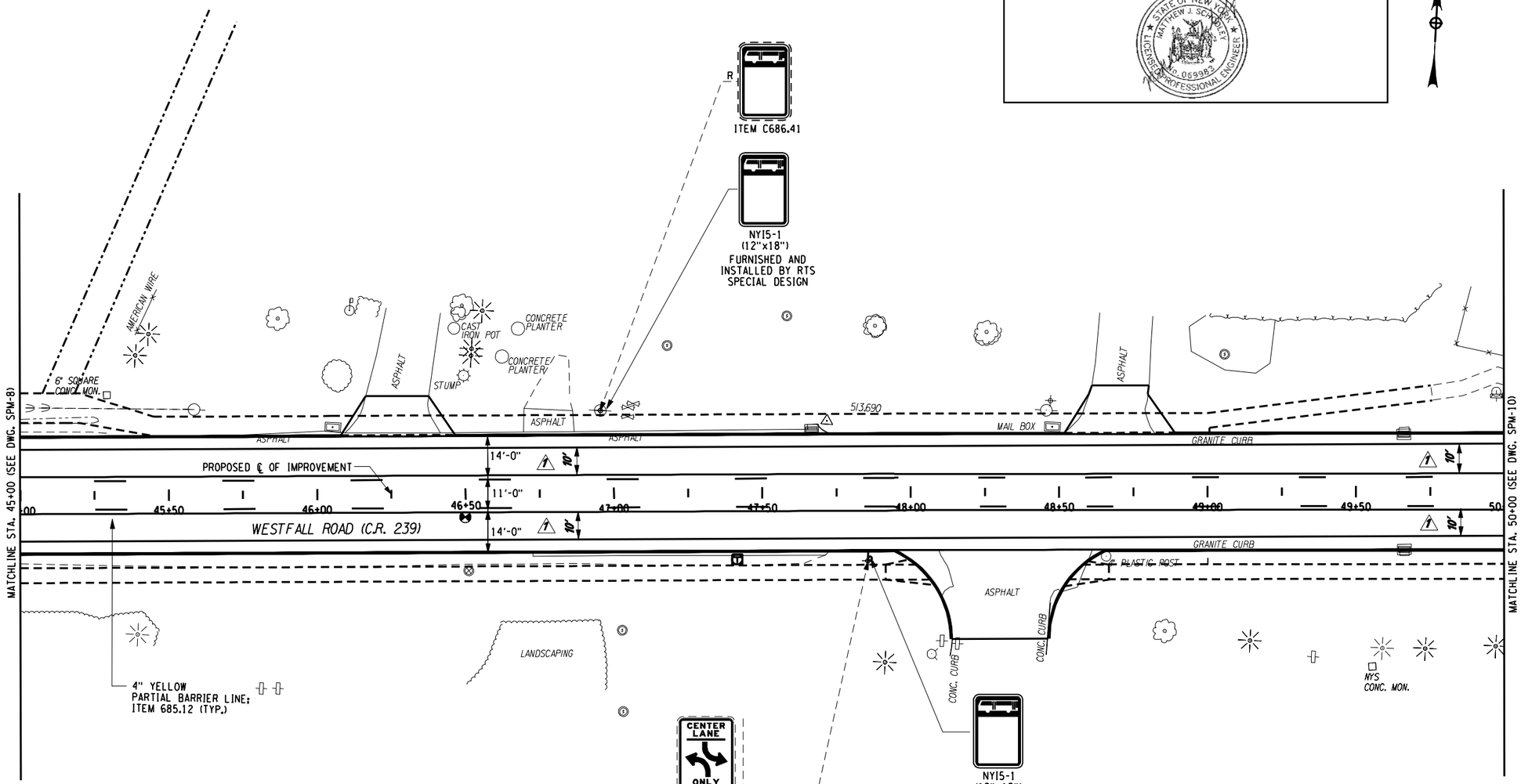

LEGEND

SIGN RR	RELOCATE EXISTING SIGN
	EXISTING SIGN
	PROPOSED SIGN
SIGN R	REMOVE EXISTING SIGN
SIGN	EXISTING SIGN TO REMAIN
SIGN	PROPOSED NEW SIGN
MUTCD NO.	

NOTES

1. SEE SPM-1 FOR TRAFFIC SIGN NOTES.

40' 0 40' 80'

NO.	DATE	BY:	REVISION
1	10/17	JMW	ADDED STRIPING

Barton & Loguidice, P.C.

DRAFTED BY: JMW/JJB

DESIGN BY: JMW

DEPARTMENT OF TRANSPORTATION
50 WEST MAIN STREET, SUITE 6100
ROCHESTER, NEW YORK 14614-1231

UNAUTHORIZED ALTERATION OR ADDITION TO THIS DRAWING IS A VIOLATION OF THE NEW YORK STATE EDUCATION LAW ARTICLE 145, SECTION 7209

PROJECT NAME: WESTFALL ROAD
LIMITS: E. HENRIETTA ROAD TO LAC-DE-VILLE BLVD
TOWN: BRIGHTON
CITY: ROCHESTER
CAPITAL PROJECT NO.: 4753.77
BRIDGE IDENTIFICATION NO.: N.A.

SIGNING & PAVEMENT MARKING PLAN
STA. 45+00
TO STA. 50+00

SCALE: AS SHOWN
DATE ISSUED: 4/25/2014
DRAWING NO. SPM-9
SHEET NO. 92 OF 112

mek
I:\MicroStation\Workspace\PLOT\NYSDOT\NYSDOT_SIZE_B.TBL
I:\MicroStation\Workspace\Plot\NYSDOT\NYSDOT_HPLJ5200_B.plt

FILE NAME = I:\Shared\1000\1066005\AS-BUILTS\1066005_spm_09.dgn
DATE = 4/25/2014
TIME = 10:50:23 AM

"I hereby certify by my signature and seal below, that I have prepared this record drawing which is, to the best of my knowledge and in my professional opinion, a true representation of the work as constructed on the Westfall Road Improvements Phase III, Project No. 1409."

STATE OF NEW YORK · MATTHEW J. SCANLEY · LICENSE No. 069983 · PROFESSIONAL ENGINEER

LEGEND

- SIGN (RR) — RELOCATE EXISTING SIGN
- EXISTING SIGN
- PROPOSED SIGN
- SIGN (R) — REMOVE EXISTING SIGN
- SIGN — EXISTING SIGN TO REMAIN
- SIGN — PROPOSED NEW SIGN

MUTCD NO.

GRID NORTH

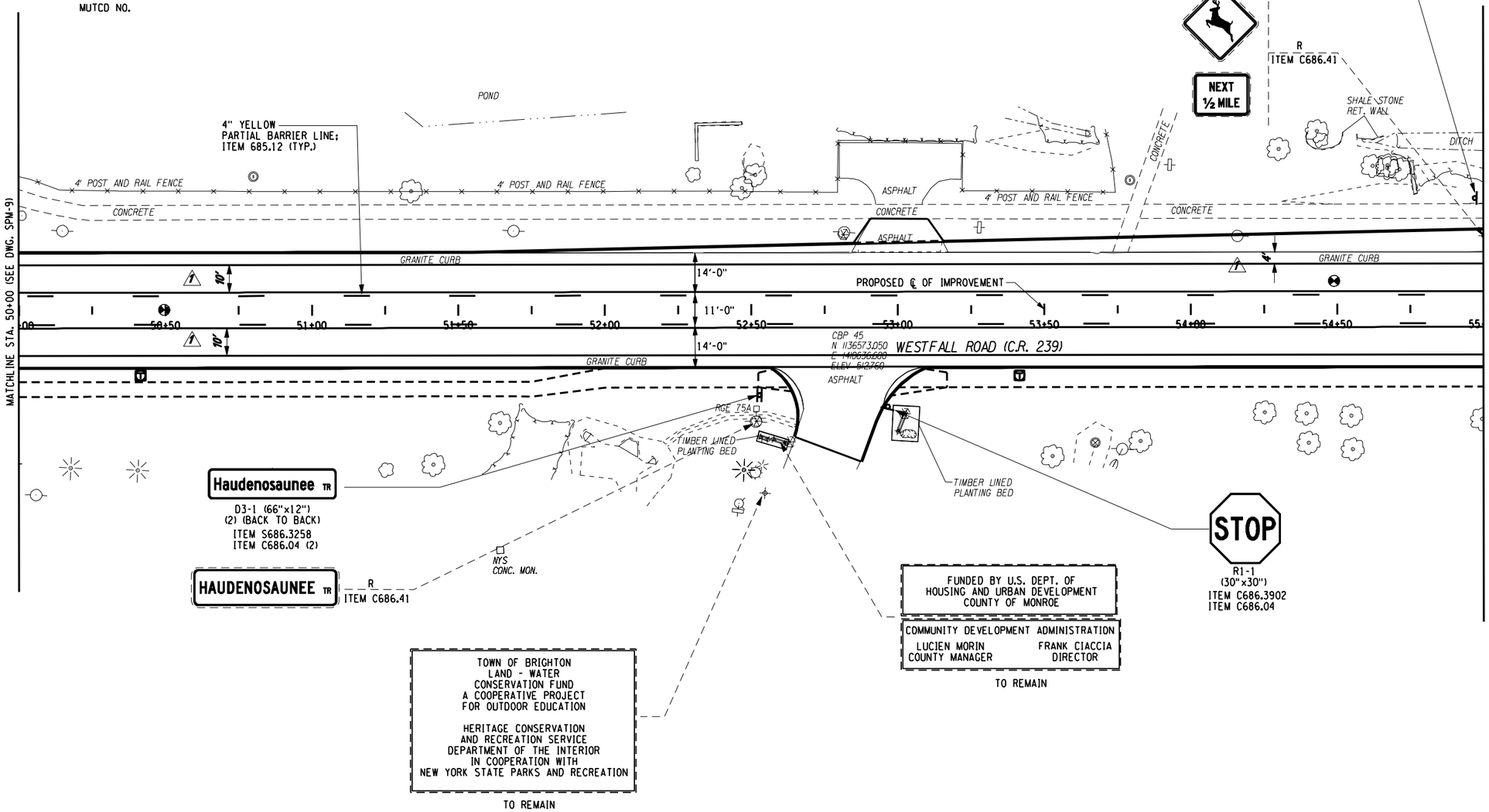

NOTES

1. SEE SPM-1 FOR TRAFFIC SIGN NOTES.

NO.	DATE	BY:	REVISION
1	10/17	JMW	ADDED STRIPING

Barton & Loguidice, P.C.

DRAFTED BY: JMW/JJB
DESIGN BY: JMW

DEPARTMENT OF TRANSPORTATION
50 WEST MAIN STREET, SUITE 6100
ROCHESTER, NEW YORK 14614-1231

UNAUTHORIZED ALTERATION OR ADDITION TO THIS DRAWING IS A VIOLATION OF THE NEW YORK STATE EDUCATION LAW ARTICLE 145, SECTION 7209

PROJECT NAME: WESTFALL ROAD
LIMITS: E. HENRIETTA ROAD TO LAC-DE-VILLE BLVD
TOWN: BRIGHTON
CITY: ROCHESTER
CAPITAL PROJECT NO.: 4753.77
BRIDGE IDENTIFICATION NO.: N.A.

SIGNING & PAVEMENT MARKING PLAN
STA. 50+00 TO STA. 55+00

SCALE: AS SHOWN
DATE ISSUED: 4/25/2014
DRAWING NO. SPM-10
SHEET NO. 93 OF 112

mek
I:\MicroStation\Workspace\PLOT\NYSDOT\NYSDOT_SIZE_B.TBL
I:\MicroStation\Workspace\Plot\NYSDOT\NYSDOT_HPLJ5200_B.plt

FILE NAME = I:\Shared\1000\1066005\AS-BUILTS\1066005_spm_10.dgn
DATE = 4/25/2014
TIME = 10:50:56 AM

"I hereby certify by my signature and seal below, that I have prepared this record drawing which is, to the best of my knowledge and in my professional opinion, a true representation of the work as constructed on the Westfall Road Improvements Phase III, Project No. 1409."

STATE OF NEW YORK · MATTHEW J. SCHOLLT · No. 069983 · LICENSED PROFESSIONAL ENGINEER

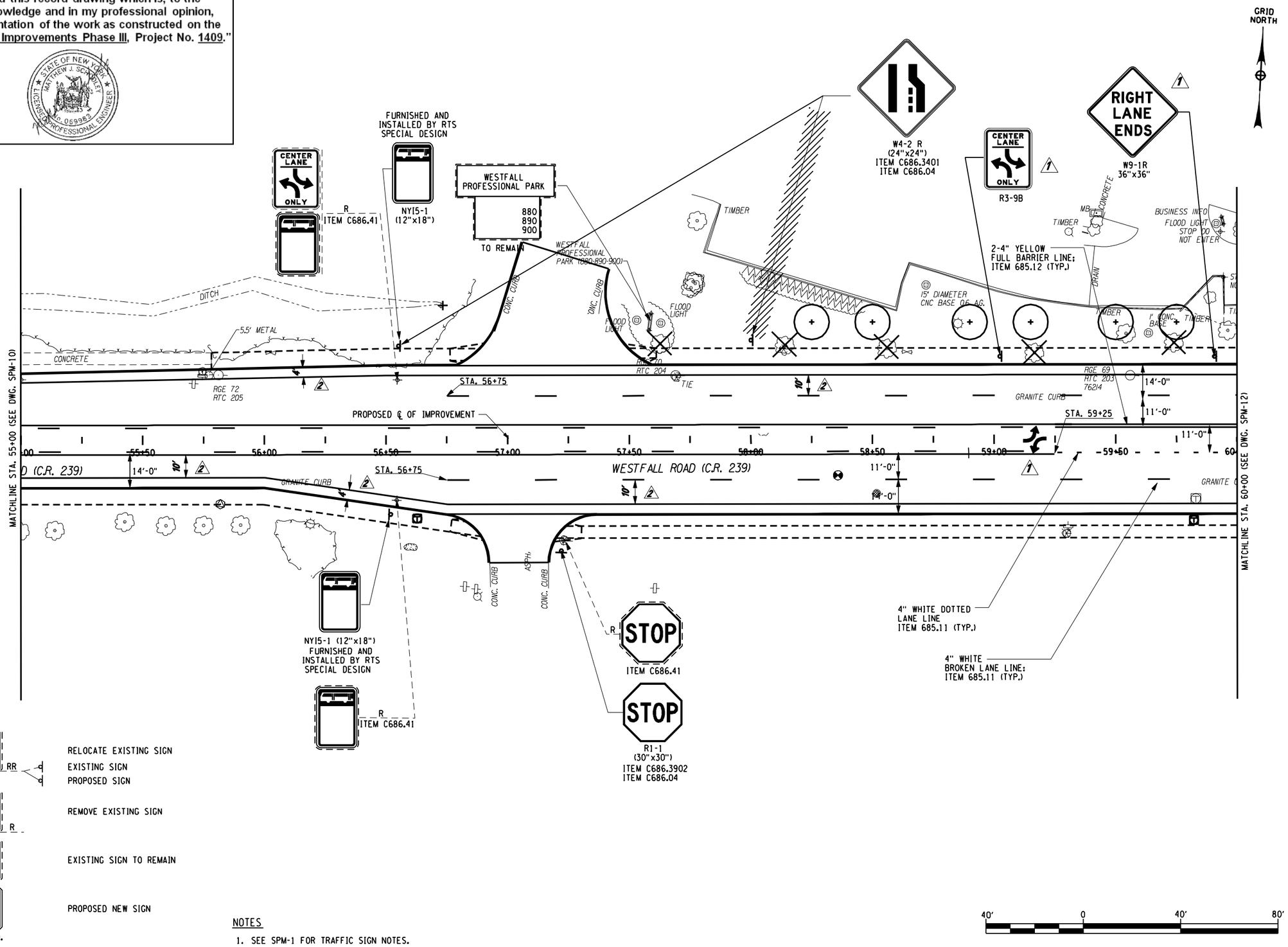

LEGEND

SIGN RR	RELOCATE EXISTING SIGN
	EXISTING SIGN
	PROPOSED SIGN
SIGN R	REMOVE EXISTING SIGN
SIGN	EXISTING SIGN TO REMAIN
SIGN	PROPOSED NEW SIGN
MUTCD NO.	

NOTES

1. SEE SPM-1 FOR TRAFFIC SIGN NOTES.

NO.	DATE	BY:	REVISION
1	06/02	JMW	ADDED SIGN & SYMBOL
2	06/09	JMW	ADDED STRIPING

Barton & Loguidice, P.C.

DRAFTED BY: JMW/JJB

DESIGN BY: JMW

DEPARTMENT OF TRANSPORTATION
50 WEST MAIN STREET, SUITE 6100
ROCHESTER, NEW YORK 14614-1231

UNAUTHORIZED ALTERATION OR ADDITION TO THIS DRAWING IS A VIOLATION OF THE NEW YORK STATE EDUCATION LAW ARTICLE 145, SECTION 7209

PROJECT NAME: WESTFALL ROAD
LIMITS: E. HENRIETTA ROAD TO LAC-DE-VILLE BLVD
TOWN: BRIGHTON
CITY: ROCHESTER
CAPITAL PROJECT NO.: 4753.77
BRIDGE IDENTIFICATION NO.: N.A.

SIGNING & PAVEMENT MARKING PLAN
STA. 55+00 TO STA. 60+00

SCALE: AS SHOWN
DATE ISSUED: 4/25/2014
DRAWING NO. SPM-11
SHEET NO. 94 OF 112

mek
I:\MicroStation\Workspace\PLOT\NYSDOT\NYSDOT_SIZE_B.TBL
I:\MicroStation\Workspace\Plot\NYSDOT\NYSDOT_HPLJ5200_B.plt

FILE NAME = I:\Shared\1000\1066005\AS-BUILTS\1066005_spm_11.dgn
DATE = 4/25/2014
TIME = 10:51:22 AM

"I hereby certify by my signature and seal below, that I have prepared this record drawing which is, to the best of my knowledge and in my professional opinion, a true representation of the work as constructed on the Westfall Road Improvements Phase III, Project No. 1409."

NOTES

1. SEE SPM-1 FOR TRAFFIC SIGN NOTES.

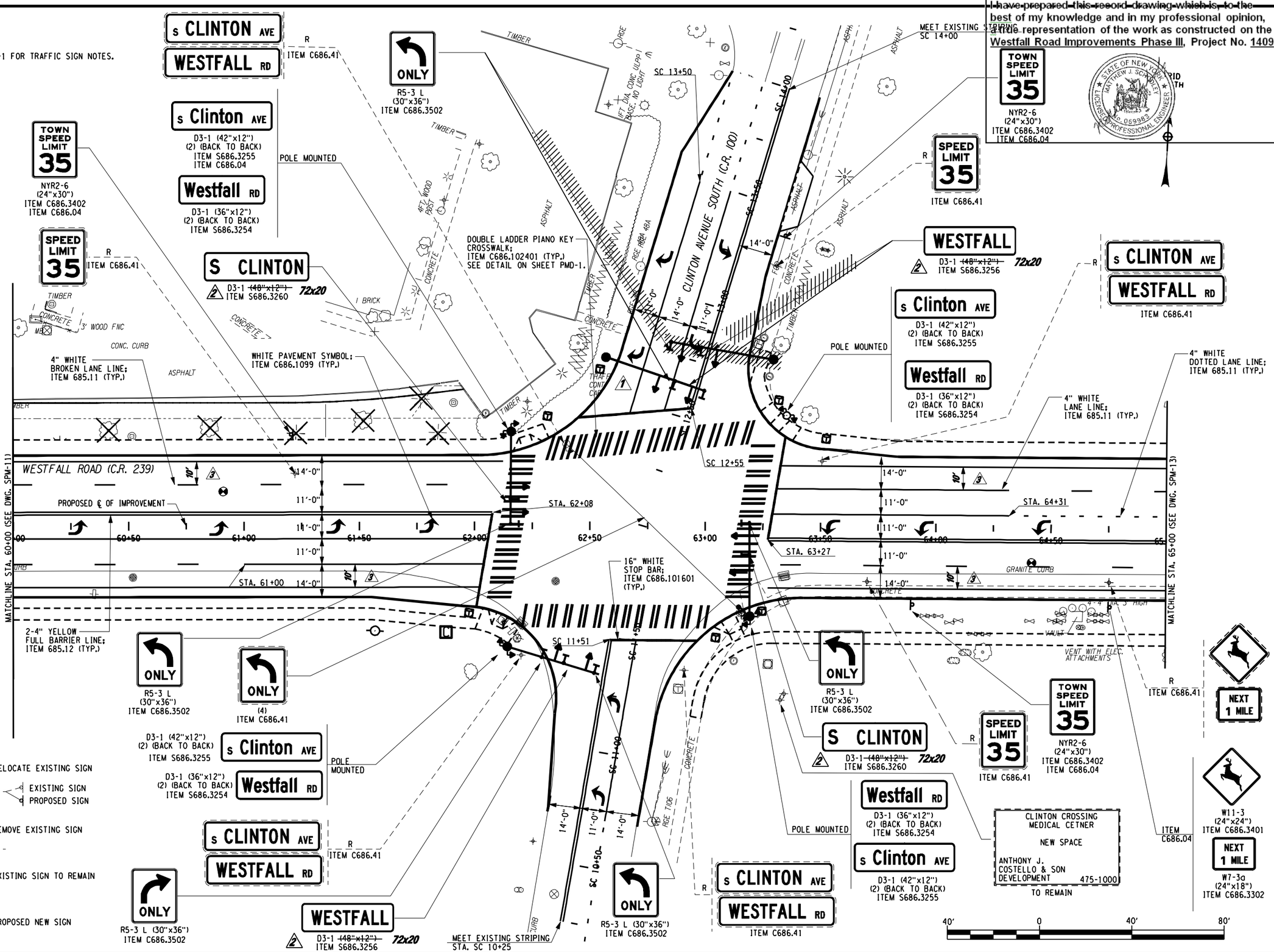

LEGEND

SIGN	RELOCATE EXISTING SIGN
RR	EXISTING SIGN / PROPOSED SIGN
SIGN R	REMOVE EXISTING SIGN
SIGN	EXISTING SIGN TO REMAIN
SIGN	PROPOSED NEW SIGN

MUTCD NO.

NO.	DATE	BY:	REVISION
1	10/17	JMW	RELOCATED SIGNAL POLE
2	10/17	JMW	SIGN DIMENSION
3	10/17	JMW	ADDED STRIPING

Barton & Loguidice, P.C.

DRAFTED BY: JMW/JJB
DESIGN BY: JMW

DEPARTMENT OF TRANSPORTATION
50 WEST MAIN STREET, SUITE 6100
ROCHESTER, NEW YORK 14614-1231

UNAUTHORIZED ALTERATION OR ADDITION TO THIS DRAWING IS A VIOLATION OF THE NEW YORK STATE EDUCATION LAW ARTICLE 145, SECTION 7209

PROJECT NAME: WESTFALL ROAD
LIMITS: E. HENRIETTA ROAD TO LAC-DE-VILLE BLVD
TOWN: BRIGHTON
CITY: ROCHESTER
CAPITAL PROJECT NO.: 4753.77
BRIDGE IDENTIFICATION NO.: N.A.

SIGNING & PAVEMENT MARKING PLAN
STA. 60+00 TO STA. 65+00

SCALE: AS SHOWN
DATE ISSUED: 4/25/2014
DRAWING NO. SPM-12
SHEET NO. 95 OF 112

mek
I:\MicroStation\Workspace\PLOT\NYSDOT\NYSDOT_SIZE_B.TBL
I:\MicroStation\Workspace\Plot\NYSDOT\NYSDOT_HPLJ5200_B.plt

FILE NAME = I:\Shared\1000\1066005\AS-BUILTS\1066005_spm_12.dgn
DATE = 4/25/2014
TIME = 10:51:51 AM

"I hereby certify by my signature and seal below, that I have prepared this record drawing which is, to the best of my knowledge and in my professional opinion, a true representation of the work as constructed on the Westfall Road Improvements Phase III, Project No. 1409."

STATE OF NEW YORK · MATTHEW J. SCANDURA · LICENSED PROFESSIONAL ENGINEER · NO. 069983

GRID NORTH

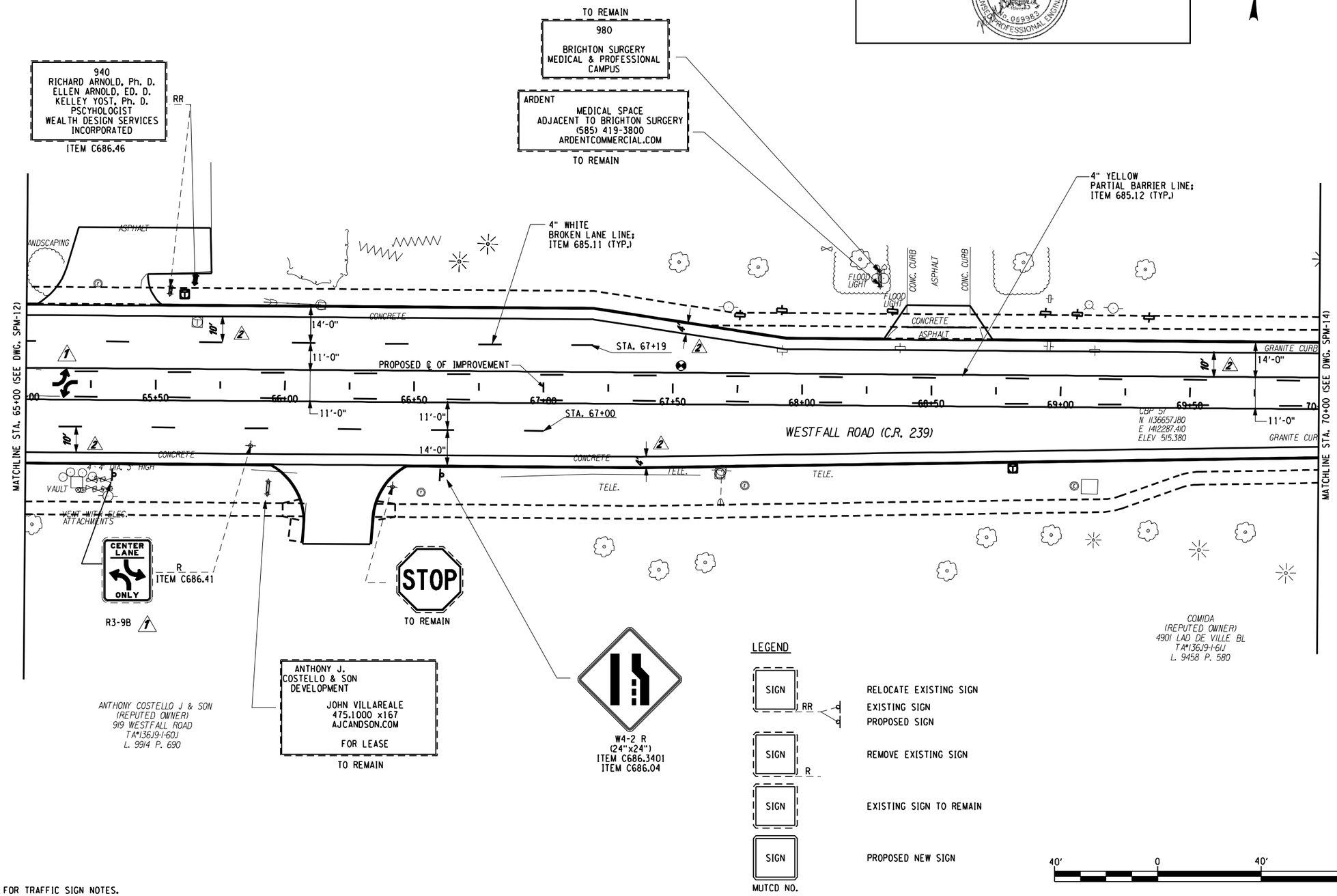

LEGEND

SIGN RR	RELOCATE EXISTING SIGN
	EXISTING SIGN
	PROPOSED SIGN
SIGN R	REMOVE EXISTING SIGN
SIGN	EXISTING SIGN TO REMAIN
SIGN	PROPOSED NEW SIGN

MUTCD NO.

40' 0 40' 80'

NOTES

1. SEE SPM-1 FOR TRAFFIC SIGN NOTES.

NO.	DATE	BY:	REVISION
1	10/17	JMW	LOCATION OF SIGN & SMYBOL
2	10/17	JMW	ADDED STRIPING

Barton & Loguidice, P.C.

DRAFTED BY: JMW/JJB

DESIGN BY: JMW

DEPARTMENT OF TRANSPORTATION
50 WEST MAIN STREET, SUITE 6100
ROCHESTER, NEW YORK 14614-1231

UNAUTHORIZED ALTERATION OR ADDITION TO THIS DRAWING IS A VIOLATION OF THE NEW YORK STATE EDUCATION LAW ARTICLE 145, SECTION 7209

PROJECT NAME: WESTFALL ROAD
LIMITS: E. HENRIETTA ROAD TO LAC-DE-VILLE BLVD
TOWN: BRIGHTON
CITY: ROCHESTER
CAPITAL PROJECT NO.: 4753.77
BRIDGE IDENTIFICATION NO.: N.A.

SIGNING & PAVEMENT MARKING PLAN
STA. 65+00
TO STA. 70+00

SCALE: AS SHOWN
DATE ISSUED: 4/25/2014
DRAWING NO. SPM-13
SHEET NO. 86 OF 112

mek
I:\MicroStation\Workspace\PLOT\NYSDOT\NYSDOT_SIZE_B.TBL
I:\MicroStation\Workspace\Plot\NYSDOT\NYSDOT_HPLJ5200_B.plt

FILE NAME = I:\Shared\1000\1066005\AS-BUILTS\1066005_spm_13.dgn
DATE = 4/25/2014
TIME = 10:52:28 AM

"I hereby certify by my signature and seal below, that I have prepared this record drawing which is, to the best of my knowledge and in my professional opinion, a true representation of the work as constructed on the Westfall Road Improvements Phase III, Project No. 1409."

STATE OF NEW YORK · MATTHEW J. SCANDILIS · No. 059983 · LICENSED PROFESSIONAL ENGINEER

GRID NORTH

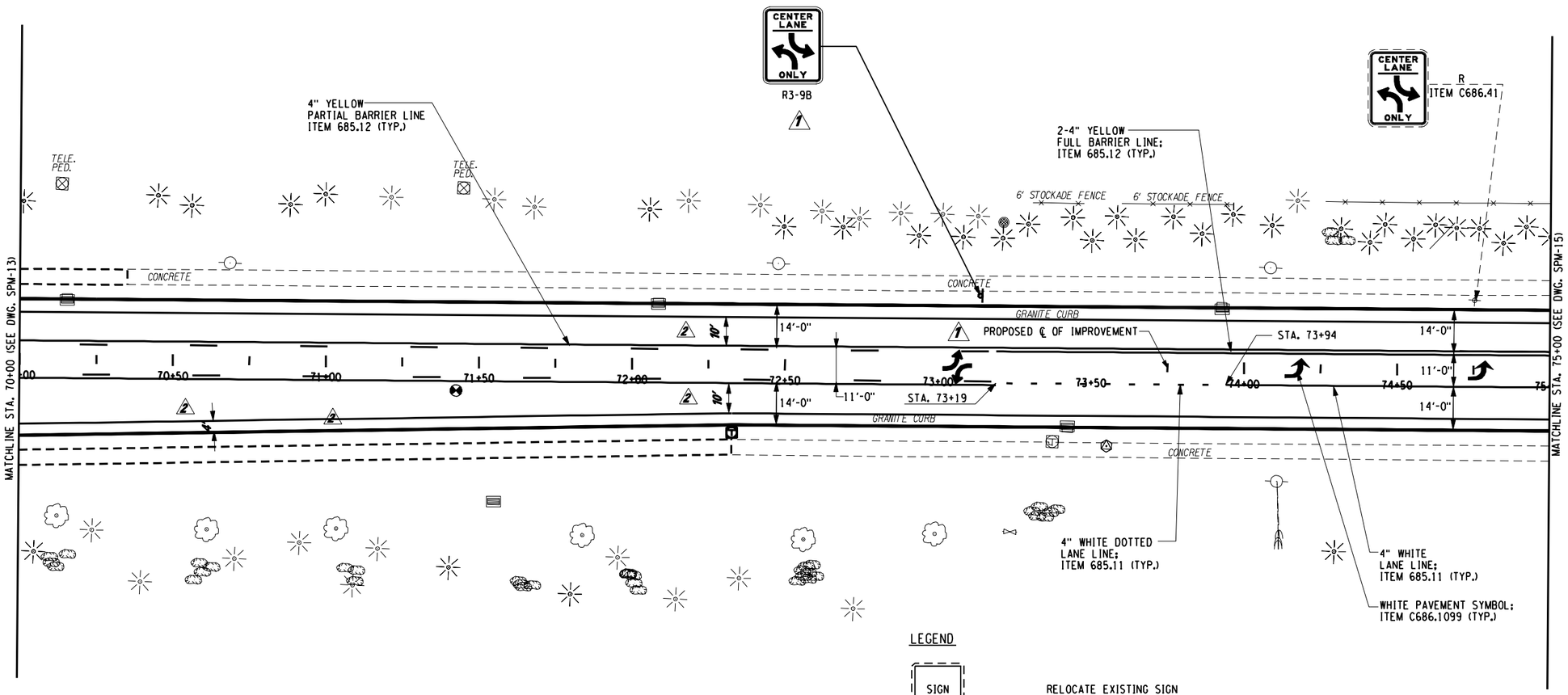

LEGEND

SIGN RR	RELOCATE EXISTING SIGN
	EXISTING SIGN
	PROPOSED SIGN
SIGN R	REMOVE EXISTING SIGN
SIGN	EXISTING SIGN TO REMAIN
SIGN (MUTCD NO.)	PROPOSED NEW SIGN

40' 0 40' 80'

NOTES

1. SEE SPM-1 FOR TRAFFIC SIGN NOTES.

NO.	DATE	BY:	REVISION
1	08/13	JMW	ADDED SIGN & SYMBOL
2	08/13	JMW	ADDED STRIPING

Barton & Loguidice, P.C.

DRAFTED BY: JMW/JJB
DESIGN BY: JMW

DEPARTMENT OF TRANSPORTATION
50 WEST MAIN STREET, SUITE 6100
ROCHESTER, NEW YORK 14614-1231

UNAUTHORIZED ALTERATION OR ADDITION TO THIS DRAWING IS A VIOLATION OF THE NEW YORK STATE EDUCATION LAW ARTICLE 145, SECTION 7209

PROJECT NAME: WESTFALL ROAD
LIMITS: E. HENRIETTA ROAD TO LAC-DE-VILLE BLVD
TOWN: BRIGHTON
CITY: ROCHESTER
CAPITAL PROJECT NO.: 4753.77
BRIDGE IDENTIFICATION NO.: N.A.

SIGNING & PAVEMENT MARKING PLAN
STA. 70+00 TO STA. 75+00

SCALE: AS SHOWN
DATE ISSUED: 4/25/2014
DRAWING NO. SPM-14
SHEET NO. 97 OF 112

mek
I:\MicroStation\Workspace\PLOT\NYSDOT\NYSDOT_SIZE_B.TBL
I:\MicroStation\Workspace\Plot\NYSDOT\NYSDOT_HPLJ5200_B.plt

FILE NAME = I:\Shared\1000\1066005\AS-BUILTS\1066005_spm_14.dgn
DATE = 4/25/2014
TIME = 10:52:56 AM

mek
I:\MicroStation\Workspace\PLOT\NYSDOT\NYSDOT_SIZE_B.TBL
I:\MicroStation\Workspace\Plot\NYSDOT\NYSDOT_HPLJ5200_B.plt

FILE NAME = I:\Shared\1000\1066005\AS-BUILTS\1066005_spm_15.dgn
DATE = 4/25/2014
TIME = 10:53:25 AM

"I hereby certify by my signature and seal below, that I have prepared this record drawing which is, to the best of my knowledge and in my professional opinion, a true representation of the work as constructed on the Westfall Road Improvements Phase III, Project No. 1409."

STATE OF NEW YORK · MATTHEW J. SCHOLEY · LICENSED PROFESSIONAL ENGINEER · No. 069983

GRID NORTH

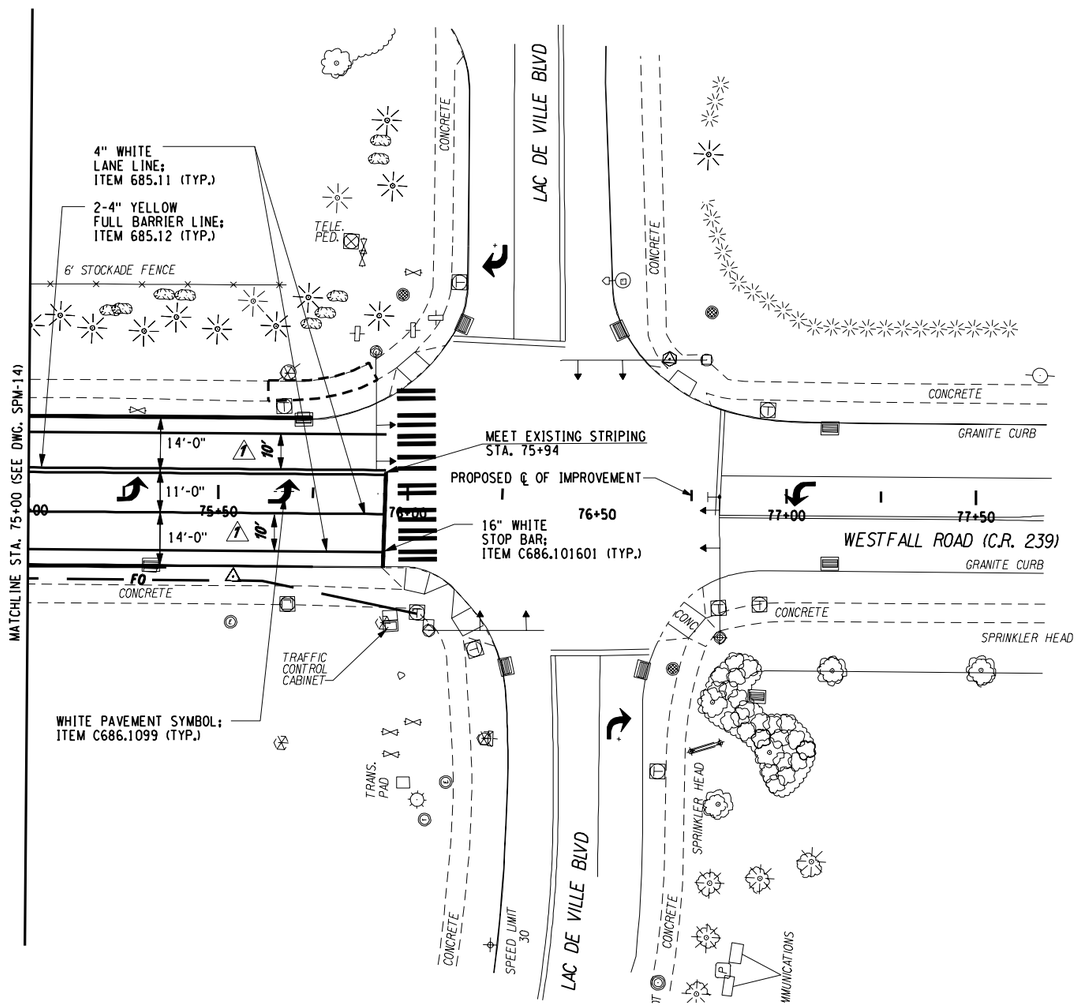

LEGEND

SIGN RR	RELOCATE EXISTING SIGN
	EXISTING SIGN
	PROPOSED SIGN
SIGN R	REMOVE EXISTING SIGN
SIGN	EXISTING SIGN TO REMAIN
SIGN	PROPOSED NEW SIGN

MUTCD NO.

40' 0 40' 80'

NOTES

1. SEE SPM-1 FOR TRAFFIC SIGN NOTES.

NO.	DATE	BY:	REVISION
1	10/13	JMW	ADDED STRIPING

Barton & Loguidice, P.C.

DRAFTED BY: JMW/JJB
DESIGN BY: JMW

DEPARTMENT OF TRANSPORTATION
50 WEST MAIN STREET, SUITE 6100
ROCHESTER, NEW YORK 14614-1231

UNAUTHORIZED ALTERATION OR ADDITION TO THIS DRAWING IS A VIOLATION OF THE NEW YORK STATE EDUCATION LAW ARTICLE 145, SECTION 7209

PROJECT NAME: WESTFALL ROAD
LIMITS: E. HENRIETTA ROAD TO LAC-DE-VILLE BLVD
TOWN: BRIGHTON
CITY: ROCHESTER
CAPITAL PROJECT NO.: 4753.77
BRIDGE IDENTIFICATION NO.: N.A.

SIGNING & PAVEMENT MARKING PLAN
STA. 75+00 TO STA. 77+68

SCALE: AS SHOWN
DATE ISSUED: 4/25/2014
DRAWING NO. SPM-15
SHEET NO. 98 OF 112

"I hereby certify by my signature and seal below, that I have prepared this record drawing which is, to the best of my knowledge and in my professional opinion, a true representation of the work as constructed on the Westfall Road Improvements Phase III, Project No. 1409."

STATE OF NEW YORK · MATTHEW J. SCHULTZ · LICENSED PROFESSIONAL ENGINEER · No. 069983

GRID NORTH

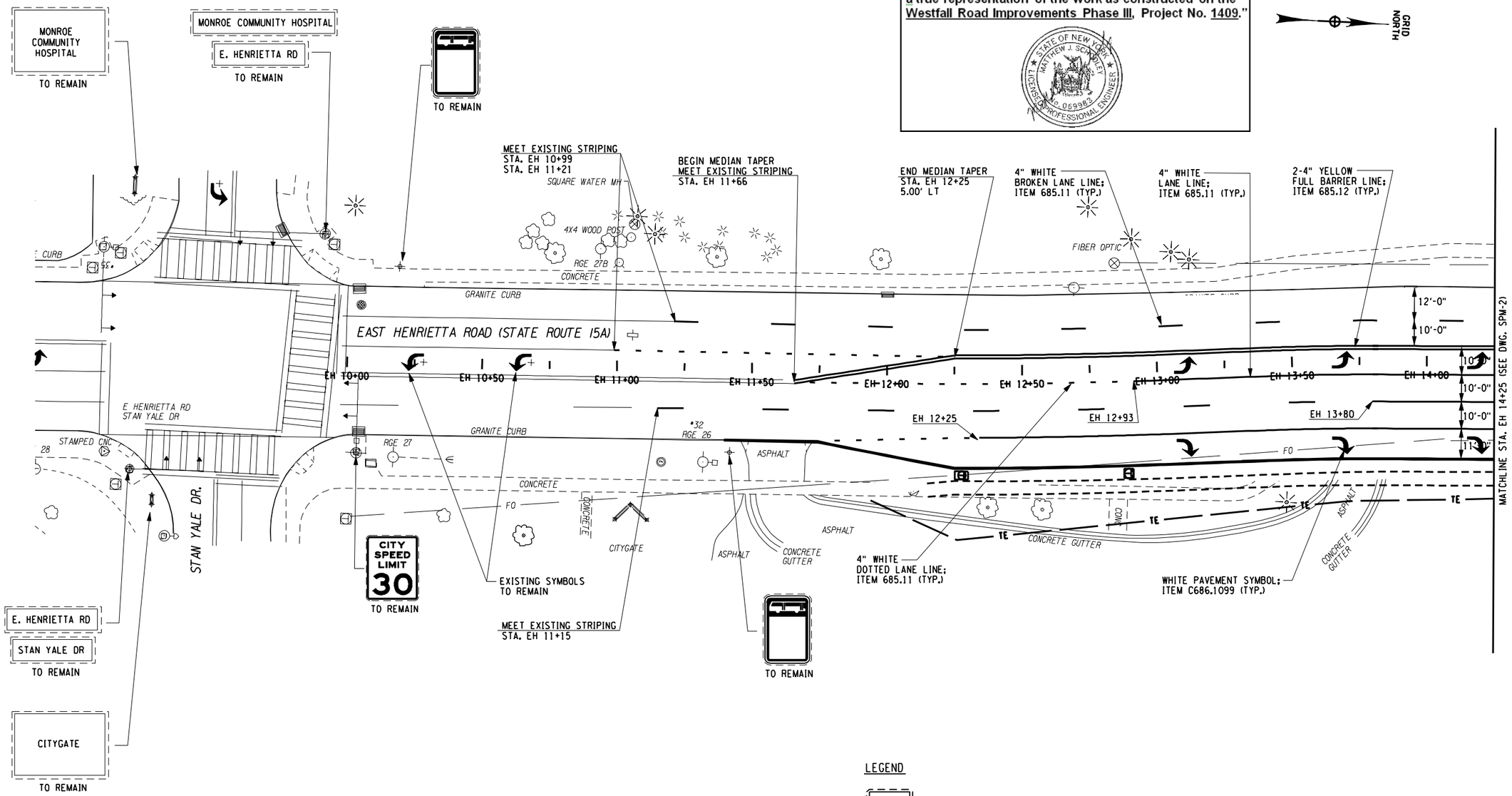

LEGEND

SIGN RR	RELOCATE EXISTING SIGN
	EXISTING SIGN
	PROPOSED SIGN
SIGN R	REMOVE EXISTING SIGN
SIGN	EXISTING SIGN TO REMAIN
SIGN MUTCD NO.	PROPOSED NEW SIGN

40' 0 40' 80'

NOTES

1. SEE SPM-1 FOR TRAFFIC SIGN NOTES.

NO.	DATE	BY:	REVISION

NO AS-BUILT REVISIONS

Barton & Loguidice, P.C.

DRAFTED BY: JMW/JJB
DESIGN BY: JMW

DEPARTMENT OF TRANSPORTATION
50 WEST MAIN STREET, SUITE 6100
ROCHESTER, NEW YORK 14614-1231

UNAUTHORIZED ALTERATION OR ADDITION TO THIS DRAWING IS A VIOLATION OF THE NEW YORK STATE EDUCATION LAW ARTICLE 145, SECTION 7209

PROJECT NAME
WESTFALL ROAD
LIMITS
E. HENRIETTA ROAD TO LAC-DE-VILLE BLVD
TOWN
BRIGHTON
CITY
ROCHESTER
CAPITAL PROJECT NO.
4753.77
BRIDGE IDENTIFICATION NO.
N.A.

SIGNING & PAVEMENT MARKING PLAN
STA. EH 10+00
TO STA. EH 14+25

SCALE: AS SHOWN
DATE ISSUED: 4/25/2014
DRAWING NO. SPM-16
SHEET NO. 99 OF 112

mek
I:\MicroStation\Workspace\PLOT\NYSDOT\NYSDOT_SIZE_B.TBL
I:\MicroStation\Workspace\Plot\NYSDOT\NYSDOT_HPLJ5200_B.plt

FILE NAME = I:\Shared\1000\10660005\AS-BUILTS\10660005_spm_16.dgn
DATE = 4/25/2014
TIME = 10:53:56 AM

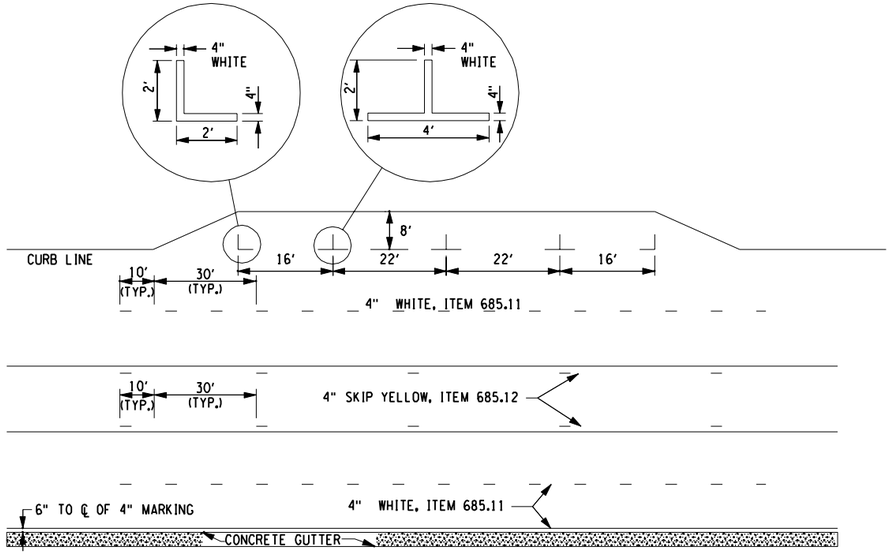

PAVEMENT MARKINGS - LONG LINES

NOT TO SCALE

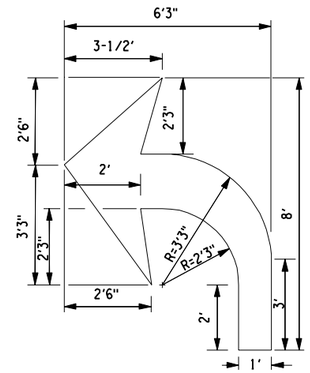

NOTE: DIMENSIONS ARE THE SAME FOR RIGHT ARROW REVERSED.

LEFT OR RIGHT TURN ARROW

ITEM C686.1009

NOT TO SCALE

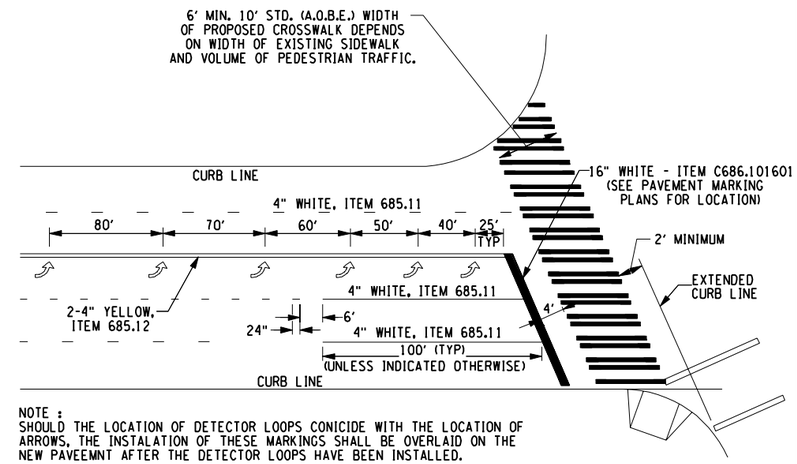

NOTE :
SHOULD THE LOCATION OF DETECTOR LOOPS CONICIDE WITH THE LOCATION OF ARROWS, THE INSTALATION OF THESE MARKINGS SHALL BE OVERLAID ON THE NEW PAVEEMNT AFTER THE DETECTOR LOOPS HAVE BEEN INSTALLED.

PAVEMENT MARKINGS AT INTERSECTION

NOT TO SCALE

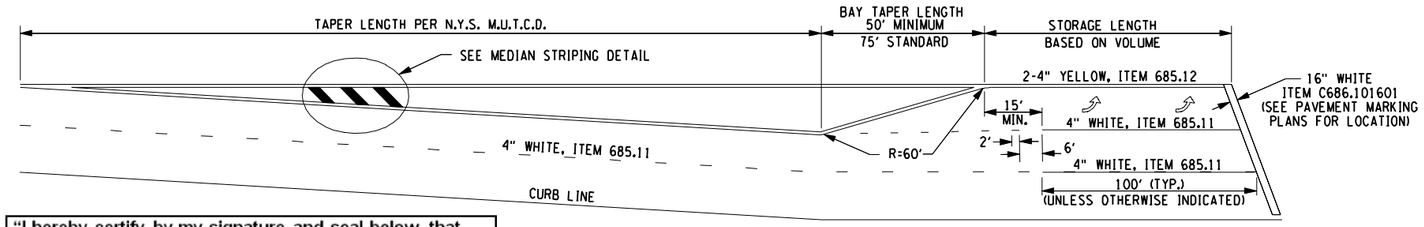

"I hereby certify by my signature and seal below, that I have prepared this record drawing which is, to the best of my knowledge and in my professional opinion, a true representation of the work as constructed on the Westfall Road Improvements Phase III, Project No. 1409."

STATE OF NEW YORK · MATTHEW J. SCHAFFER · LICENSED PROFESSIONAL ENGINEER · No. 059983

LEFT TURN LANE PAVEMENT MARKINGS

NOT TO SCALE

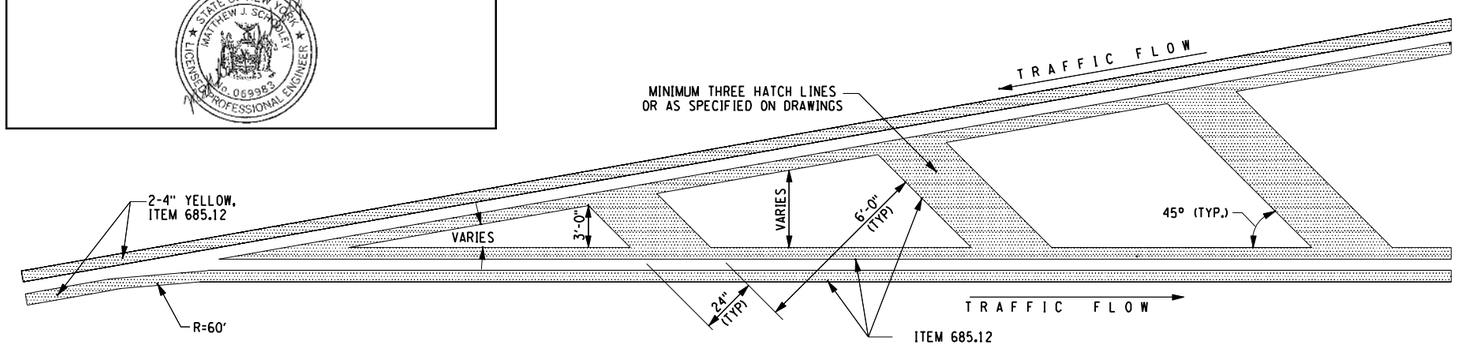

BEGINNING OF MEDIANS-STRIPING TREATMENT

NOT TO SCALE

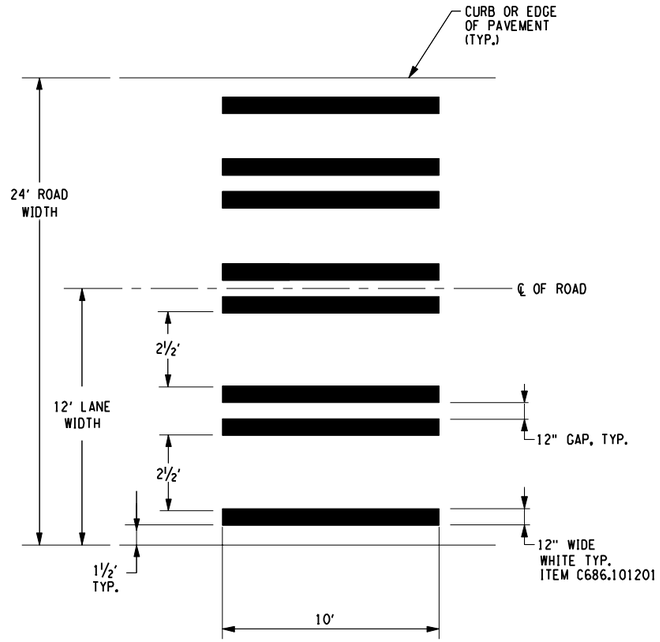

DOUBLE PIANO KEY CROSSWALK MARKING DETAIL

TWO WAY, 24' WIDE

NOT TO SCALE

NO.	DATE	BY:	REVISION

NO AS-BUILT REVISIONS

Barton & Loguidice, P.C.

DRAFTED BY: JMW/JJB
DESIGN BY: JMW

DEPARTMENT OF TRANSPORTATION
50 WEST MAIN STREET, SUITE 6100
ROCHESTER, NEW YORK 14614-1231

UNAUTHORIZED ALTERATION OR ADDITION TO THIS DRAWING IS A VIOLATION OF THE NEW YORK STATE EDUCATION LAW ARTICLE 145, SECTION 7209

PROJECT NAME: WESTFALL ROAD
LIMITS: E. HENRIETTA ROAD TO LAC-DE-VILLE BLVD
TOWN: BRIGHTON
CITY: ROCHESTER
CAPITAL PROJECT NO.: 4753.77
BRIDGE IDENTIFICATION NO.: N.A.

SIGNING & PAVEMENT MARKING DETAILS

SCALE: N.T.S.
DATE ISSUED: 4/25/2014
DRAWING NO. SPM-17
SHEET NO. 100 OF 112

mek
I:\MicroStation\Workspace\PLOT\NYSDOT\NYSDOT_SIZE_B.TBL
I:\MicroStation\Workspace\Plot\NYSDOT\NYSDOT_HPLJ5200_B.plt

FILE NAME = I:\Shared\1000\1066005\AS-BUILTS\1066005_spm_17.dgn
DATE = 4/25/2014
TIME = 10:54:37 AM

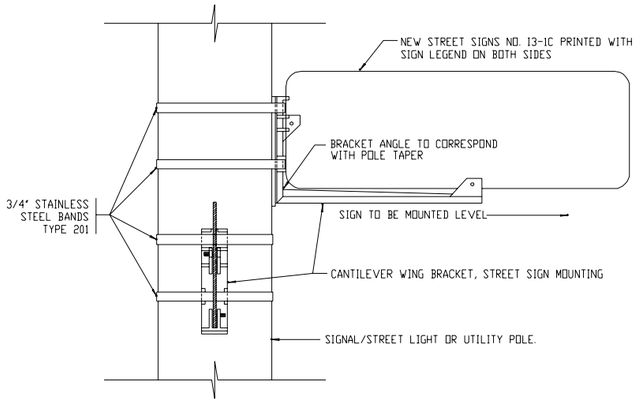

POLE MOUNTED STREET SIGN INSTALLATION
NOT TO SCALE

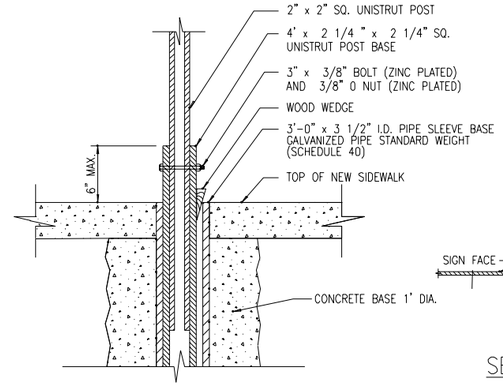

SECTION B – B
NOT TO SCALE

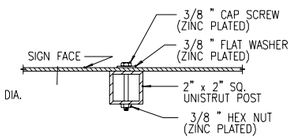

SECTION A – A
NOT TO SCALE

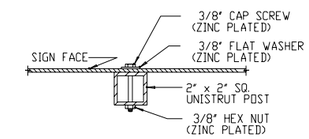

SECTION A – A
NOT TO SCALE

NOTE:
IF THERE IS ANY QUESTIONS REGUARDING THE FINAL, ACCEPTABLE LOCATION FOR A SIGN SLEEVE, PLEASE CALL MONROE COUNTY DOT AT 753-7750 AND REQUEST ASSISTANCE.

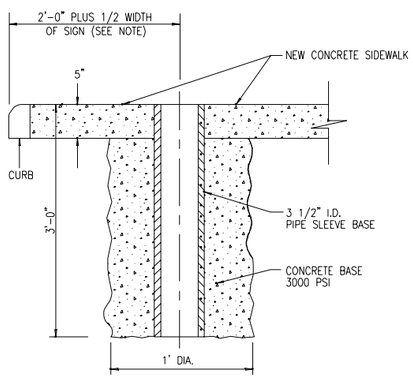

SIGN POST SLEEVE BASE INSTALLATION
NOT TO SCALE

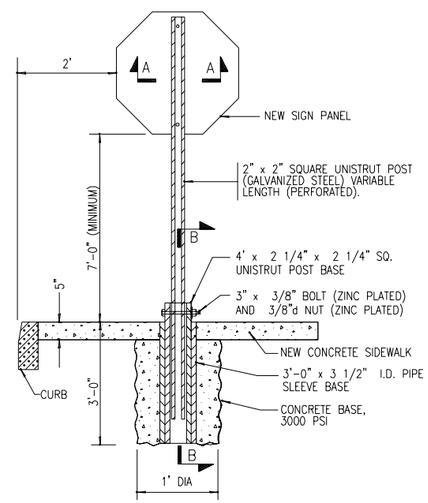

POST MOUNTED SIGN INSTALLATION IN CONCRETE
NOT TO SCALE

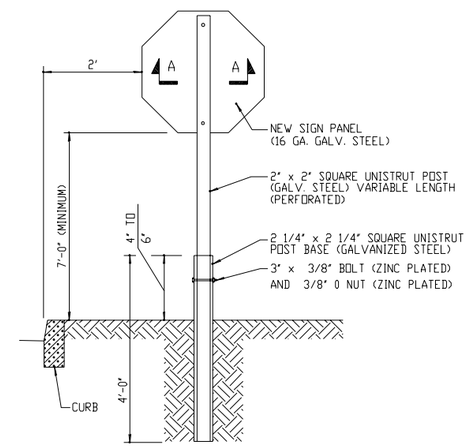

POST MOUNTED SIGN INSTALLATION IN SOIL
NOT TO SCALE

"I hereby certify by my signature and seal below, that I have prepared this record drawing which is, to the best of my knowledge and in my professional opinion, a true representation of the work as constructed on the Westfall Road Improvements Phase III, Project No. 1409."

NO.	DATE	BY:	REVISION
NO AS-BUILT REVISIONS			

Barton & Loguidice, P.C.

DRAFTED BY: JMW/JJB
DESIGN BY: JMW

DEPARTMENT OF TRANSPORTATION
50 WEST MAIN STREET, SUITE 6100
ROCHESTER, NEW YORK 14614-1231

UNAUTHORIZED ALTERATION OR ADDITION TO THIS DRAWING IS A VIOLATION OF THE NEW YORK STATE EDUCATION LAW ARTICLE 145, SECTION 7209

PROJECT NAME: WESTFALL ROAD
LIMITS: E. HENRIETTA ROAD TO LAC-DE-VILLE BLVD
TOWN: BRIGHTON
CITY: ROCHESTER
CAPITAL PROJECT NO.: 4753.77
BRIDGE IDENTIFICATION NO.: N.A.

SIGNING & PAVEMENT MARKING DETAILS

SCALE: N.T.S.
DATE ISSUED: 4/25/2014
DRAWING NO. SPM-18
SHEET NO. 101 OF 112

mek
I:\MicroStation\Workspace\PLOT\NYSDOT\NYSDOT_SIZE_B.TBL
I:\MicroStation\Workspace\Plot\NYSDOT\NYSDOT_HPLJ5200_B.plt

FILE NAME = I:\Shared\1000\1066005\AS-BUILTS\1066005_spm_18.dgn
DATE = 4/25/2014
TIME = 10:55:12 AM

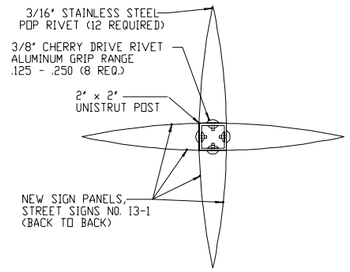

SECTION A - A

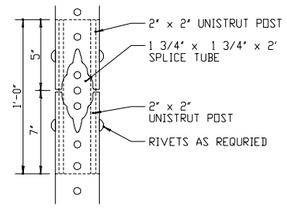

DETAIL A

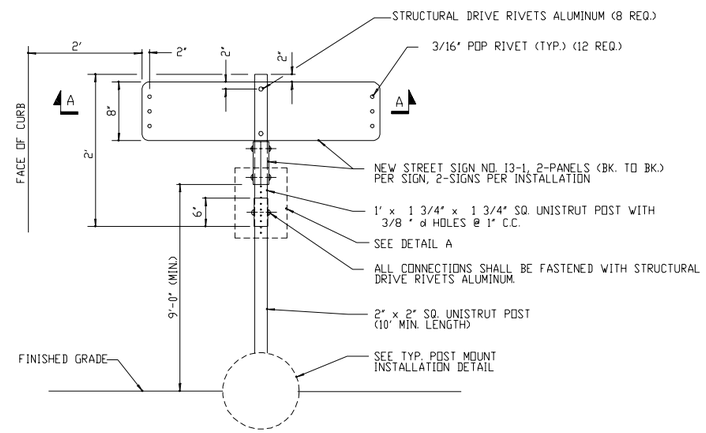

POST MOUNTED STREET SIGN INSTALLATION-SPECIAL

NOT TO SCALE

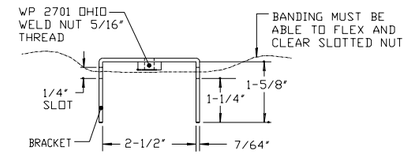

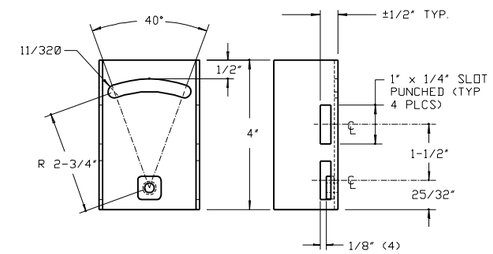

NOTES:

1. BRACKET TO BE BANDED TO THE MAST ARM WITH STAINLESS STEEL BANDING MATERIAL. (3/4" WIDE x .020 GAUGE)
2. BRACKETS SHALL BE 12 GAUGE GALVANIZED STEEL
3. SHORT BRACKET FOR STREET NAME SIGNS (USE 2 BANDS PER BRACKET)

MAST ARM SIGN BRACKET - SHORT

NOT TO SCALE

NOTES:

1. BRACKET TO BE BANDED TO THE MAST ARM WITH STAINLESS STEEL BANDING MATERIAL. (3/4" WIDE x 0.015" THICK)
2. BRACKET SHALL BE 12 GAUGE GALVANIZED STEEL
3. LONG BRACKET FOR LARGE SIGN (USE 4 BANDS PER BRACKET)

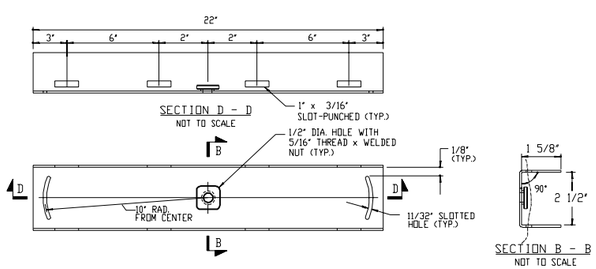

SECTION D - D

NOT TO SCALE

SECTION B - B

NOT TO SCALE

MAST ARM SIGN BRACKET-LONG

NOT TO SCALE

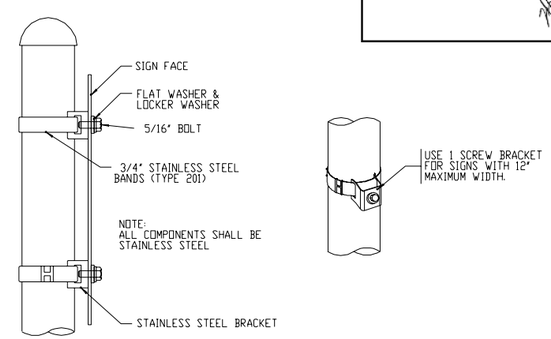

MOUNTING SIGN ON STEEL POLE

NOT TO SCALE

"I hereby certify by my signature and seal below, that I have prepared this record drawing which is, to the best of my knowledge and in my professional opinion, a true representation of the work as constructed on the Westfall Road Improvements Phase III, Project No. 1409."

STATE OF NEW YORK · MATTHEW J. SCHOLEY · LICENSED PROFESSIONAL ENGINEER · No. 069983

NO.	DATE	BY:	REVISION
NO AS-BUILT REVISIONS			

Barton & Loguidice, P.C.

DESIGN BY: JMW

DRAFTED BY: JMW/JJB

DEPARTMENT OF TRANSPORTATION
50 WEST MAIN STREET, SUITE 6100
ROCHESTER, NEW YORK 14614-1231

UNAUTHORIZED ALTERATION OR ADDITION TO THIS DRAWING IS A VIOLATION OF THE NEW YORK STATE EDUCATION LAW ARTICLE 145, SECTION 7209

PROJECT NAME: WESTFALL ROAD

LIMITS: E. HENRIETTA ROAD TO LAC-DE-VILLE BLVD

TOWN: BRIGHTON

CITY: ROCHESTER

CAPITAL PROJECT NO.: 4753.77

BRIDGE IDENTIFICATION NO.: N.A.

SIGNING & PAVEMENT MARKING DETAILS

SCALE: N.T.S.

DATE ISSUED: 4/25/2014

DRAWING NO. SPM-19

SHEET NO. 102 OF 112

mek
I:\MicroStation\Workspace\PLOT\NYSDOT\NYSDOT_SIZE_B.TBL
I:\MicroStation\Workspace\Plot\NYSDOT\NYSDOT_HPLJ5200_B.plt

FILE NAME = I:\Shared\1000\1066005\AS-BUILTS\1066005_spm_19.dgn
DATE = 4/25/2014
TIME = 10:55:44 AM

"I hereby certify by my signature and seal below, that I have prepared this record drawing which is, to the best of my knowledge and in my professional opinion, a true representation of the work as constructed on the Westfall Road Improvements Phase III, Project No. 1409."

STATE OF NEW YORK · MATTHEW J. SCHOLLE · NO. 089983 · LICENSED PROFESSIONAL ENGINEER

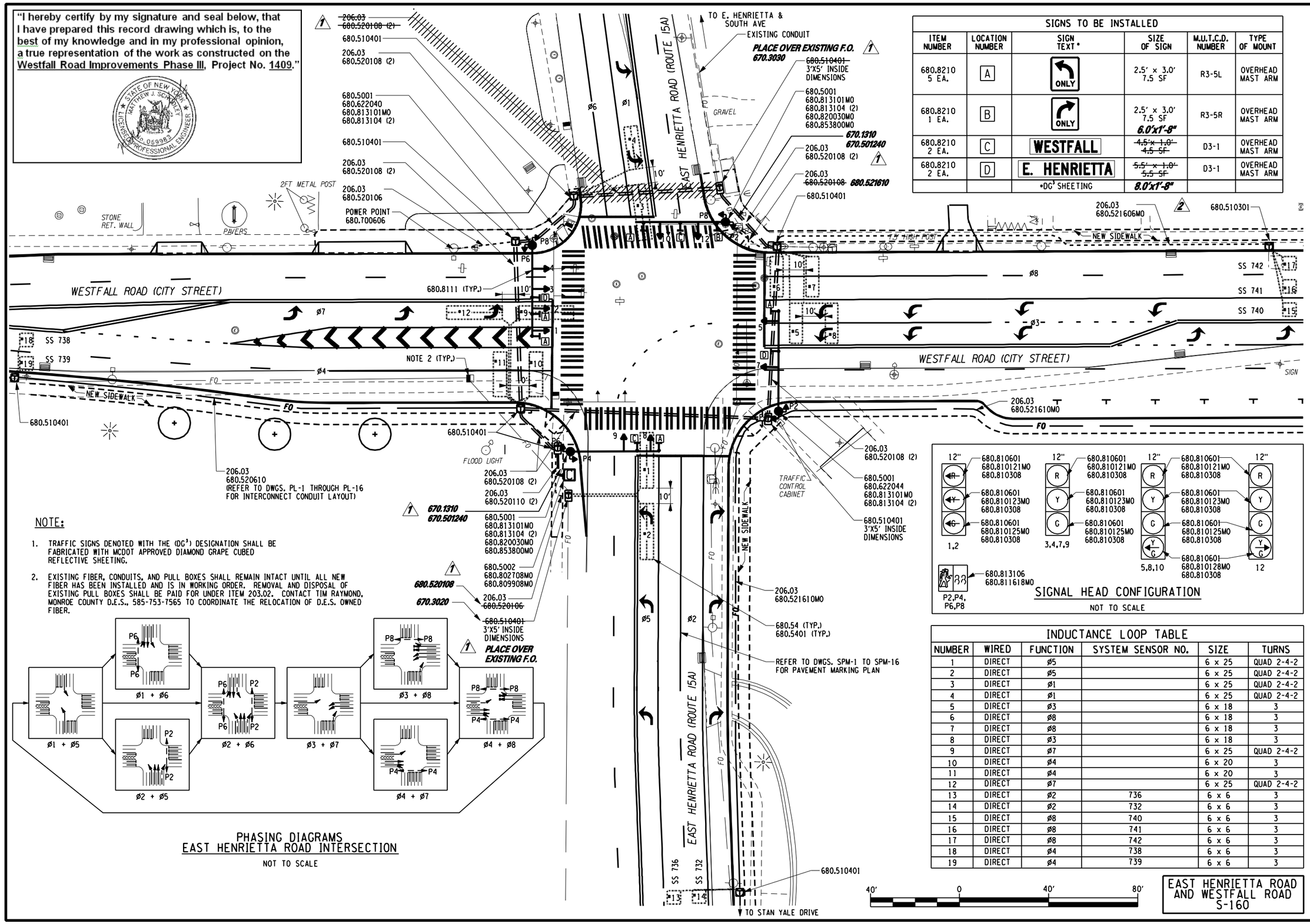

NOTE:

1. TRAFFIC SIGNS DENOTED WITH THE (DG^3) DESIGNATION SHALL BE FABRICATED WITH MCDOT APPROVED DIAMOND GRAPE CUBED REFLECTIVE SHEETING.
2. EXISTING FIBER, CONDUITS, AND PULL BOXES SHALL REMAIN INTACT UNTIL ALL NEW FIBER HAS BEEN INSTALLED AND IS IN WORKING ORDER. REMOVAL AND DISPOSAL OF EXISTING PULL BOXES SHALL BE PAID FOR UNDER ITEM 203.02. CONTACT TIM RAYMOND, MONROE COUNTY D.E.S., 585-753-7565 TO COORDINATE THE RELOCATION OF D.E.S. OWNED FIBER.

PHASING DIAGRAMS
EAST HENRIETTA ROAD INTERSECTION

NOT TO SCALE

SIGNS TO BE INSTALLED					
ITEM NUMBER	LOCATION NUMBER	SIGN TEXT *	SIZE OF SIGN	M.U.T.C.D. NUMBER	TYPE OF MOUNT
680.8210 5 EA.	A	ONLY	2.5' x 3.0' 7.5 SF	R3-5L	OVERHEAD MAST ARM
680.8210 1 EA.	B	ONLY	2.5' x 3.0' 7.5 SF **6.0'x1'-8"**	R3-5R	OVERHEAD MAST ARM
680.8210 2 EA.	C	WESTFALL	~~4.5' x 1.0'~~ ~~4.5 SF~~	D3-1	OVERHEAD MAST ARM
680.8210 2 EA.	D	E. HENRIETTA	~~5.5' x 1.0'~~ ~~5.5 SF~~	D3-1	OVERHEAD MAST ARM
		*DG^3 SHEETING	**8.0'x1'-8"**		

SIGNAL HEAD CONFIGURATION

NOT TO SCALE

INDUCTANCE LOOP TABLE					
NUMBER	WIRED	FUNCTION	SYSTEM SENSOR NO.	SIZE	TURNS
1	DIRECT	ø5		6 x 25	QUAD 2-4-2
2	DIRECT	ø5		6 x 25	QUAD 2-4-2
3	DIRECT	ø1		6 x 25	QUAD 2-4-2
4	DIRECT	ø1		6 x 25	QUAD 2-4-2
5	DIRECT	ø3		6 x 18	3
6	DIRECT	ø8		6 x 18	3
7	DIRECT	ø8		6 x 18	3
8	DIRECT	ø3		6 x 18	3
9	DIRECT	ø7		6 x 25	QUAD 2-4-2
10	DIRECT	ø4		6 x 20	3
11	DIRECT	ø4		6 x 20	3
12	DIRECT	ø7		6 x 25	QUAD 2-4-2
13	DIRECT	ø2	736	6 x 6	3
14	DIRECT	ø2	732	6 x 6	3
15	DIRECT	ø8	740	6 x 6	3
16	DIRECT	ø8	741	6 x 6	3
17	DIRECT	ø8	742	6 x 6	3
18	DIRECT	ø4	738	6 x 6	3
19	DIRECT	ø4	739	6 x 6	3

40' 0 40' 80'

EAST HENRIETTA ROAD AND WESTFALL ROAD S-160

NO.	DATE	BY:	REVISION
1	10/17	JMW	DELETED CONDUIT
2	10/17	JMW	SIGN DIMENSION

Barton & Loguidice, P.C.

DRAFTED BY: JMW/JJB
DESIGN BY: JMW

DEPARTMENT OF TRANSPORTATION
50 WEST MAIN STREET, SUITE 6100
ROCHESTER, NEW YORK 14614-1231

UNAUTHORIZED ALTERATION OR ADDITION TO THIS DRAWING IS A VIOLATION OF THE NEW YORK STATE EDUCATION LAW ARTICLE 145, SECTION 7209

PROJECT NAME: WESTFALL ROAD
LIMITS: E. HENRIETTA ROAD TO LAC-DE-VILLE BLVD
TOWN: BRIGHTON
CITY: ROCHESTER
CAPITAL PROJECT NO.: 4753.77
BRIDGE IDENTIFICATION NO.: N.A.

TRAFFIC SIGNAL PLAN

SCALE: AS SHOWN
DATE ISSUED: 4/25/2014
DRAWING NO. TSP-1
SHEET NO. 103 OF 112

mek
I:\MicroStation\Workspace\PLOT\NYSDOT\NYSDOT_SIZE_B.TBL
I:\MicroStation\Workspace\Plot\NYSDOT\NYSDOT_HPLJ5200_B.plt

FILE NAME = L:\Shared\1000\1066005\AS-BUILTS\1066005_tsP_01.dgn
DATE = 4/25/2014
TIME = 10:56:32 AM

TABLE OF ITEM NUMBERS

ITEM NUMBER	DESCRIPTION	UNIT	QUANTITY
206.03	CONDUIT EXCAVATION AND BACKFILL INCLUDING SURFACE RESTORATION	LF	1541
619.1611	MAINTAIN TRAFFIC SIGNAL EQUIPMENT (REQUIREMENT A)	INT. MO.	6
680.5001	POLE EXCAVATION AND CONCRETE FOUNDATION	CY	17
680.5002	CONCRETE BASE FOR CONTROLLER CABINET	EACH	1
680.510301	PULLBOX - CIR., 24 IN. DIA., REINF. CONCRETE	EACH	1
680.510401	PULLBOX - CIR., 30 IN. DIA., REINF. CONCRETE	EACH	9
680.520106	CONDUIT, METAL STEEL ZINC COATED - CLASS 1, 2 IN. DIA.	LF	30
680.520108	CONDUIT, METAL STEEL ZINC COATED - CLASS 1, 3 IN. DIA.	LF	730
680.520110	CONDUIT, METAL STEEL ZINC COATED, 4 NPS	LF	80
680.622040	TRAFFIC SIGNAL POLE - MAST ARM, 20' MOUNTING HEIGHT, 40' ARM LENGTH	EACH	1
680.622044	TRAFFIC SIGNAL POLE - MAST ARM, 20' MOUNTING	EACH	1
	HEIGHT, 44' ARM LENGTH, 30' SIGNAL POLE HEIGHT		
680.700606	RISER ASSEMBLY, 2 IN. DIA.	EACH	1
680.730714	SIGNAL CABLE, 7 CONDUCTORS, 14 AWG	LF	1120
680.730914	SIGNAL CABLE, 9 CONDUCTORS, 14 AWG	LF	730
680.521606MO	2" PVC SCHEDULE 80 CONDUIT	LF	260
680.521610MO	4" PVC SCHEDULE 80 CONDUIT	LF	500
680.54	INDUCTANCE LOOP INSTALLATION & SEALING	LF	1535
680.71	SHIELDED LEAD-IN CABLE	LF	6355
680.72	INDUCTANCE LOOP WIRE	LF	3230
680.79000010	REMOVE TRAFFIC SIGNAL EQUIPMENT	LS	1
680.802708MO	INSTALL 8 PHASE ACTUATED GROUND MOUNTED TRAFFIC SIGNAL CABINET	EACH	1
	RELATED EQUIPMENT		
680.809908MO	8 PHASE ACTUATED GROUND MOUNTED TRAFFIC SIGNAL	EACH	1
	CONTROLLER & CABINET (PURCHASED FROM MCDOT)		
680.810601	TRAFFIC SIGNAL SECTION, POLYCARBONATE, TYPE 1, 12"	EACH	34
680.810121MO	TRAFFIC SIGNAL MODULE - 12", RED BALL, LED	EACH	10
680.810123MO	TRAFFIC SIGNAL MODULE - 12", YELLOW BALL, LED	EACH	10
680.810125MO	TRAFFIC SIGNAL MODULE - 12", GREEN BALL, LED	EACH	10
680.810128MO	12" BI-MODAL ARROW, YELLOW/GREEN	EACH	4
680.810308	INSTALL LED BALL/ARROW TRAFFIC SIGNAL MODULE	EACH	34
680.8111	RIGID MOUNT SIGNAL BRACKET ASSEMBLY	EACH	10
680.811618MO	16"x18" BI-MODAL PEDESTRIAN SIGNAL, HAND/MAN, WITH COUNTDOWN	EACH	8
680.813101MO	PEDESTRIAN PUSH BUTTON WITH SIGN	EACH	4
680.813104	INSTALL LED SIGNAL PEDESTRIAN MODULE	EACH	8
680.813106	PEDESTRIAN SIGNAL SECTION - POLYCARBONATE, TYPE 1, 12 INCH	EACH	8
680.820030MO	MAST ARM TRAFFIC SIGNAL POLE COMBINATION ANCHOR BASE (30')	EACH	2
680.8210	OVERHEAD SIGNS ASSEMBLY	EACH	10
680.853800MO	MAST ARM TRAFFIC SIGNAL, 40 FT LENGTH	EACH	2
680.95020615	SERVICE CABLE, 2 CONDUCTOR, 6 AWG	LF	140
680.995101MO	FIBER OPTIC CABLE (PURCHASED FROM MCDOT)	LF	670
680.996101MO	INSTALL FIBER OPTIC CABLE (FURNISHED)	LF	670

TABLE OF CLEARANCES

TO	FROM				
	R	G	~~G~~	~~G~~	~~R~~
R	R	Y	~~Y~~	~~Y~~	-
	R	R	R	R	-
G	R	G	~~Y~~	~~Y~~	-
	R	G	G	G	-
~~G~~	R	G	~~G~~	-	-
	R	G	~~G~~	-	-
~~G~~	R	G	-	~~G~~	~~R~~
	R	G	-	~~G~~	~~R~~
~~R~~	-	-	-	~~Y~~	~~R~~
	-	-	-	~~R~~	~~R~~

TABLE OF OPERATIONS - EAST HENRIETTA ROAD INTERSECTION

PHASE	FACE 1	2	3	4	5	7	8	9	10	12	PED P2	PED P4	PED P6	PED P8
Ø1 + Ø5	~~R~~	~~R~~	R	R	R	R	R ~~G~~	R	R ~~G~~	R	HAND	HAND	HAND	HAND
Ø1 + Ø6	~~R~~	~~R~~	R	R	R	R	G ~~G~~	G	R	R	HAND	HAND	PERSON[2]	HAND
Ø2 + Ø5	~~R~~	~~R~~	R	R	R	R	R	R	G ~~G~~	G	PERSON[2]	HAND	HAND	HAND
Ø2 + Ø6	~~R~~	~~R~~	R	R	R	R	G	G	G	G	PERSON[2]	HAND	PERSON[2]	HAND
Ø3 + Ø7	~~G~~	~~G~~	R	R	R ~~G~~	R	R	R	R	R ~~G~~	HAND	HAND	HAND	HAND
Ø3 + Ø8	~~G~~	~~G~~	G	G	R	R	R	R	R	R	HAND	HAND	HAND	PERSON[1]
Ø4 + Ø7	~~R~~	~~R~~	R	R	G ~~G~~	G	R	R	R	R	HAND	PERSON[1]	HAND	HAND
Ø4 + Ø8	~~R~~	~~R~~	G	G	G	G	R	R	R	R	HAND	PERSON[1]	HAND	PERSON[1]
FLASHING	FR	FR	FR	FR	FR	FR	FR	FR	FR	FR	DARK	DARK	DARK	DARK
DISPLAY														
ALL LENSES SHALL BE 12" IN DIA.	~~R~~ ~~Y~~ ~~G~~	~~R~~ ~~Y~~ ~~G~~	R Y G	R Y G	R Y G ~~G~~	R Y G	R Y G ~~G~~	R Y G	R Y G ~~G~~	R Y G ~~G~~	HAND	SS	HAND	SS	HAND	SS	HAND	SS

1. THIS INDICATION SHALL BE A STEADY "WALKING PERSON" SYMBOL FOLLOWED BY A FLASHING "HAND" SYMBOL CLEARANCE INTERVAL, THEN A STEADY "HAND SYMBOL" WHEN THE ASSOCIATED PEDESTRIAN BUTTON IS ACTIVATED.

2. THIS INDICATION SHALL BE A STEADY "WALKING PERSON" SYMBOL FOLLOWED BY A FLASHING "HAND" SYMBOL CLEARANCE INTERVAL, THEN A STEADY "HAND SYMBOL".

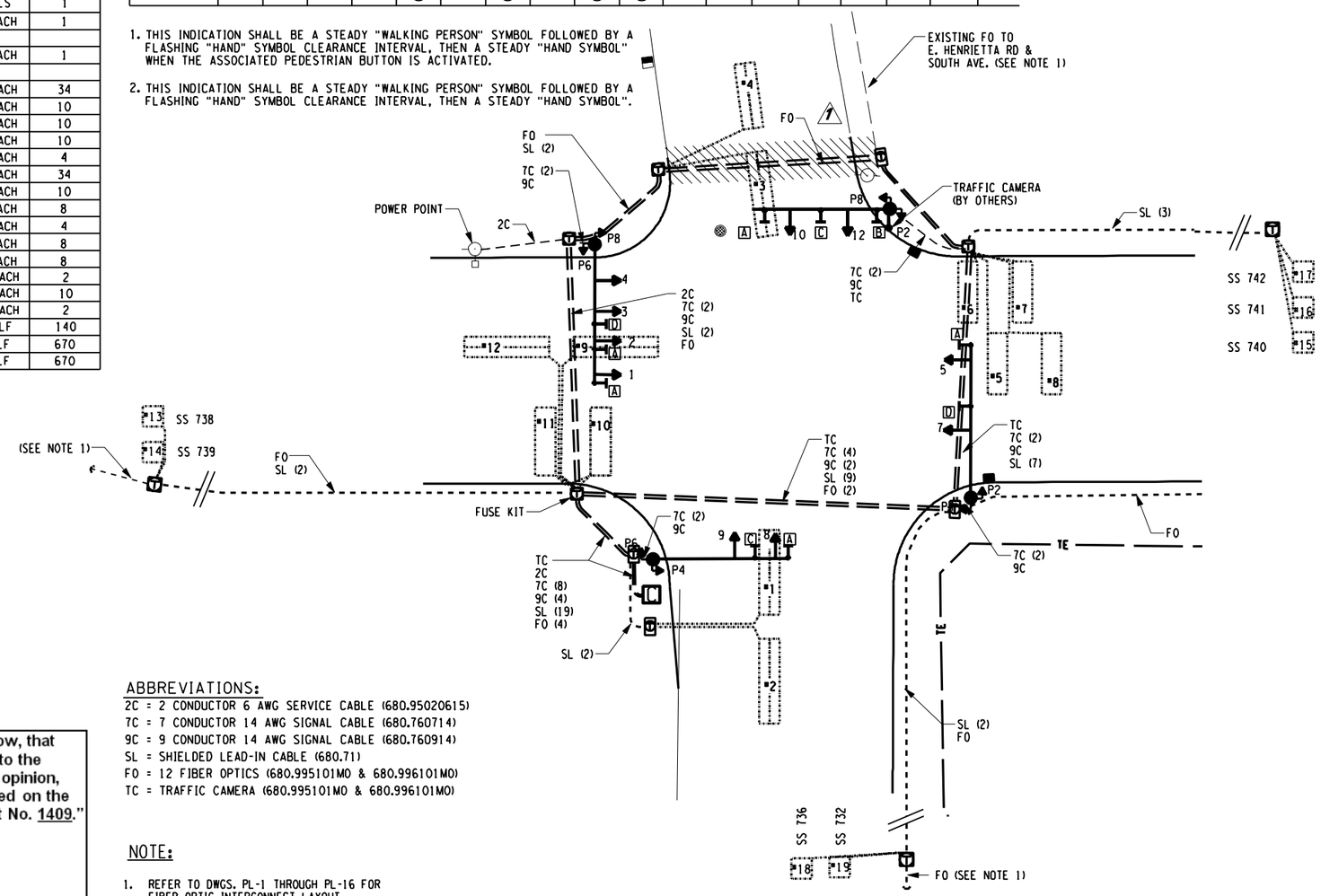

WIRING DIAGARAM
EAST HENRIETTA ROAD INTERSECTION

NOT TO SCALE

ABBREVIATIONS:

2C = 2 CONDUCTOR 6 AWG SERVICE CABLE (680.95020615)
7C = 7 CONDUCTOR 14 AWG SIGNAL CABLE (680.760714)
9C = 9 CONDUCTOR 14 AWG SIGNAL CABLE (680.760914)
SL = SHIELDED LEAD-IN CABLE (680.71)
FO = 12 FIBER OPTICS (680.995101MO & 680.996101MO)
TC = TRAFFIC CAMERA (680.995101MO & 680.996101MO)

NOTE:

1. REFER TO DWGS. PL-1 THROUGH PL-16 FOR FIBER OPTIC INTERCONNECT LAYOUT.

"I hereby certify by my signature and seal below, that I have prepared this record drawing which is, to the best of my knowledge and in my professional opinion, a true representation of the work as constructed on the Westfall Road Improvements Phase III, Project No. 1409."

STATE OF NEW YORK · MATTHEW J. SCHOLEY · LICENSED PROFESSIONAL ENGINEER · No. 069983

EAST HENRIETTA ROAD AND WESTFALL ROAD
S-160

NO.	DATE	BY:	REVISION
1	06/03	JJW	DELETED CONDUIT

Barton & Loguidice, P.C.

DRAFTED BY: JMW/JJB
DESIGN BY: JMW

DEPARTMENT OF TRANSPORTATION
50 WEST MAIN STREET, SUITE 6100
ROCHESTER, NEW YORK 14614-1231

UNAUTHORIZED ALTERATION OR ADDITION TO THIS DRAWING IS A VIOLATION OF THE NEW YORK STATE EDUCATION LAW ARTICLE 145, SECTION 7209

PROJECT NAME: WESTFALL ROAD
LIMITS: E. HENRIETTA ROAD TO LAC-DE-VILLE BLVD
TOWN: BRIGHTON
CITY: ROCHESTER
CAPITAL PROJECT NO.: 4753.77
BRIDGE IDENTIFICATION NO.: N.A.

TRAFFIC SIGNAL PLAN

SCALE: AS SHOWN
DATE ISSUED: 4/25/2014
DRAWING NO. TSP-2
SHEET NO. 104 OF 112

mek
I:\MicroStation\Workspace\PLOT\NYSDOT\NYSDOT_SIZE_B.TBL
I:\MicroStation\Workspace\Plot\NYSDOT\NYSDOT_HPLJ5200_B.plt

FILE NAME = L:\Shared\1000\1066005\AS-BUILTS\1066005_tsp_02.dgn
DATE = 4/25/2014
TIME = 10:56:59 AM

TABLE OF OPERATIONS - SAWGRASS DRIVE INTERSECTION

PHASE	FACE 1	2	3	4	5	6	7	8	PED P2	PED P4	PED P6	PED P8
Ø2 + Ø6	G	G	G	G	R	R	R	R	PERSON²	HAND	PERSON²	HAND
Ø4 + Ø8	R	R	R	R	G	G	G	G	HAND	PERSON¹	HAND	PERSON¹
FLASHING	FY	FY	FY	FY	FR	FR	FR	FR	DARK	DARK	DARK	DARK
DISPLAY												
ALL LENSES SHALL BE 12" IN DIA.	R Y G	R Y G	R Y G	R Y G	R Y G	R Y G	R Y G	R Y G	SS	SS	SS	SS

1. THIS INDICATION SHALL BE A STEADY "WALKING PERSON" SYMBOL FOLLOWED BY A FLASHING "HAND" SYMBOL CLEARANCE INTERVAL, THEN A STEADY "HAND SYMBOL" WHEN THE ASSOCIATED PEDESTRIAN BUTTON IS ACTIVATED.

2. THIS INDICATION SHALL BE A STEADY "WALKING PERSON" SYMBOL FOLLOWED BY A FLASHING "HAND" SYMBOL CLEARANCE INTERVAL, THEN A STEADY "HAND SYMBOL".

INDUCTANCE LOOP TABLE

NUMBER	WIRED	FUNCTION	SYSTEM SENSOR NO.	SIZE	TURNS
1	DIRECT	Ø4		6' x 26'	QUAD 2-4-2
2	DIRECT	Ø4		6' x 20'	QUAD 2-4-2
3	DIRECT	Ø4		6' x 20'	QUAD 2-4-2
4	DIRECT	Ø4		6' x 20'	QUAD 2-4-2
5	DIRECT	Ø8		6' x 20'	QUAD 2-4-2
6	DIRECT	Ø8		6' x 26'	QUAD 2-4-2
7	DIRECT	Ø8		6' x 20'	QUAD 2-4-2
8	DIRECT	Ø8		6' x 20'	QUAD 2-4-2
9	DIRECT	Ø6	744	6' x 6'	3
10	DIRECT	Ø2	743	6' x 6'	3

SIGNS TO BE INSTALLED

ITEM NUMBER	LOCATION TEXT	SIGN TEXT*	SIZE OF SIGN	M.U.T.C.D. NUMBER	TYPE OF MOUNT
680.8210 3 EA.	A	ONLY	2.5' x 3.0' 7.5 SF	R3-5L	OVERHEAD MAST ARM
680.8210 2 EA.	B	ONLY	2.5' x 3.0' 7.5 SF 6.0'x1'-8"	R3-5R	OVERHEAD MAST ARM
680.8210 1 EA.	C	← SAWGRASS	~~6.0' x 1.0' 6.0 SF~~	D3-1	OVERHEAD MAST ARM
680.8210 1 EA.	D	SAWGRASS →	~~6.0' x 1.0' 6.0 SF~~	D3-1	OVERHEAD MAST ARM
*DG³ SHEETING (SEE NOTE 2)			6.0'x1'-8"		

2

TABLE OF CLEARANCES

TO	FROM R	FROM G
R	R	Y
	R	R
G	R	G
	R	G

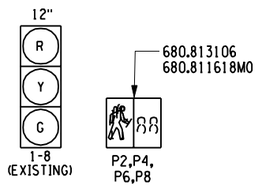

SIGNAL HEAD CONFIGURATION

NOT TO SCALE

TABLE OF

ITEM NUMBER	DESCRIPTION		
206.03	TRAFFIC SIGNAL CONDUIT EXCAVAT		
619.1611	MAINTAIN TRAFFIC SIGNAL EQUIPM		
680.5001	POLE EXCAVATION AND CONCRETE		
680.51000010	ADJUST FRAMES & COVERS (PULLB		
680.510401	PULLBOX - CIR., 30 IN. DIA., REIN		
680.520106	CONDUIT, METAL STEEL ZINC COAT		
680.520108	CONDUIT, METAL STEEL ZINC COAT		
680.54	INDUCTANCE LOOP INSTALLATION &		
680.540~~1~~ 72	INDUCTANCE LOOP WIRE		
680.700606	RISER ASSEMBLY, 2 IN. DIA.		
680.71	SHIELDED LEAD-IN CABLE		
680.730714	SIGNAL CABLE, 7 CONDUCTORS, 14 AWG	LF	945
680.730914	SIGNAL CABLE, 9 CONDUCTORS, 14 AWG	LF	130
680.78010005	ALTER PULBOX FOR CONDUITS	EACH	7
680.811618MO	16"x18" BI-MODAL PEDESTRIAN SIGNAL, HAND/MAN, WITH COUNTDOWN	EACH	8
680.813101MO	PEDESTRIAN PUSH BUTTON WITH SIGN	EACH	2
680.813104	INSTALL LED SIGNAL PEDESTRIAN MODULE	EACH	8
680.813106	PEDESTRIAN SIGNAL SECTION, POLYCARBONATE, TYPE 1, 12 INCH	EACH	8
680.8210	OVERHEAD SIGN ASSEMBLY, TYPE J	EACH	7
680.83010005	CLEANING AND PREPARING EXSTING UNDERGROUND CONDUIT	LF	320
680.90010006	RELOCATE EXISTING SIGNAL POLE	EACH	1
680.95020615	SERVICE CABLE, 2 CONDUCTOR, 6 AWG	LF	115
680.995101MO	FIBER OPTIC CABLE (PURCHASED FROM MCDOT)	LF	400
680.995600MO	ROD AND CLEAN CONDUIT	LF	905
680.996101MO	INSTALL FIBER OPTIC CABLE (FURNISHED BY MCDOT)	LF	400

"I hereby certify by my signature and seal below, that I have prepared this record drawing which is, to the best of my knowledge and in my professional opinion, a true representation of the work as constructed on the Westfall Road Improvements Phase III, Project No. 1409."

STATE OF NEW YORK · MATTHEW J. SCHOLTZ · LICENSED PROFESSIONAL ENGINEER · NO. 069983

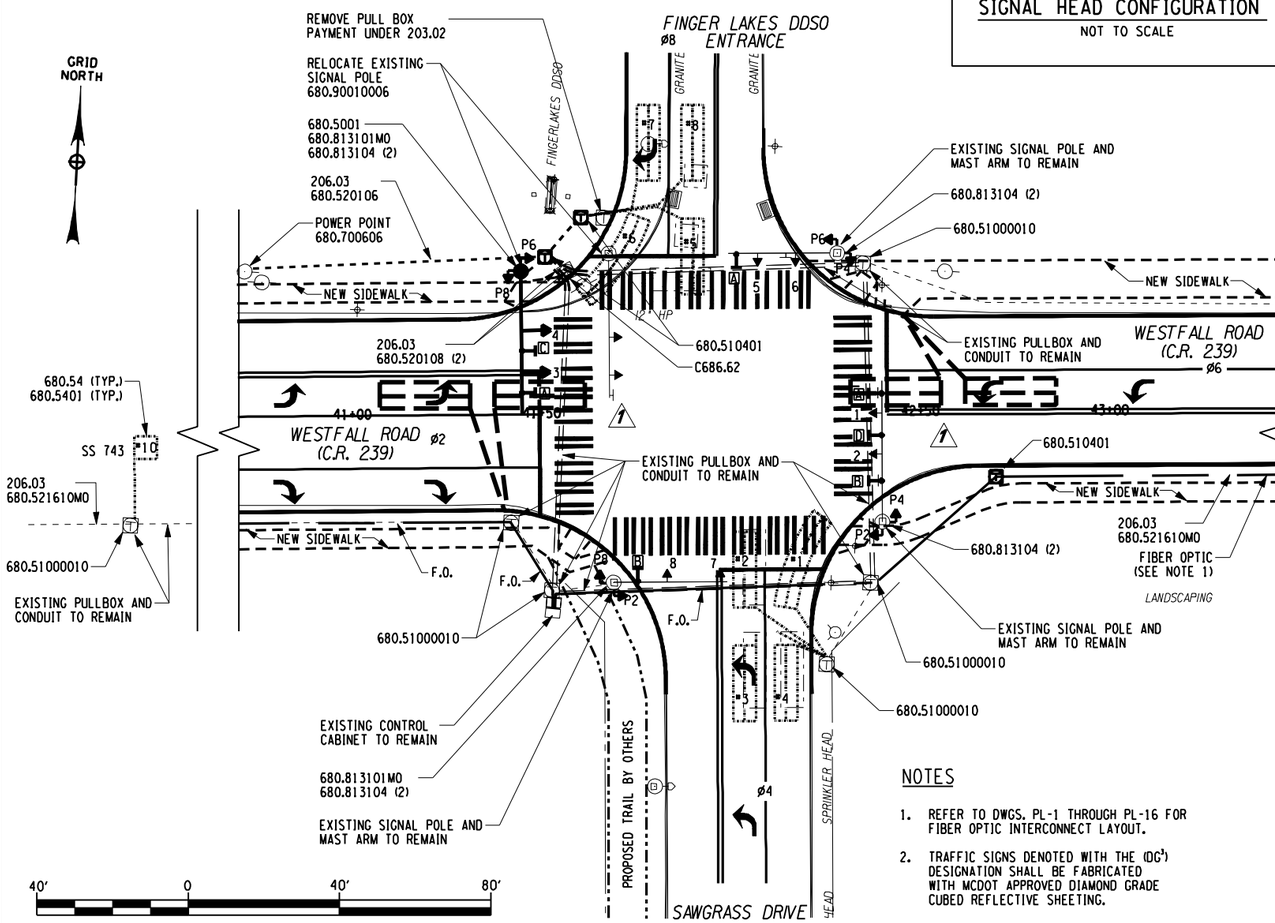

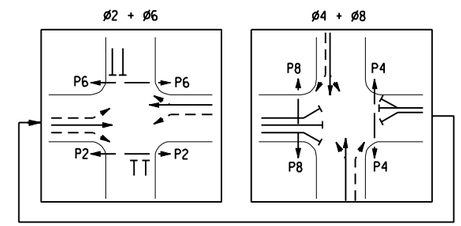

PHASING DIAGRAMS

NOT TO SCALE

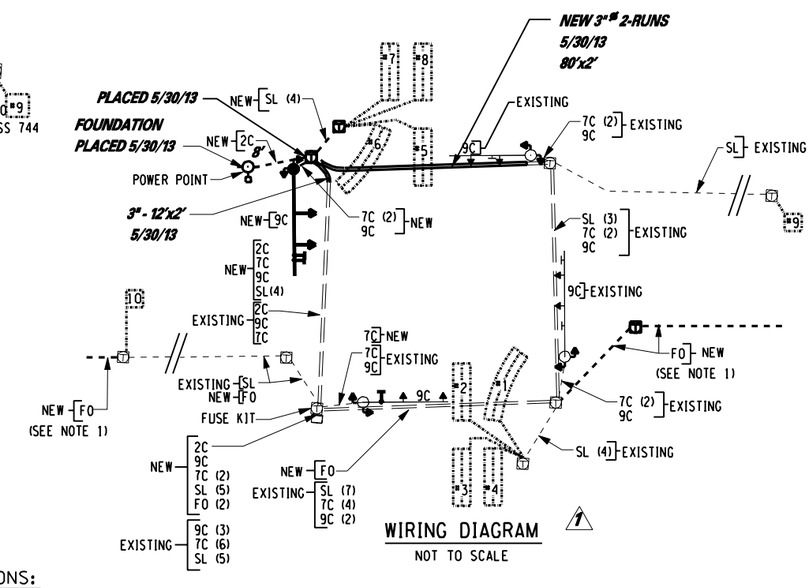

WIRING DIAGRAM

NOT TO SCALE

NOTES

1. REFER TO DWGS. PL-1 THROUGH PL-16 FOR FIBER OPTIC INTERCONNECT LAYOUT.

2. TRAFFIC SIGNS DENOTED WITH THE (DG³) DESIGNATION SHALL BE FABRICATED WITH MCDOT APPROVED DIAMOND GRADE CUBED REFLECTIVE SHEETING.

ABBREVIATIONS:

2C = 2 CONDUCTOR 6 AWG SERVICE CABLE (680.95020615)
7C = 7 CONDUCTOR 14 AWG SIGNAL CABLE (680.760714)
9C = 9 CONDUCTOR 14 AWG SIGNAL CABLE (680.760914)
SL = SHIELDED LEAD-IN CABLE (680.71)
FO = FIBER OPTIC 12 P (680.995101MO & 680.996101MO)

WESTFALL ROAD AND SAWGRASS DRIVE S-548

NO.	DATE	BY:	REVISION
1	10/17	JMW	REVISED WIRING DIAGRAM AND PLAN
2	10/17	JMW	SIGN DIMENSION

Barton & Loguidice, P.C.

DRAFTED BY: JMW/JJB
DESIGN BY: JMW

DEPARTMENT OF TRANSPORTATION
50 WEST MAIN STREET, SUITE 6100
ROCHESTER, NEW YORK 14614-1231

UNAUTHORIZED ALTERATION OR ADDITION TO THIS DRAWING IS A VIOLATION OF THE NEW YORK STATE EDUCATION LAW ARTICLE 145, SECTION 7209

PROJECT NAME: WESTFALL ROAD
LIMITS: E. HENRIETTA ROAD TO LAC-DE-VILLE BLVD
TOWN: BRIGHTON
CITY: ROCHESTER
CAPITAL PROJECT NO.: 4753.77
BRIDGE IDENTIFICATION NO.: N.A.

TRAFFIC SIGNAL PLAN

SCALE: AS SHOWN
DATE ISSUED: 4/25/2014
DRAWING NO. TSP-3
SHEET NO. 105 OF 112

mek
I:\MicroStation\Workspace\PLOT\NYSDOT\NYSDOT_SIZE_B.TBL
I:\MicroStation\Workspace\Plot\NYSDOT\NYSDOT_HPLJ5200_B.plt

FILE NAME = I:\Shared\1000\1066005\AS-BUILTS\1066005_tsp_03.dgn
DATE = 4/25/2014
TIME = 10:57:24 AM

TABLE OF OPERATIONS

PHASE	FACE 1	2	3	4	5	6	7	8	P2	P4	P6	P8
Ø1 + Ø5	R	R	R	R	←G	R	←G	R	HAND	HAND	HAND	HAND
Ø1 + Ø6	R	R	R	R	G ←G	G	R	R	HAND	HAND	PERSON	HAND
Ø2 + Ø5	R	R	R	R	R	R	G ←G	G	PERSON[1]	HAND	HAND	HAND
Ø2 + Ø6	R	R	R	R	G	G	G	G	PERSON[1]	HAND	PERSON	HAND
Ø3 + Ø7	←G	R	←G	R	R	R G→	R	R	HAND	HAND	HAND	HAND
Ø3 + Ø8	G ←G	G	R	R	R	R	R	R	HAND	HAND	HAND	PERSON
Ø4 + Ø7	R	R	G ←G	G	R	R	R	R	HAND	PERSON	HAND	HAND
Ø4 + Ø8	G	G	G	G	R	R	R	R	HAND	PERSON	HAND	PERSON
FLASHING	FR	FR	FR	FR	FR	FR	FR	FR	DARK	DARK	DARK	DARK
DISPLAY ALL LENSES SHALL BE 12" IN DIA.	R Y G ←G	R Y G	R Y G ←G	R Y G	R Y G ←G	R Y G	R Y G ←G	R Y G	HAND	88	HAND	88	HAND	88	HAND	88

1. THIS INDICATION SHALL BE A STEADY "WALKING PERSON" SYMBOL FOLLOWED BY A FLASHING "HAND" SYMBOL CLEARANCE INTERVAL, THEN A STEADY "HAND SYMBOL" WHEN THE ASSOCIATED PEDESTRIAN BUTTON IS ACTIVATED.

SIGNS TO BE INSTALLED

ITEM NUMBER	LOCATION	SIGN TEXT*	SIZE OF SIGN	M.U.T.C.D. NUMBER	TYPE OF MOUNT
680.8210 4 EA.	A	ONLY	2.5' x 3.0' 7.5 SF	R3-5L	OVERHEAD MAST ARM
680.8210 1 EA.	B	ONLY	2.5' x 3.0' 7.5 SF 6.0'x1'-8"	R3-5R	OVERHEAD MAST ARM
680.8210 1 EA.	C	WESTFALL	~~4.5' x 1.0' 4.5 SF~~	D3-1	OVERHEAD MAST ARM
680.8210 1 EA.	D	S. CLINTON	~~5.0' x 1.0' 5.0 SF~~	D3-1	OVERHEAD MAST ARM
*DG[3] SHEETING (SEE NOTE 2)			6.0'x1'-8"		

TABLE OF ITEM NUMBERS

ITEM NO.	DESCRIPTION	UNIT	QUANTITY
206.03	CONDUIT EXCAVATION AND BACKFILL INCLUDING SURFACE RESTORATION	LF	1490
619.1611	MAINTAIN TRAFFIC SIGNAL EQUIPMENT (REQUIREMENT C)	INT. MO.	6
680.5001	POLE EXCAVATION AND CONCRETE FOUNDATION	CY	18
680.5002	CONCRETE BASE FOR CONTROLLER CABINET	EACH	1
680.510301	PULLBOX - CIR., 24 IN. DIA., REINF. CONCRETE	EACH	2
680.510401	PULLBOX - CIR., 30 IN. DIA., REINF. CONCRETE	EACH	8
680.520106	CONDUIT, METAL STEEL ZINC COUATED - CLASS 1, 2 IN. DIA.	LF	25
680.520108	CONDUIT, METAL STEEL ZINC COATED - CLASS 1, 3 IN. DIA.	LF	950
680.520110	CONDUIT, METAL STEEL ZINC COATED, 4 NPS	LF	20
680.521606M0	2" PVC SCHEDULE 80 CONDUIT	LF	400
680.521610M0	4" PVC SCHEDULE 80 CONDUIT	LF	600
680.54	INDUCTANCE LOOP INSTALLATION & SEALING	LF	2460
680.700606	RISER ASSEMBLY, 2 IN. DIA.	EACH	1
680.71	SHIELDED LEAD-IN CABLE	LF	3740
680.72	INDUCTANCE LOOP WIRE	LF	4920
680.730714	SIGNAL CABLE, 7 CONDUCTORS, 14 AWG	LF	1115
680.730914	SIGNAL CABLE, 9 CONDUCTORS, 14 AWG	LF	640
680.79000010	REMOVE TRAFFIC SIGNAL EQUIPMENT	LS	1
680.802708M0	8 PHASE ACTUATED CONTROLLER & CABINET (PURCHASED FROM MCDOT)	EACH	1
680.809908M0	8 PHASE ACTUATED CONTROLLER & CABINET (PURCHASED FROM MCDOT)	EACH	1
680.810121M0	TRAFFIC SIGNAL MODULE - 12", RED BALL, LED	EACH	8
680.810123M0	TRAFFIC SIGNAL MODULE - 12", YELLOW BALL, LED	EACH	8
680.810125M0	TRAFFIC SIGNAL MODULE - 12", GREEN BALL, LED	EACH	8
680.810128M0	TRAFFIC SIGNAL MODULE - 12" BI-MODAL, YELLOW/GREEN ARROWS LED	EACH	5
680.810308	INSTALL LED BALL/ARROW TRAFFIC SIGNAL MODULE	EACH	29
680.810601	TRAFFIC SIGNAL SECTION, POLYCARBONATE, TYPE I, 12 INCH	EACH	29
680.8111	TRAFFIC BRACKET ASSEMBLY - 1 WAY	EACH	8
680.811618M0	16"x18" BI-MODAL PEDESTRIAN SIGNAL, HAND/MAN, WITH COUNTDOWN	EACH	8
680.813101M0	PEDESTRIAN PUSH BUTTON WITH SIGN	EACH	8
680.813104	INSTALL LED SIGNAL PEDESTRIAN MODULE	EACH	8
680.813106	PEDESTRIAN SIGNAL SECTION - POLYCARBONATE, TYPE I, 12 INCH	EACH	8
680.820030M0	MAST ARM TRAFFIC SIGNAL POLE COMBINATION ANCHOR BASE (30')	EACH	4
680.854000M0	MAST ARM TRAFFIC SIGNAL POLE, 40 FT. LENGTH	EACH	4
680.95020615	SERVICE CABLE, 2 CONDUTOR, 6 AWG	LF	40
680.994100M0	GALVANIZED STEEL PEDESTRIAN SIGNAL POLE	EACH	1
680.995101	FIBER-OPTIC CABLE (PURCHASED FROM MCDOT)	LF	800
680.995600M0	ROD AND CLEANOUT	LF	575
680.996101	INSTALL FIBER-OPTIC CABLE (FURNISHED BY MCDOT)	LF	800

INDUCTANCE LOOP TABLE

NO.	WIRED	FUNC-TION	SYSTEM SENSOR	SIZE	TURNS
1	DIRECT	Ø5		6 x 25	QUAD 2-4-2
2	DIRECT	Ø5		6 x 25	QUAD 2-4-2
3	DIRECT	Ø1		6 x 25	QUAD 2-4-2
4	DIRECT	Ø6		6 x 25	QUAD 2-4-2
5	DIRECT	Ø6		6 x 26	QUAD 2-4-2
6	DIRECT	Ø6		6 x 25	QUAD 2-4-2
7	DIRECT	Ø6		6 x 25	QUAD 2-4-2
8	DIRECT	Ø1		6 x 25	QUAD 2-4-2
9	DIRECT	Ø3		6 x 25	QUAD 2-4-2
10	DIRECT	Ø8		6 x 22	3
11	DIRECT	Ø8		6 x 20	3
12	DIRECT	Ø3		6 x 25	QUAD 2-4-2
13	DIRECT	Ø7		6 x 25	QUAD 2-4-2
14	DIRECT	Ø4		6 x 22	3
15	DIRECT	Ø4		6 x 20	3
16	DIRECT	Ø7		6 x 25	QUAD 2-4-2
17	DIRECT	Ø2	745	6 x 6	3
18	DIRECT	Ø6	746	6 x 6	3
19	DIRECT	Ø8	750	6 x 6	3
20	DIRECT	Ø8	751	6 x 6	3
21	DIRECT	Ø4	748	6 x 6	3
22	DIRECT	Ø4	749	6 x 6	3
23	DIRECT		747	6 x 6	3
24	DIRECT	Ø5		6 x 25	QUAD 2-4-2
25	DIRECT	Ø5		6 x 25	QUAD 2-4-2

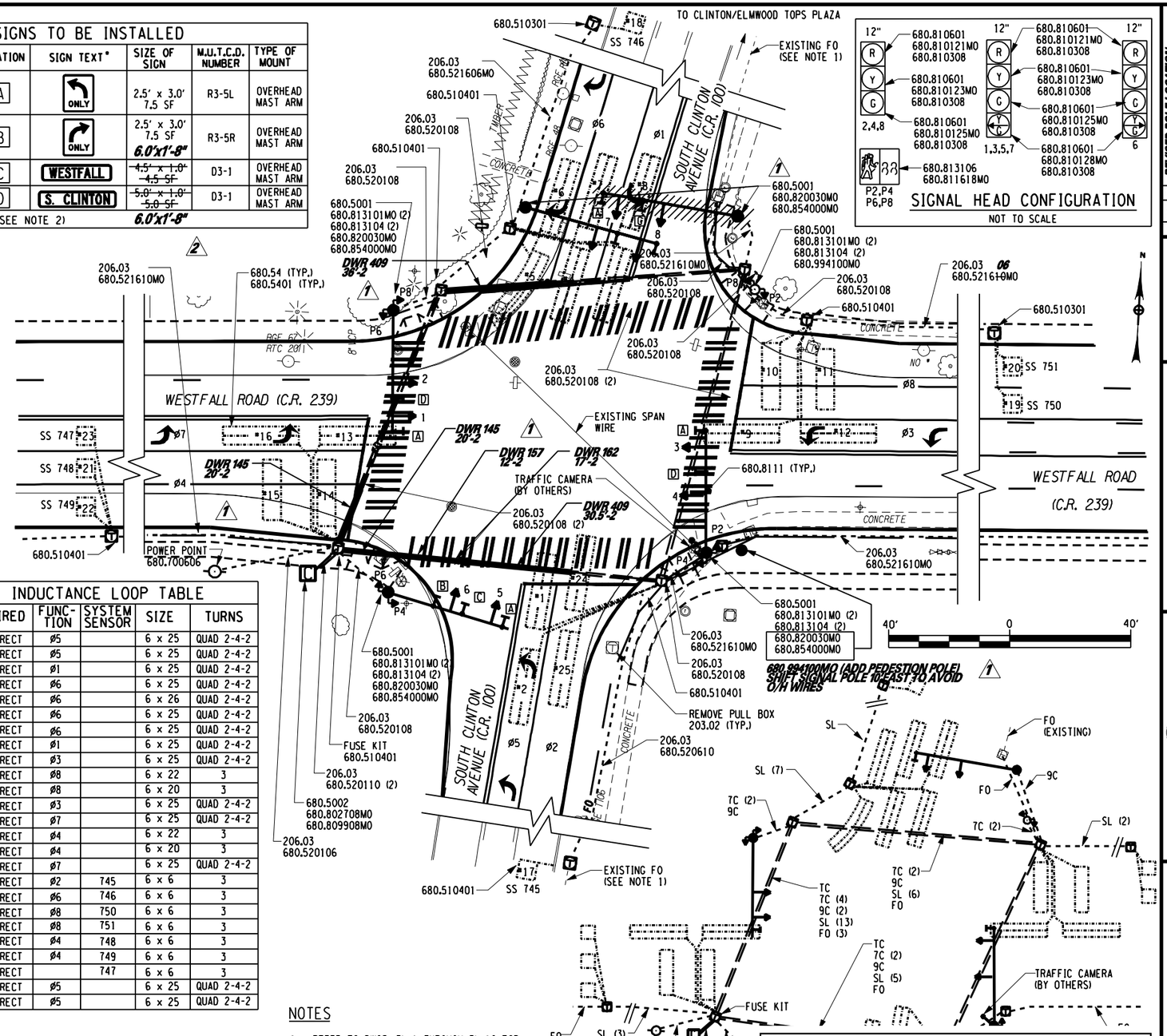

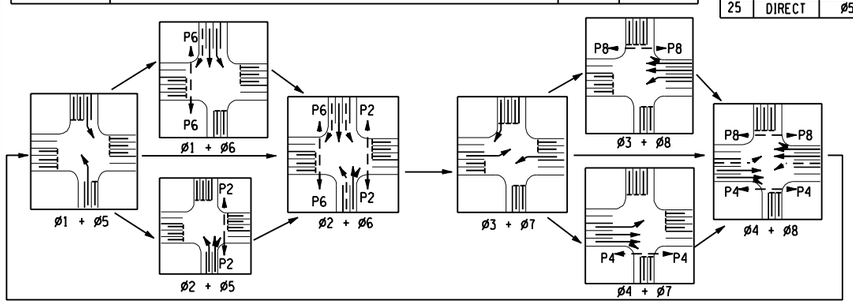

TABLE OF CLEARANCES

TO	FROM R	G	←G
R	R	Y	←Y
	R	R	R
G	R	G	←Y
	R	G	G
←G	R	G	←G
	R	G	←G

NOTES

1. REFER TO DWGS. PL-1 THROUGH PL-16 FOR FIBER OPTIC INTERCONNECT LAYOUT.
2. TRAFFIC SIGNS DENOTED WITH (DG[3]) DESIGNATED SHALL BE FABRICATED WITH MCDOT APPROVED DIAMOND GRADE CUBED REFLECTIVE SHEETING.

ABBREVIATIONS

2C = 2 CONDUCTOR 6 AWG SERVICE CABLE (680.95020615)
7C = 7 CONDUCTOR 14 AWG SIGNAL CABLE (680.760714)
9C = 9 CONDUCTOR 14 AWG SIGNAL CABLE (680.760914)
SL = SHIELDED LEAD-IN CABLE (680.71)
FO = FIBER OPTIC (680.995101M0 & 680.996101M0)
TC = TRAFFIC CAMERA WIRING (680.995101M0 & 680.996101M0)

"I hereby certify by my signature and seal below, that I have prepared this record drawing which is, to the best of my knowledge and in my professional opinion, a true representation of the work as constructed on the Westfall Road Improvements Phase III, Project No. 1409."

STATE OF NEW YORK · MATTHEW J. SCHOLLEY · No. 069983 · LICENSED PROFESSIONAL ENGINEER

NO.	DATE	BY:	REVISION
1	06/09	JMW	REVISED POLE LOCATION
2	06/09	JMW	SIGN DIMENSION

Barton & Loguidice, P.C.

DRAFTED BY: JMW/JJB
DESIGN BY: JMW

DEPARTMENT OF TRANSPORTATION
50 WEST MAIN STREET, SUITE 6100
ROCHESTER, NEW YORK 14614-1231

UNAUTHORIZED ALTERATION OR ADDITION TO THIS DRAWING IS A VIOLATION OF THE NEW YORK STATE EDUCATION LAW ARTICLE 145, SECTION 7209

PROJECT NAME: WESTFALL ROAD
LIMITS: E. HENRIETTA ROAD TO LAC-DE-VILLE BLVD
TOWN: BRIGHTON
CITY: ROCHESTER
CAPITAL PROJECT NO.: 4753.77
BRIDGE IDENTIFICATION NO.: N.A.

TRAFFIC SIGNAL PLAN

SCALE: AS SHOWN
DATE ISSUED: 4/25/2014
DRAWING NO. TSP-4
SHEET NO. 106 OF 112

mek
I:\MicroStation\Workspace\PLOT\NYSDOT\NYSDOT_SIZE_B.TBL
I:\MicroStation\Workspace\Plot\NYSDOT\NYSDOT_HPLJ5200_B.plt
FILE NAME = I:\Shared\1000\1066005\AS-BUILTS\1066005_tsP_04.dgn
DATE = 4/25/2014
TIME = 10:57:57 AM

"I hereby certify by my signature and seal below, that I have prepared this record drawing which is, to the best of my knowledge and in my professional opinion, a true representation of the work as constructed on the Westfall Road Improvements Phase III, Project No. 1409."

STATE OF NEW YORK · MATTHEW J. SCROBLEY · LICENSED PROFESSIONAL ENGINEER · No. 069985

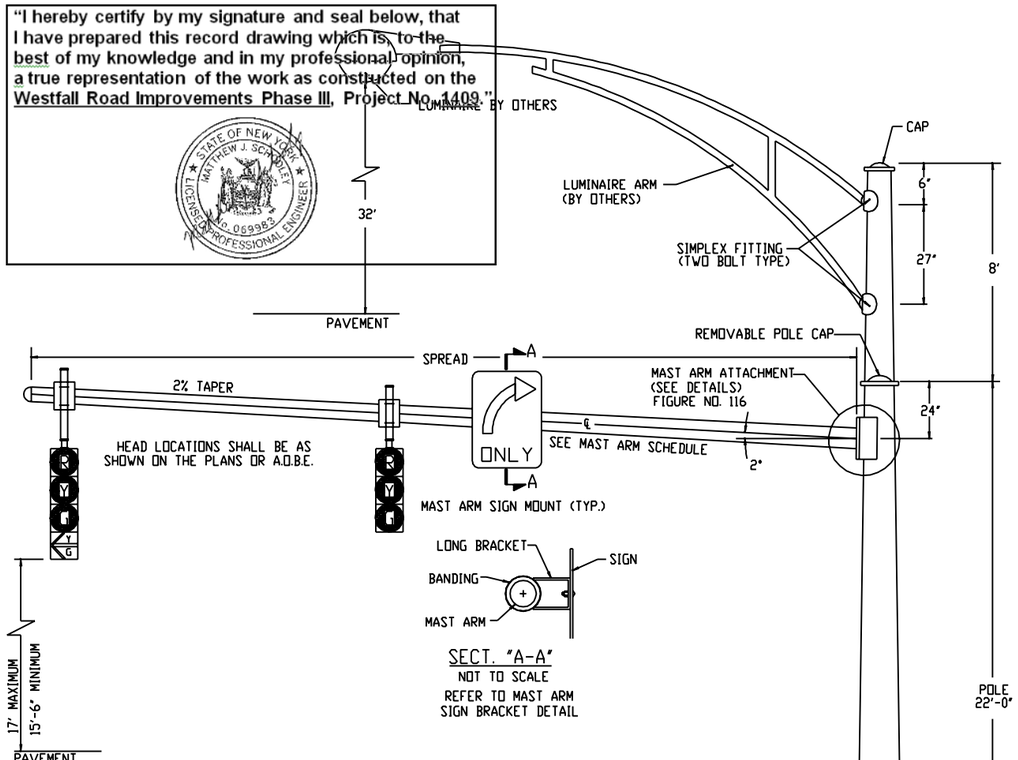

SECT. "A-A"
NOT TO SCALE
REFER TO MAST ARM SIGN BRACKET DETAIL

SIGNAL POLE NOTES

A. POLES SHALL BE ADJUSTED BY USE OF THE NUTS ON THE ANCHOR BOLTS SO THAT THEY ARE VERTICAL WHEN ALL SIGNAL HEADS AND SIGNS ARE INSTALLED.

B. POLES SHALL BE LOCATED NO CLOSER TO THE ROADWAY OR CURB THAN THE LINE OF FIXED OBJECTS IN THE IMMEDIATE AREA AND IN NO CASE LESS THAN 2' FROM THE ROADWAY OR CURB.

C. BEARING SURFACE OF HOLE SHALL BE UNDISTURBED GROUND OR COMPACTED SOIL. IF A FORM IS REQUIRED OR PRECAST BASE IS USED, IT SHALL BE AS A.O.B.E..

D. POLE FOUNDATION MAY BE REQUIRED TO BE NARROWED AND DEEPENED TO AVOID EXISTING UTILITIES IN SPECIFIC LOCATIONS. ALLOWANCE FOR ANY ADJUSTMENT NECESSARY TO BE INCLUDED IN PRICE BID FOR POLE FOUNDATION.

MAST ARM SCHEDULE

L	ARM	RESISTING MOMENT	FLANGE
10'	11E 6.0" x 4.60" x 10'-0"	12700 LB-FT	"Y" & "C"
12'	11E 6.0" x 4.32" x 12'-0"	12700 LB-FT	"Y" & "C"
14'	11E 6.0" x 4.04" x 14'-0"	12700 LB-FT	"Y" & "C"
16'	11E 6.0" x 3.76" x 16'-0"	12700 LB-FT	"Y" & "C"
18'	11E 6.0" x 4.48" x 18'-0"	12700 LB-FT	"Y" & "C"
20'	11E 6.0" x 3.20" x 20'-0"	12700 LB-FT	"Y" & "C"
22'	11E 7.0" x 3.92" x 22'-0"	17400 LB-FT	"Y" & "C"
24'	11E 7.0" x 3.64" x 24'-0"	17400 LB-FT	"Y" & "C"
26'	11E 7.0" x 3.36" x 26'-0"	17400 LB-FT	"Y" & "C"
28'	7E 8.0" x 4.06" x 28'-0"	33700 LB-FT	"C"
30'	7E 8.0" x 3.80" x 30'-0"	33700 LB-FT	"C"
32'	7E 8.0" x 3.52" x 32'-0"	33700 LB-FT	"C"
34'	7E 8.0" x 3.24" x 34'-0"	33700 LB-FT	"C"
36'	7E 8.25" x 3.24" x 36'-0"	33700 LB-FT	"C"
38'	7E 8.25" x 3.24" x 36'-0" + 11EB - 3.09" x 2.53" x 2'-0"	33700 LB-FT	"C"
40'	7E 8.25" x 3.24" x 36'-0" + 11EB - 3.09" x 2.53" x 4'-0"	33700 LB-FT	"C"
42'	7E 8.25" x 3.24" x 36'-0" + 11EB - 3.09" x 2.53" x 6'-0"	33700 LB-FT	"C"

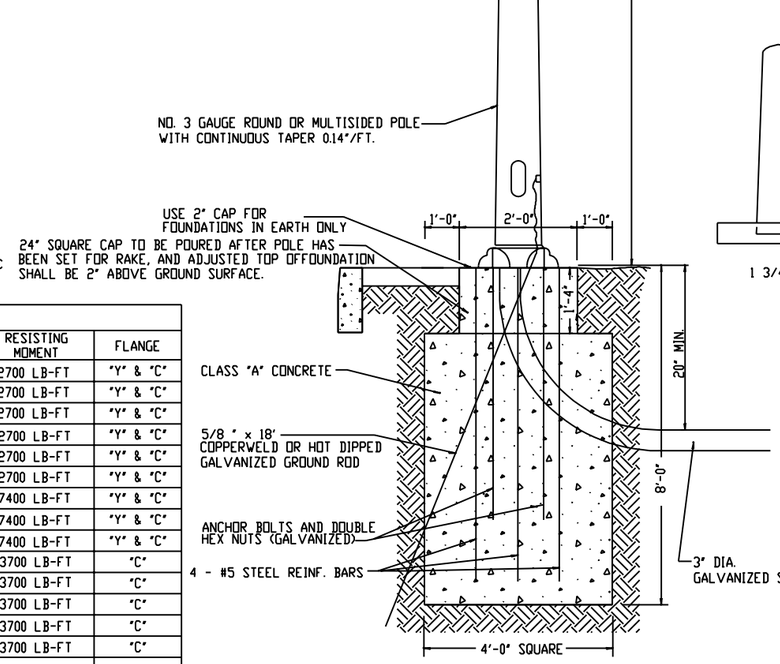

SIGNAL POLE INSTALLATION
MAST ARM
NOT TO SCALE

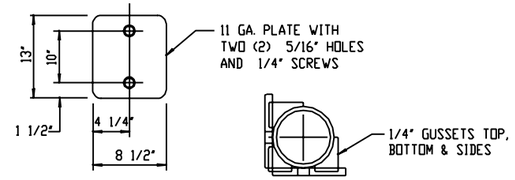

TWO SCREWS & ONE COVER PLATE WITH EACH POLE
NOT TO SCALE

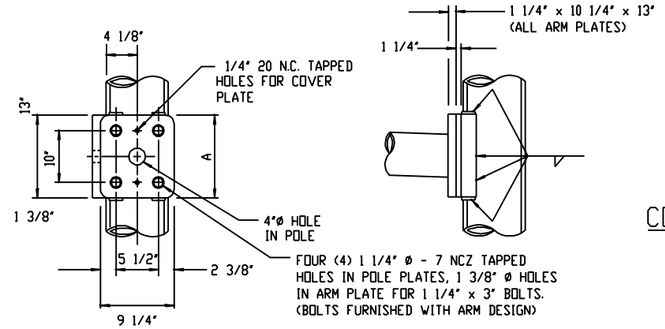

MAST ARM ATTACHMENT
NOT TO SCALE

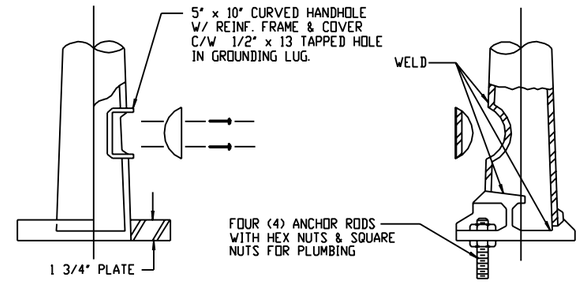

NOTE:
POLE MUST BE CONNECTED TO GROUND ROD.

HANDHOLE
NOT TO SCALE

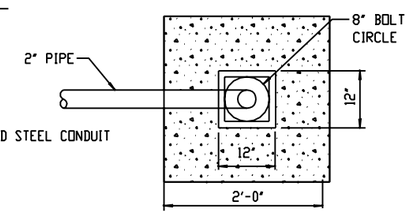

TOP VIEW

CONCRETE BASE FOR PEDESTRIAN SIGNAL POLE
NOT TO SCALE

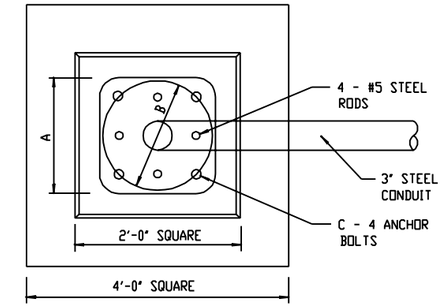

FLANGE	A	B	C
"C"	15 5/8"	15"	1 3/4" x 90"
"Y"	14 1/8"	13 1/2"	1 1/2" x 60"

NOTES:
1. CONDUIT SHALL BE 4" STEEL WITH POLE USED FOR "J" CABINET INSTALLATION.
2. FOR ADDITIONAL DETAILS, REFER TO SIGNAL POLE INSTALLATION DETAIL.

CONCRETE SIGNAL POLE BASE-PLAN VIEW
NOT TO SCALE

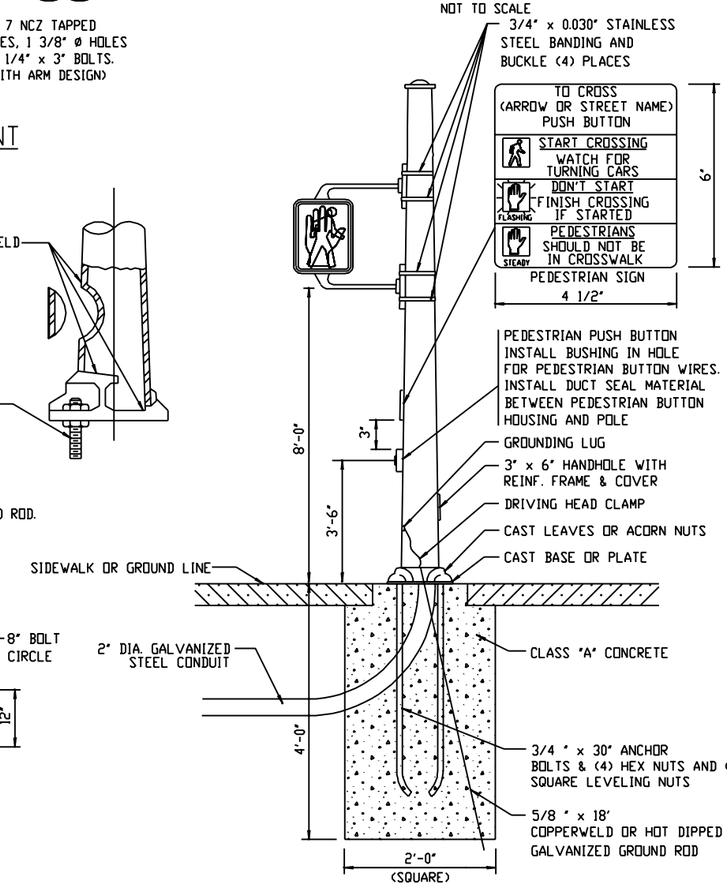

PEDESTRIAN SIGNAL POLE WITH STANDARD PEDESTRIAN SIGNAL
NOT TO SCALE

NO AS-BUILT REVISIONS

NO.	DATE	BY:	REVISION

Barton & Loguidice, P.C.

DRAFTED BY: JMW/JJB
DESIGN BY: JMW

DEPARTMENT OF TRANSPORTATION
50 WEST MAIN STREET, SUITE 6100
ROCHESTER, NEW YORK 14614-1231

UNAUTHORIZED ALTERATION OR ADDITION TO THIS DRAWING IS A VIOLATION OF THE NEW YORK STATE EDUCATION LAW ARTICLE 145, SECTION 7209

PROJECT NAME: WESTFALL ROAD
LIMITS: E. HENRIETTA ROAD TO LAC-DE-VILLE BLVD
TOWN: BRIGHTON
CITY: ROCHESTER
CAPITAL PROJECT NO.: 4753.77
BRIDGE IDENTIFICATION NO.: N.A.

TRAFFIC SIGNAL DETAILS

SCALE: NO SCALE
DATE ISSUED: 4/25/2014
DRAWING NO. TSP-5
SHEET NO. 107 OF 112

mek
I:\MicroStation\Workspace\PLOT\NYSDOT\NYSDOT_SIZE_B.TBL
I:\MicroStation\Workspace\Plot\NYSDOT\NYSDOT_HPLJ5200_B.plt

FILE NAME = I:\Shared\1000\10660005\AS-BUILTS\10660005_tsp_05.dgn
DATE = 4/25/2014
TIME = 10:58:28 AM

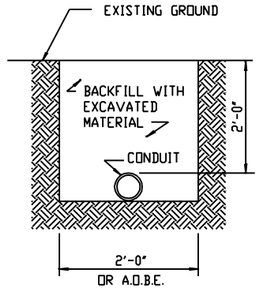

EXCAVATION IN EARTH

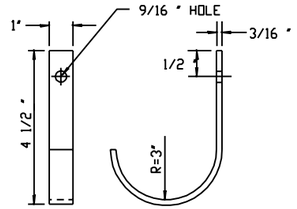

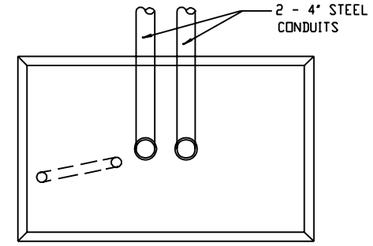

FRONT OR REAR CONDUIT EXIT

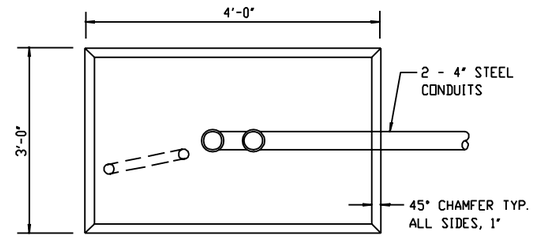

SIDE CONDUIT EXIT

CONCRETE CONTROLLER BASE - CONDUIT EXITS

NOT TO SCALE

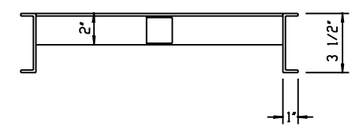

TOP VIEW

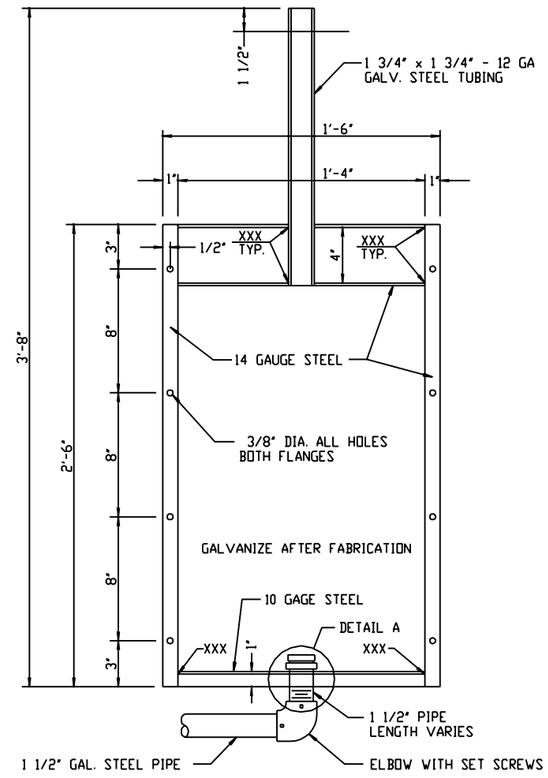

FRONT VIEW

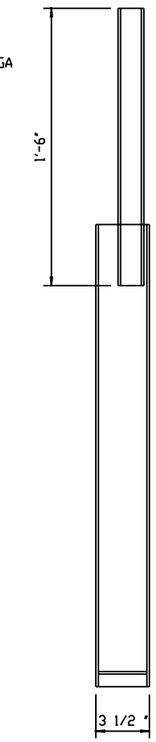

SIDE VIEW

TRAFFIC CONDUIT INSTALLATION

NOT TO SCALE

STEEL CABLE BRACKET SUPPORT (HOT DIPPED GALVANIZED)

NOT TO SCALE

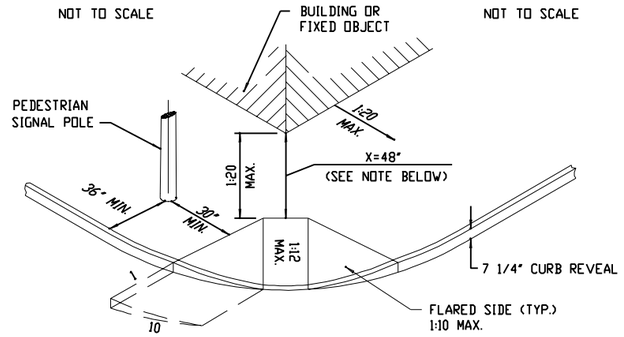

NOTE:
IF < 48", THEN THE SLOPE OF THE FLARED SIDES SHALL NOT EXCEED 1:12.

PEDESTRIAN SIGNAL WITH RAMP

NOT TO SCALE

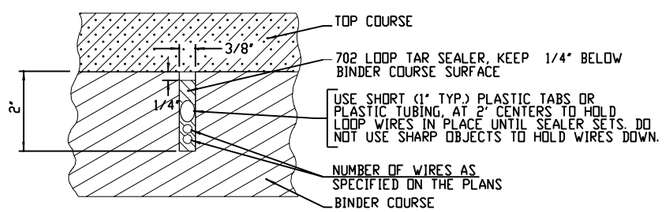

INDUCTANCE LOOP SAW CUT IN ASPHALT BINDER

NOT TO SCALE

NOTES:

1. IN UNPAVED AREAS A CONCRETE WORK PAD SHALL BE PLACED IN FRONT OF THE CABINET DOOR.

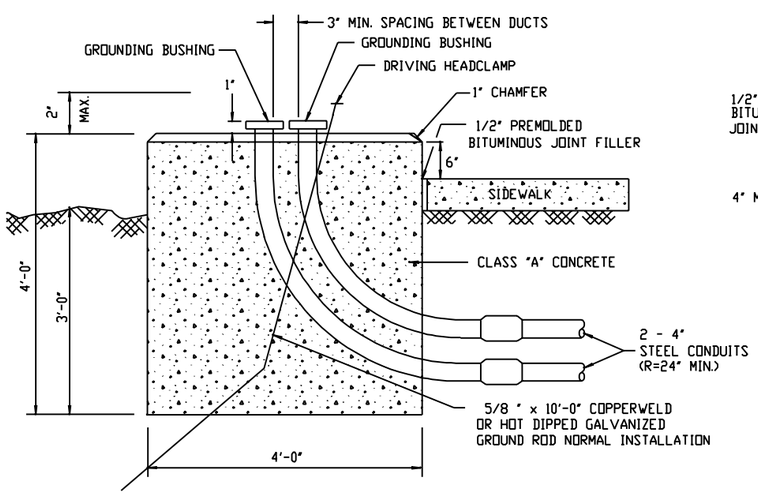

CONCRETE BASE FOR CONTROLLER - VIEW B

NOT TO SCALE

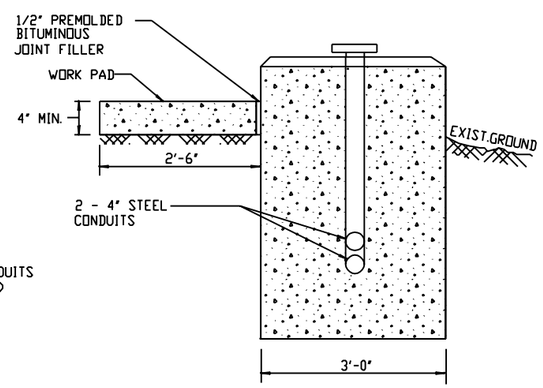

CONCRETE BASE FOR CONTROLLER - VIEW A

NOT TO SCALE

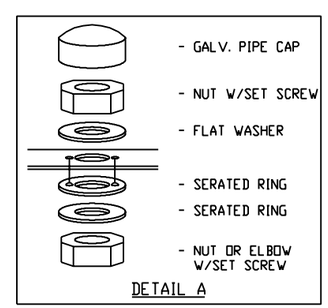

DETAIL A

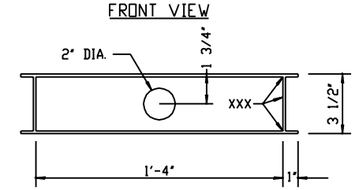

SIGN MOUNT BRACKET

NOT TO SCALE

"I hereby certify by my signature and seal below, that I have prepared this record drawing which is, to the best of my knowledge and in my professional opinion, a true representation of the work as constructed on the Westfall Road Improvements Phase III, Project No. 1409."

STATE OF NEW YORK · MATTHEW J. SCHMITT · 069983 · LICENSED PROFESSIONAL ENGINEER

NO.	DATE	BY:	REVISION
NO AS-BUILT REVISIONS			

Barton & Loguidice, P.C.

DRAFTED BY: JMW/JJB
DESIGN BY: JMW

DEPARTMENT OF TRANSPORTATION
50 WEST MAIN STREET, SUITE 6100
ROCHESTER, NEW YORK 14614-1231

UNAUTHORIZED ALTERATION OR ADDITION TO THIS DRAWING IS A VIOLATION OF THE NEW YORK STATE EDUCATION LAW ARTICLE 145, SECTION 7209

PROJECT NAME: WESTFALL ROAD
LIMITS: E. HENRIETTA ROAD TO LAC-DE-VILLE BLVD
TOWN: BRIGHTON
CITY: ROCHESTER
CAPITAL PROJECT NO.: 4753.77
BRIDGE IDENTIFICATION NO.: N.A.

TRAFFIC SIGNAL DETAILS

SCALE: NO SCALE
DATE ISSUED: 4/25/2014
DRAWING NO. TSP-6
SHEET NO. 108 OF 112

mek
I:\MicroStation\Workspace\PLOT\NYSDOT\NYSDOT_SIZE_B.TBL
I:\MicroStation\Workspace\Plot\NYSDOT\NYSDOT_HPLJ5200_B.plt

FILE NAME = I:\Shared\1000\10660005\AS-BUILTS\10660005_tsp_06.dgn
DATE = 4/25/2014
TIME = 10:58:57 AM

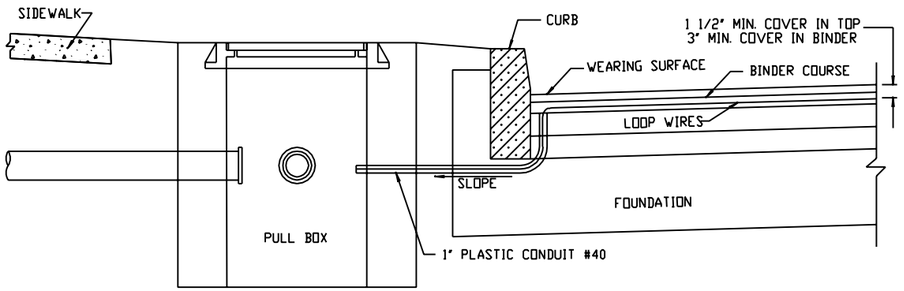

LOOP DETECTOR INSTALLATION TO PULL BOX
NOT TO SCALE

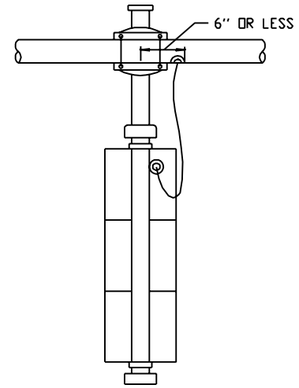

RIGID SIGNAL HEAD MOUNTING - REAR VIEW
NOT TO SCALE

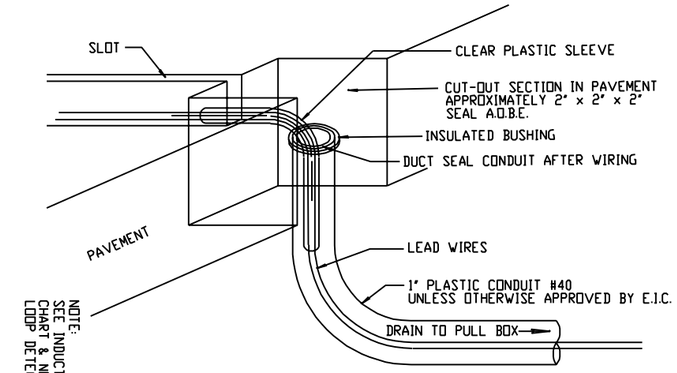

NOTE:
SEE INDUCTANCE LOOP CHART & NOTES FOR LOOP DETECTOR NOTES.

LOOP DETECTOR IN CURB SECTION
NOT TO SCALE

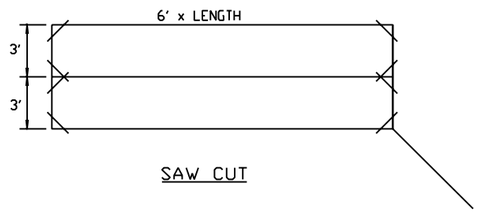

SAW CUT

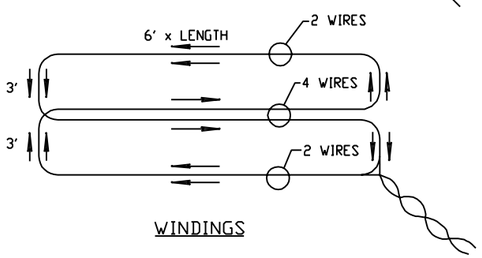

WINDINGS

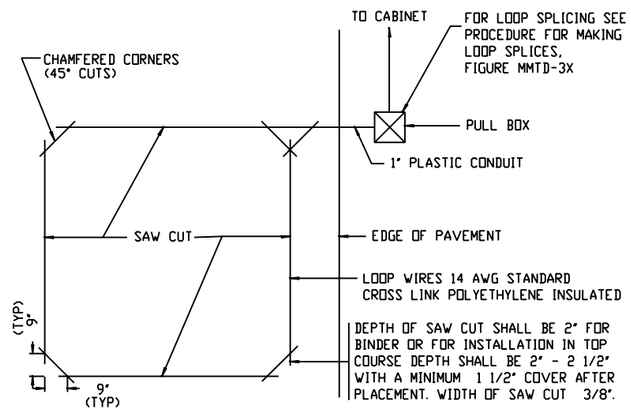

INDUCTANCE LOOP INSTALLATION
NOT TO SCALE

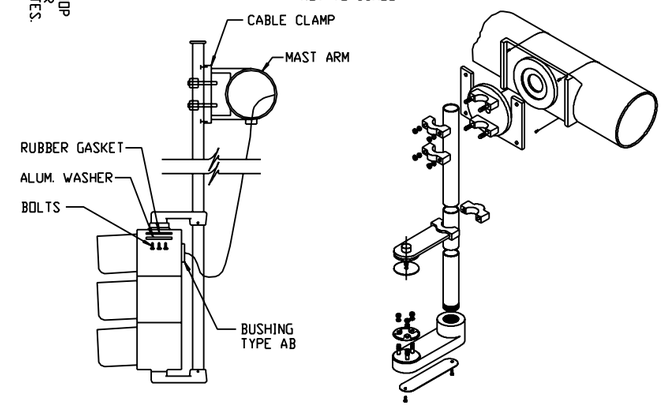

RIGID SIGNAL HEAD MOUNTING
NOT TO SCALE

QUADRUPLE LOOP INSTALLATION
NOT TO SCALE

"I hereby certify by my signature and seal below, that I have prepared this record drawing which is, to the best of my knowledge and in my professional opinion, a true representation of the work as constructed on the Westfall Road Improvements Phase III, Project No. 1409."

STATE OF NEW YORK · MATTHEW J. SCHUSTER · LICENSED PROFESSIONAL ENGINEER · NO. 069983

PROCEDURE FOR MAKING LOOP SPLICES

1. BARE WIRE ENDS TO BE SPLICED WITH INSULATED BUTT SPLICE
2. RUBBER TAPE EACH SPLICE ONCE(1).
3. INSTALL WIRES IN SPLICE KIT 3-M SLIC 5 COMMUNICATIONS KIT OR APPROVED EQUIVALENT.

LOOP DETECTOR NOTES

1. ALL SAWED CHANNELS SHALL BE STRAIGHT AND TO THE DEPTH AND LENGTHS INDICATED OR CALLED FOR BY THE ENGINEER OR DRAWING.
2. CORNER CUTS SHALL BE MADE ON A 45° ANGLE WITH 2" LEGS ON THE LOOP.
3. EACH LOOP SHALL CONSIST OF ONE (1) CONTINUOUS LENGTH OF WIRE RUNNING AROUND THE LOOP FROM AND RETURNING TO THE PULL BOX.
4. THE NUMBER OF TURNS AROUND THE LOOP WILL BE A.O.B.E.
5. THE CONTRACTOR MUST PROVIDE A MANUFACTURER'S CERTIFICATION THAT THE EQUIPMENT FURNISHED WILL OPERATE THE SPECIFIED SIZE OF LOOPS AND LEAD-IN LENGTHS SHOWN.
6. ALL LOOP SEALANT MATERIAL SHALL BE APPROVED BY THE ENGINEER.
7. ALL LOOPS SHALL BE PLACED IN THE BINDER COURSE OF ASPHALT A.O.B.E.

NOTES

A. STEEL SPACER UNITS (QTY. 2) TO BE USED WHEN FASTENING TO TAPPED HOLE OR WHEN LAG SCREWS USED (WOOD POLE) SO THAT HEX HEAD OF BOLT CAN BE SERVICED WITH HEX SOCKET.

B. CONDUIT ENTRANCE OPTION. ICC P/N 4825 PROVIDES TAPPED 1/2 " INCH CONDUIT ENTRANCES BOTH LEFT OR RIGHT SIDES FOR EXTERNAL ENTRANCE TO CLAMSHELL.

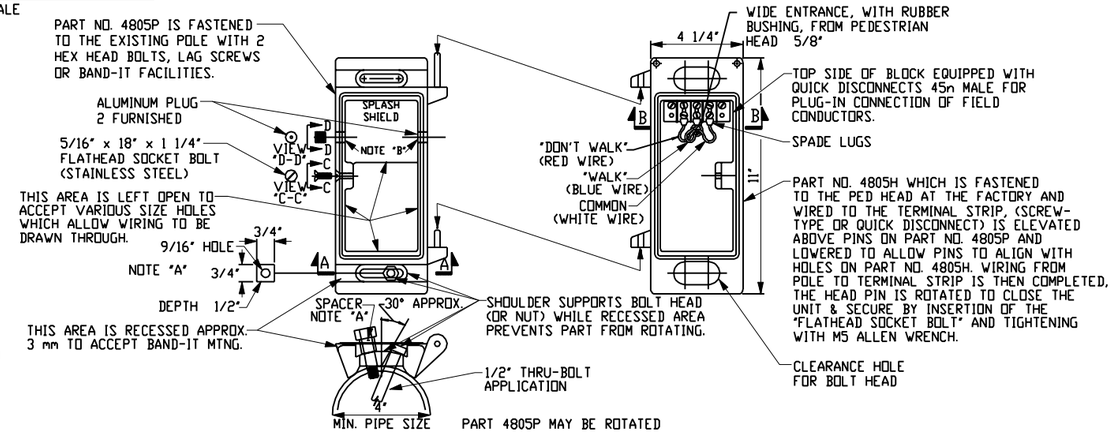

SECTION "A-A"

SECTION "B-B"

CLAMSHELL PEDESTRIAN SIGNAL BRACKET MOUNT
NOT TO SCALE

INDUCTANCE LOOP CHART & NOTES

SIZE (6') x_____ = NUMBER OF TURNS OF LOOP WIRE

LOOP LENGTH	6'	8'	10'	12'	14'	16'	18'	20'	22'	24'	26'	28'	30'	35'	40'	45'	50'	55'	60'	65'	& ABOVE
TURNS	3	3	3	3	3	3	3	3	3	2	2	2	2	2	2	2	2	2	2	2	2

ALL LOOPS DIRECTLY WIRED TO CONTROLLER, NOTHING IN PARALLEL.

NO.	DATE	BY:	REVISION

NO AS-BUILT REVISIONS

Barton & Loguidice, P.C.

DRAFTED BY: JMW/JJB
DESIGN BY: JMW

DEPARTMENT OF TRANSPORTATION
50 WEST MAIN STREET, SUITE 6100
ROCHESTER, NEW YORK 14614-1231

UNAUTHORIZED ALTERATION OR ADDITION TO THIS DRAWING IS A VIOLATION OF THE NEW YORK STATE EDUCATION LAW ARTICLE 145, SECTION 7209

PROJECT NAME: WESTFALL ROAD
LIMITS: E. HENRIETTA ROAD TO LAC-DE-VILLE BLVD
TOWN: BRIGHTON
CITY: ROCHESTER
CAPITAL PROJECT NO.: 4753.77
BRIDGE IDENTIFICATION NO.: N.A.

TRAFFIC SIGNAL DETAILS

SCALE: NO SCALE
DATE ISSUED: 4/25/2014
DRAWING NO. TSP-7
SHEET NO. 109 OF 112

mek
I:\MicroStation\Workspace\PLOT\NYSDOT\NYSDOT_SIZE_B.TBL
I:\MicroStation\Workspace\Plot\NYSDOT\NYSDOT_HPLJ5200_B.plt
FILE NAME = I:\Shared\1000\1066005\AS-BUILTS\1066005_tsp_07.dgn
DATE = 4/25/2014
TIME = 10:59:27 AM

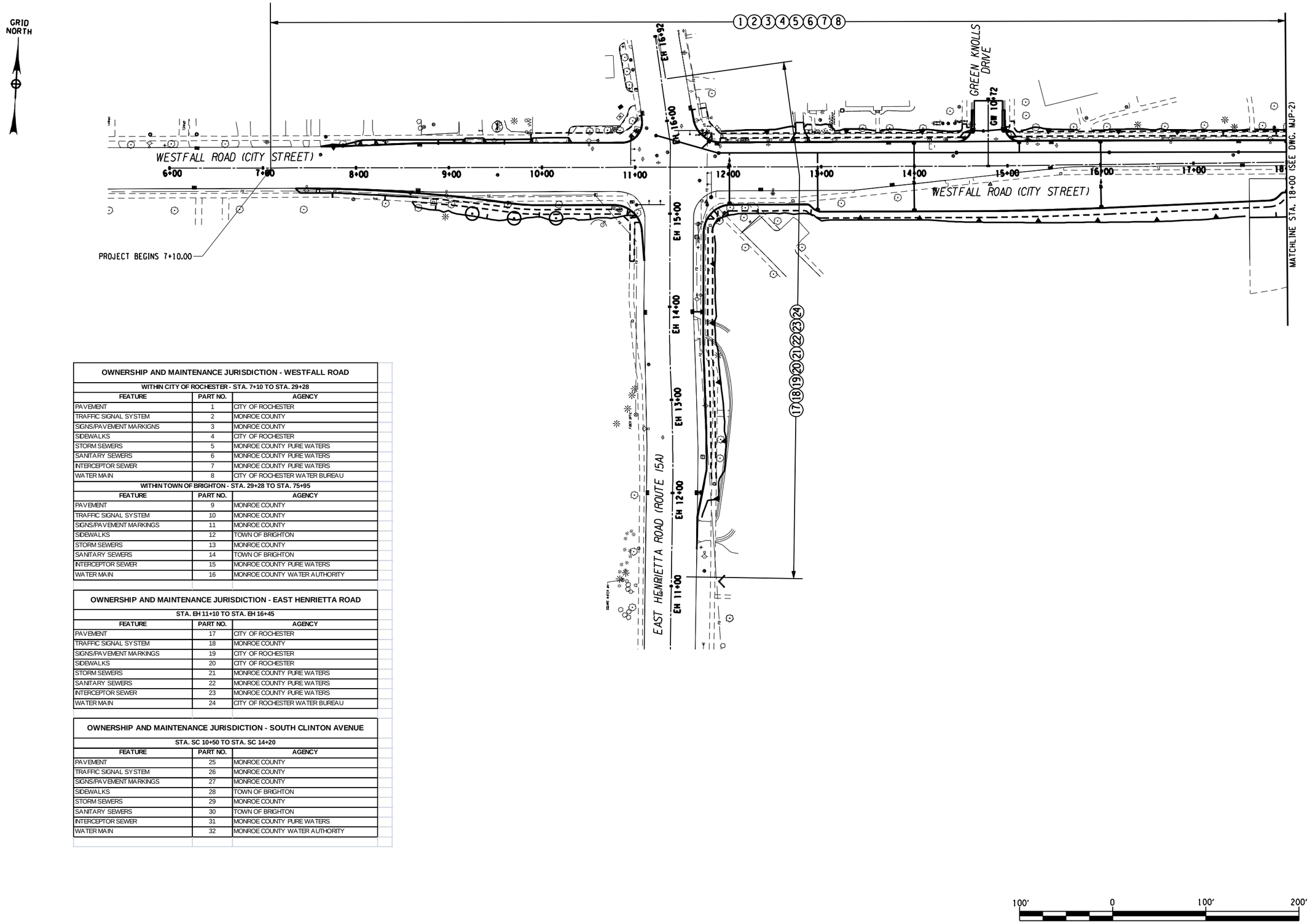

OWNERSHIP AND MAINTENANCE JURISDICTION - WESTFALL ROAD		
WITHIN CITY OF ROCHESTER - STA. 7+10 TO STA. 29+28		
FEATURE	PART NO.	AGENCY
PAVEMENT	1	CITY OF ROCHESTER
TRAFFIC SIGNAL SYSTEM	2	MONROE COUNTY
SIGNS/PAVEMENT MARKIGNS	3	MONROE COUNTY
SIDEWALKS	4	CITY OF ROCHESTER
STORM SEWERS	5	MONROE COUNTY PURE WATERS
SANITARY SEWERS	6	MONROE COUNTY PURE WATERS
INTERCEPTOR SEWER	7	MONROE COUNTY PURE WATERS
WATER MAIN	8	CITY OF ROCHESTER WATER BUREAU
WITHIN TOWN OF BRIGHTON - STA. 29+28 TO STA. 75+95		
FEATURE	PART NO.	AGENCY
PAVEMENT	9	MONROE COUNTY
TRAFFIC SIGNAL SYSTEM	10	MONROE COUNTY
SIGNS/PAVEMENT MARKINGS	11	MONROE COUNTY
SIDEWALKS	12	TOWN OF BRIGHTON
STORM SEWERS	13	MONROE COUNTY
SANITARY SEWERS	14	TOWN OF BRIGHTON
INTERCEPTOR SEWER	15	MONROE COUNTY PURE WATERS
WATER MAIN	16	MONROE COUNTY WATER AUTHORITY

OWNERSHIP AND MAINTENANCE JURISDICTION - EAST HENRIETTA ROAD		
STA. EH 11+10 TO STA. EH 16+45		
FEATURE	PART NO.	AGENCY
PAVEMENT	17	CITY OF ROCHESTER
TRAFFIC SIGNAL SYSTEM	18	MONROE COUNTY
SIGNS/PAVEMENT MARKINGS	19	CITY OF ROCHESTER
SIDEWALKS	20	CITY OF ROCHESTER
STORM SEWERS	21	MONROE COUNTY PURE WATERS
SANITARY SEWERS	22	MONROE COUNTY PURE WATERS
INTERCEPTOR SEWER	23	MONROE COUNTY PURE WATERS
WATER MAIN	24	CITY OF ROCHESTER WATER BUREAU

OWNERSHIP AND MAINTENANCE JURISDICTION - SOUTH CLINTON AVENUE		
STA. SC 10+50 TO STA. SC 14+20		
FEATURE	PART NO.	AGENCY
PAVEMENT	25	MONROE COUNTY
TRAFFIC SIGNAL SYSTEM	26	MONROE COUNTY
SIGNS/PAVEMENT MARKINGS	27	MONROE COUNTY
SIDEWALKS	28	TOWN OF BRIGHTON
STORM SEWERS	29	MONROE COUNTY
SANITARY SEWERS	30	TOWN OF BRIGHTON
INTERCEPTOR SEWER	31	MONROE COUNTY PURE WATERS
WATER MAIN	32	MONROE COUNTY WATER AUTHORITY

NO AS-BUILT REVISIONS

NO.	DATE	BY:	REVISION

Barton & Loguidice, P.C.

DRAFTED BY: JMW/JJB
DESIGN BY: JMW

DEPARTMENT OF TRANSPORTATION
50 WEST MAIN STREET, SUITE 6100
ROCHESTER, NEW YORK 14614-1231

UNAUTHORIZED ALTERATION OR ADDITION TO THIS DRAWING IS A VIOLATION OF THE NEW YORK STATE EDUCATION LAW ARTICLE 145, SECTION 7209

PROJECT NAME: WESTFALL ROAD
LIMITS: E. HENRIETTA ROAD TO LAC-DE-VILLE BLVD
TOWN: BRIGHTON
CITY: ROCHESTER
CAPITAL PROJECT NO.: 4753.77
BRIDGE IDENTIFICATION NO.: N.A.

MAINTENANCE JURISDICTION PLAN

SCALE: AS SHOWN
DATE ISSUED: 4/25/2014
DRAWING NO. MJP-1
SHEET NO. 110 OF 112

mek
I:\MicroStation\Workspace\PLOT\NYSDOT\NYSDOT_SIZE_B.TBL
I:\MicroStation\Workspace\Plot\NYSDOT\NYSDOT_HPLJ5200_B.plt

FILE NAME = I:\Shared\1000\1066005\AS-BUILTS\1066005_mjp_01.dgn
DATE = 4/25/2014
TIME = 11:01:01 AM

mek
I:\MicroStation\Workspace\PLOT\NYSDOT\NYSDOT_SIZE_B.TBL
I:\MicroStation\Workspace\Plot\NYSDOT\NYSDOT_HPLJ5200_B.plt

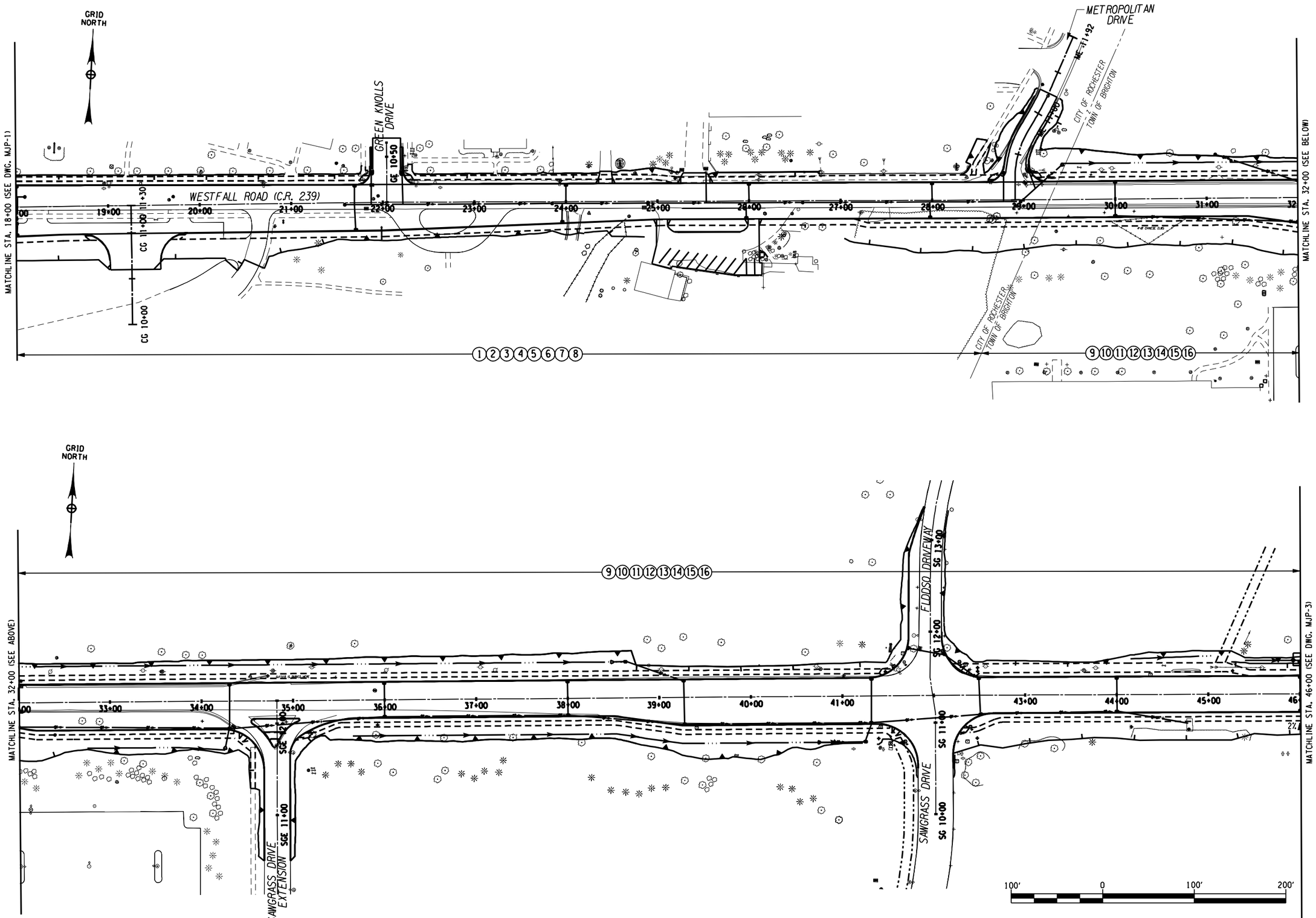

FILE NAME = I:\Shared\1000\1066005\AS-BUILTS\1066005_mjp_02.dgn
DATE = 4/25/2014
TIME = 11:01:32 AM

NO.	DATE	BY:	REVISION
NO AS-BUILT REVISIONS			

Barton & Loguidice, P.C.

DRAFTED BY: JMW/JJB
DESIGN BY: JMW

DEPARTMENT OF TRANSPORTATION
50 WEST MAIN STREET, SUITE 6100
ROCHESTER, NEW YORK 14614-1231

UNAUTHORIZED ALTERATION OR ADDITION TO THIS DRAWING IS A VIOLATION OF THE NEW YORK STATE EDUCATION LAW ARTICLE 145, SECTION 7209

PROJECT NAME: WESTFALL ROAD
LIMITS: E. HENRIETTA ROAD TO LAC-DE-VILLE BLVD
TOWN: BRIGHTON
CITY: ROCHESTER
CAPITAL PROJECT NO.: 4753.77
BRIDGE IDENTIFICATION NO.: N.A.

MAINTENANCE JURISDICTION PLAN

SCALE: AS SHOWN
DATE ISSUED: 4/25/2014
DRAWING NO. MJP-2
SHEET NO. 111 OF 112

mek
I:\MicroStation\Workspace\PLOT\NYSDOT\NYSDOT_SIZE_B.TBL
I:\MicroStation\Workspace\Plot\NYSDOT\NYSDOT_HPLJ5200_B.plt

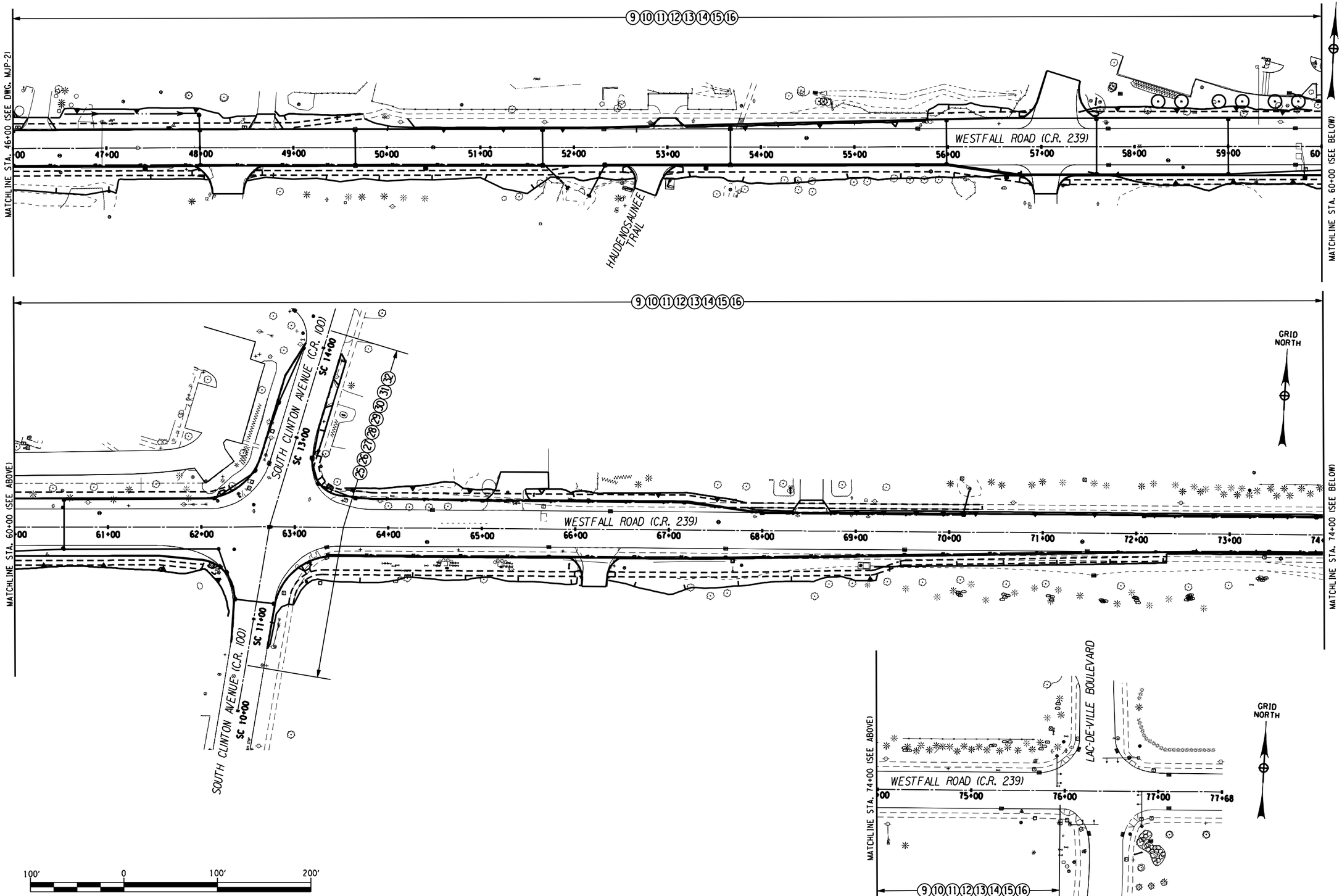

FILE NAME = I:\Shared\1000\1066005\AS-BUILTS\1066005_mjp_03.dgn
DATE = 4/25/2014
TIME = 11:02:08 AM

NO.	DATE	BY:	REVISION

NO AS-BUILT REVISIONS

Barton & Loguidice, P.C.

DRAFTED BY: JMW/JJB
DESIGN BY: JMW

DEPARTMENT OF TRANSPORTATION
50 WEST MAIN STREET, SUITE 6100
ROCHESTER, NEW YORK 14614-1231

UNAUTHORIZED ALTERATION OR ADDITION TO THIS DRAWING IS A VIOLATION OF THE NEW YORK STATE EDUCATION LAW ARTICLE 145, SECTION 7209

PROJECT NAME: WESTFALL ROAD
LIMITS: E. HENRIETTA ROAD TO LAC-DE-VILLE BLVD
TOWN: BRIGHTON
CITY: ROCHESTER
CAPITAL PROJECT NO.: 4753.77
BRIDGE IDENTIFICATION NO.: N.A.

MAINTENANCE JURISDICTION PLAN

SCALE: AS SHOWN
DATE ISSUED: 4/25/2014
DRAWING NO. MJP-3
SHEET NO. 112 OF 112